United States Patent [19]

Andeweg

[11] **3,761,702**

[45] **Sept. 25, 1973**

[54] **INTERNALLY ILLUMINATED CANDLE**

[76] Inventor: **Frits J. Andeweg,** 7737 Royal Ln., Dallas, Tex. 75230

[22] Filed: **Dec. 27, 1971**

[21] Appl. No.: **212,107**

[52] **U.S. Cl.** ..... **240/2 R,** 240/10 B

[51] **Int. Cl.** **F21v 33/00**

[58] **Field of Search** ..... 240/2 R, 10 B, 10.64, 240/13, 106 R; 431/289

[56] **References Cited**

UNITED STATES PATENTS

1,955,042	4/1934	Work	240/10
2,435,811	2/1948	Waters	240/10
2,509,219	5/1950	Desmond et al.	240/10
2,316,589	4/1943	Iwanowicz	240/10

FOREIGN PATENTS OR APPLICATIONS

327,549	3/1919	Germany	431/289
1,032,053	6/1953	France	240/10

Primary Examiner—Samuel S. Matthews
Assistant Examiner—Michael L. Gellner
Attorney—Warren H. Kintzinger

[57] **ABSTRACT**

An internally illuminated candle burnable from the top having a cavity within wax of the candle and a light structure positioned for illuminating the cavity and diffused passage of light through candle wax. The candle is made to glow with an esthetically pleasing internal light. It has a non-flamable barrier at the base of the wick.

14 Claims, 16 Drawing Figures

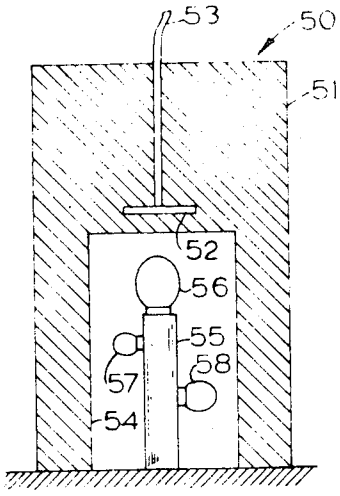

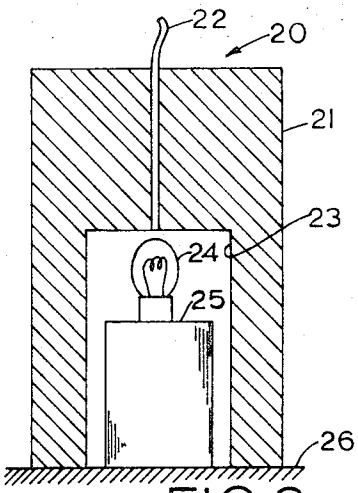

FIG. 3.

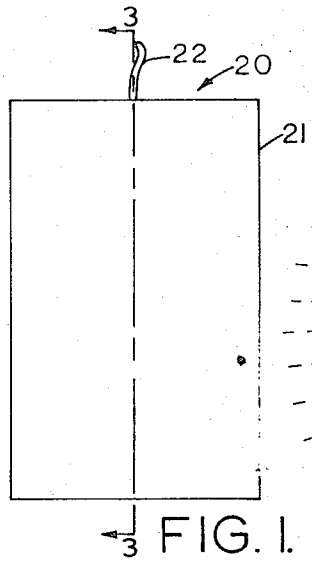

FIG. 1.

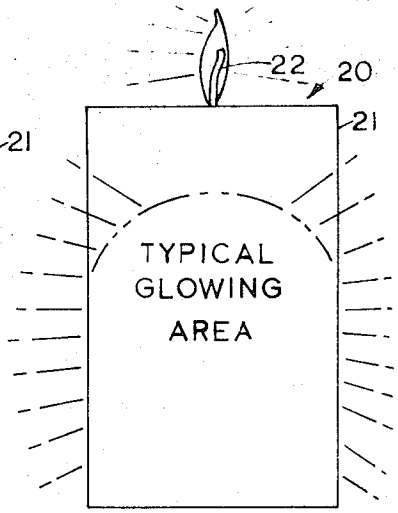

FIG. 2.

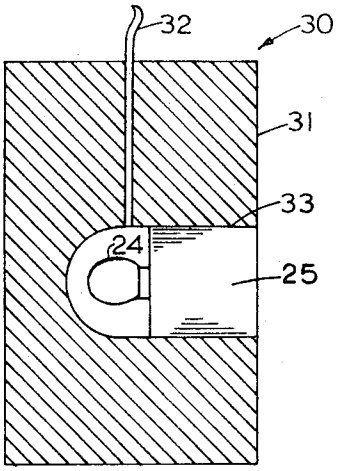

FIG. 5.

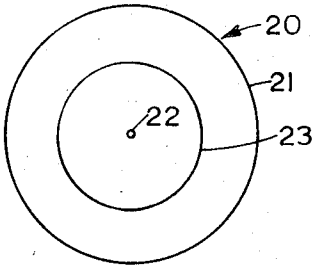

FIG. 4.

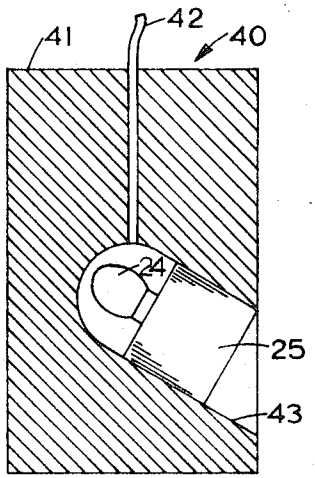

FIG. 6.

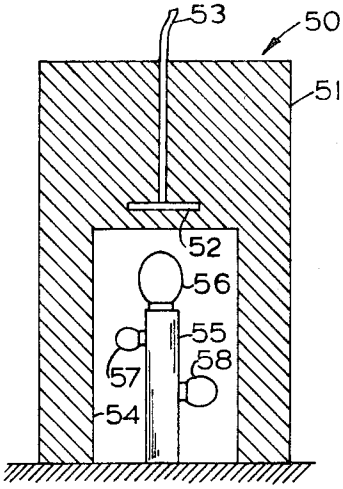

FIG. 7.

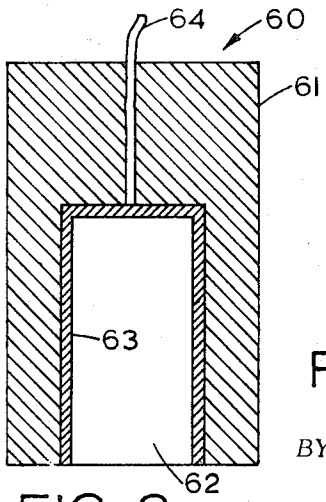

FIG. 8.

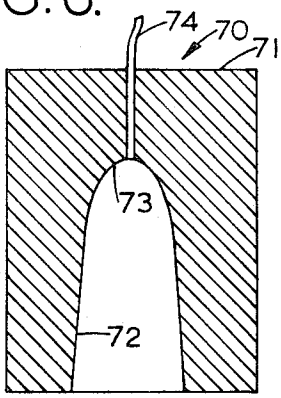

FIG. 9.

INVENTOR.
FRITS J. ANDEWEG
BY
Warren H. Kintzinger
ATTORNEY

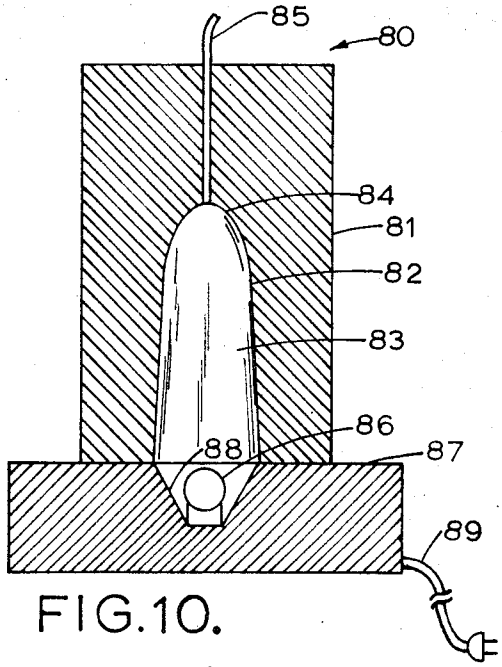

FIG.10.

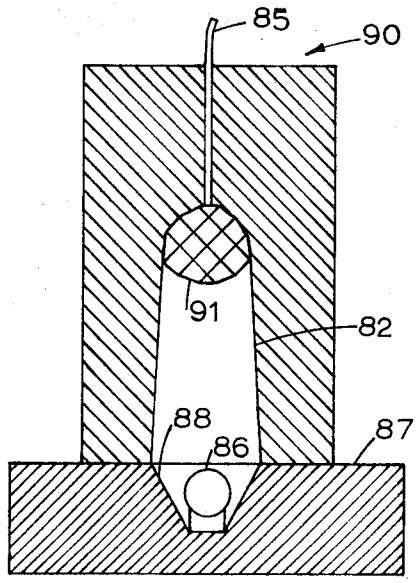

FIG.11

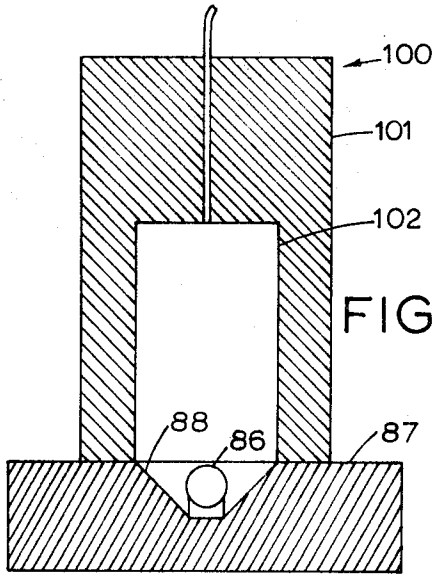

FIG.12.

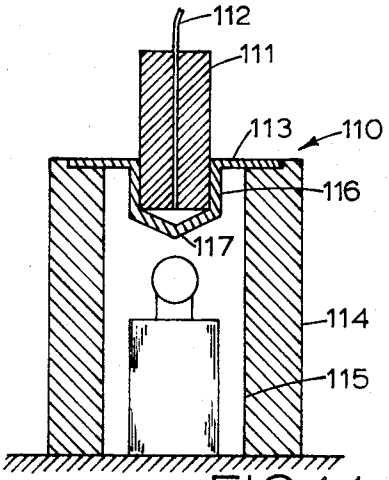

FIG.14.

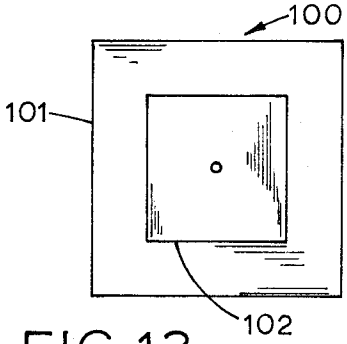

FIG.13.

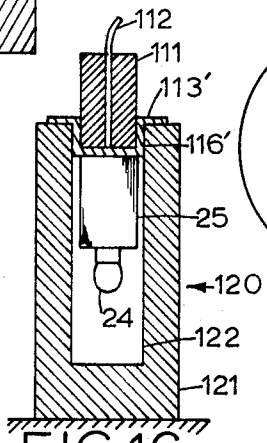

FIG.16.

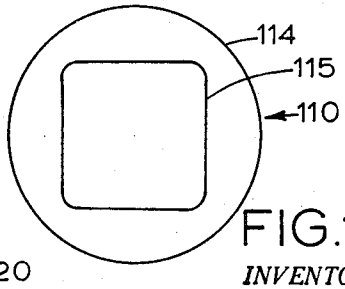

FIG.15.

INVENTOR.
FRITS J. ANDEWEG
BY
Warren H. Kintzinger
ATTORNEY

INTERNALLY ILLUMINATED CANDLE

This invention relates in general to wax candles, and in particular, to internally illuminated candles each with a light source illuminating a cavity within wax of a candle capable of being burned from the top in a conventional manner.

Candles come in many shapes and sizes that are very attractive indeed. Visualize, if you will, how much more beautiful most, if not all, candles would be if, in addition, to a burnable top they were made to glow with an internal light. Such internal glow through the candle wax of the candle would greatly enhance the esthetic beauty of candles whether they are burning or not. Candles so illuminated may employ flashing or otherwise varied lighting, including color varied internal lighting, to provide infinitely variable illuminated candles beautiful as centerpiece candles. They are so striking in many uses as to command the center of attention so much as to be in greater demand than conventional candles without internal illumination.

It is therefore, a principal object of this invention to provide candles capable of burning from the top conditioned for internal illumination.

A further object is to provide illumination light source means in any of a variety of light generating devices adapted for generating the internal illumination for such candles howsoever they may be conditioned for internal illumination.

Another object of such candles is that the illumination light source be a non-flammable light source.

Still another object is that some of light sources include a power source such as a battery with the light source and battery contained as a unit within the candle.

A further object is to provide for light diffusion within a candle and to provide light source means external to the candle shining to the candle interior and diffusion within the candle for the desired internally illuminated effect.

Features of the invention useful in accomplishing the above objects include, in internally illuminated candles, an internal cavity within the stem or body of the candle and a light source structure that supplies light diffused through wax of the candle body or wax stem. The internal cavity may protrude into the candle body from the base or in some versions from a side of the candle body depending on the different structural candle shapes and possible applications desired. Further, the cavity may be shaped as desired for different candle wax thickness and thickness varied intensity of internal illumination. The light source, such as a light bulb, may be inserted within the candle cavity along with a power supply or have electric power wires extending to the exterior to a power source. The light source may be external to the candle with generally a focusing structure directing a focused beam of light to light diffusing or reflecting structure within the candle. Internal diffusing structure within the candle may be merely shaping of the candle body wax cavity end upon which a directed beam of light shines, a plastic or glass sheath or solid inserts within the candle cavity, and/or light reflectors or multi-faceted crystals also supported within the candle body cavity.

Specific embodiments representing what are presently regarded as the best modes of carrying out the invention are illustrated in the accompanying drawings.

In the drawings:

FIG. **1** represents a side elevation view of a candle with a standard wick burnable from the top;

FIG. **2**, a side elevation view of a candle burning from the top that is also glowing from internal illumination;

FIG. **3**, a cut away and sectioned side view taken along line **3—3** of FIG. **1** showing interior detail of a candle body interior cavity extended from the base of the candle and including an inserted electric light with base that may include a self contained battery or possibly have wire connections extended to the exterior;

FIG. **4**, a bottom view of the candle of FIG. **1** showing a candle body interior cavity therein;

FIG. **5**, a partially cut away and sectioned view of a candle with an internal cavity extended to the body interior from a body side;

FIG. **6**, a partially cut away and sectioned view of a candle with the internal cavity extended to the body interior at a slant from the body side;

FIG. **7**, a partially cut away and sectioned view of a candle with a disc of non-flammable material beneath the lower end of the wick and above an internal cavity containing more than one non-flammable light source;

FIG. **8**, a cut away and sectioned view of a candle with an internal cavity that includes an inserted sheath of non-flammable plastic, glass or other material as required;

FIG. **9**, a view of a candle in section showing a tapered cavity;

FIG. **10**, a view of a candle in section with a light transmitting material insert illuminated from beneath;

FIG. **11**, a view of a candle in section with a multi-faceted crystal supported within the candle body cavity and lighted by light directed from below;

FIG. **12**, a view of a rectangular candle in section with a rectangular cavity;

FIG. **13**, a bottom view of the candle body of FIG. **12**;

FIG. **14**, a partially cut away and sectioned view of a candle with an internally illuminated hollow wax body mounting a burning candle section support at the top;

FIG. **15**, a bottom view of the candle body of FIG. **14**; and

FIG. **16**, a partially cut away and sectioned view of a candle with a wax body hollow from the top.

Referring to the drawings:

The candle **20** of FIG. **1** has a wax body **21** and a wick **22** for burning extended from the top of the wax body **21**. The candle **20**, in addition to having a burnable top wick **22**, is equipped to glow from within with a typical glowing area such as illustrated in FIG. **2**. In order that the candle **20** may have such an internal glow the wax body **21** is equipped with an internal cavity **23** extended upward within the candle body **21** as shown in FIG. **3** where body **21** is in section but inserts in cavity **23** are not in section. The cavity **23** is of adequate size and extends upward for a material distance such that a light bulb **24** and a self contained battery power supply pack assembly **25** mounting bulb **24** are completely contained therein over the candle **20** supporting surface **26**. With this candle **20** the internal cavity **23** is circular in a cross section as shown in the bottom view of FIG. **4** although it could be rectangular or some other shape if required for some desired lighting effects or purposes as may be imposed. The candle body **21** could also be rectangular cross-section instead of circular in cross section.

With the candle **30** of FIG. **5** shown only in side elevation sectioned view, similar to FIG. **3**, having a wax body **31** and a burnable top wick **32** the internal cavity **33** extends horizontally from the side of the body **31** to the interior. A light bulb **24** and battery power supply pack assembly **25**, such as used with the candle **20** of FIG. **3**, are inserted into the internal cavity **33**.

The candle **40** embodiment of FIG. **6** is quite similar to that of FIG. **5** with a candle wax body **41** having a wick **42** and a cavity **43** extended to the body interior at a slant from the body side. Light bulb **24** and battery power supply pack assembly **25** may be used with this embodiment.

In the candle **50** of FIG. **7** the candle body **51** includes a non-flammable disc **52** at the lower end of wick **53** to prevent burning of the wick into the internal cavity **54** with dropping of melted wax and wick remnants into the cavity **54**. The internal light source structure **55** is shown to support a plurality of electric light bulbs **56, 57,** and **58** of different sizes and shapes. The bulbs **56, 57** and **58** may be of the same size and power or not and of the same or different colors as may be desired for different effects. While the internal light source structure **55** may include a self contained battery power pack alternately power supply line connections may be instead provided extending to an external power source, detail not shown.

With the candle **60** of FIG. **8** the wax body **61** has an internal cavity **62** lined by a sheath of none-flammable transparent material **63** about which the candle wax may be poured as the candle is formed. The shealh of non-flammable transparent material **63** prevents the wick **64** from burning down into the internal cavity **62**. Further, the sheath **63** may have special light distributing or filtering qualities for light emanating from a light source contained therewithin or for light directed therein from an external source.

In the candle **70** of FIG. **9** the candle wax body **71** has a tapered cavity **72** extended from the bottom of the body and ending in a domed top **73** at the bottom of wick **74**.

With the candle **80** of FIG. **10** the wax body **81** has a cavity **82** filled by a tapered body of material **83** terminating in a domed top **84** under the bottom of wick **85**. While the tapered body of material **83** in some instances would also be wax having greater light transmitting and distributing qualitites than the wax of body **81** it is, in many instances, a plastic body either inserted in place or the candle wax may be poured about the body **83** as the candle is formed. The tapered body **83** may also be a glass material, in any event, it may be any of various colors, and may assume other shapes such as to fit other candle body cavities. In FIG. **10** a below the candle bottom light bulb source **86** is mounted in candle mounting base **87** that may be a self contained power source for the light bulb **86** within a reflector **88** positioned to direct light up through the body of material **83** or have a power line **89** for supply of power from an external source.

With the candle **90** of FIG. **11**, much the same as the embodiment of FIG. **10**, some identification numbers are the same as a matter of convenience, a multifaceted crystaline body **91** is inserted in cavity **82**. Light from light bulb **86** is also directed by reflector **88** illuminates crystaline body **91** for responsive crystaline body internal illumination of the candle was body **81**.

The candle **100** of FIG. **12** may be much the same as the candle of FIGS. **1–4** with, however, the body **101** internal cavity **102** being illuminated from below by a below the candle bottom light bulb source **86** such as used with the candles of FIGS. **10** and **11**. Here, again the candle mounting base **87** uses a light bulb positioned within a reflector **88** for directing light upward within the candle cavity **102**. The candle body **101** and the cavity **102** of candle **100** are shown to be both rectangular in cross section by the bottom view of the candle **100** of FIG. **13**. However, either the body itself or the cavity could be square, rectangular, or round or other shape and any mix thereof as desired.

The candle **110** of FIGS. **14** and **15**, shown in side elevation sectioned view in FIGs. **14** similar to FIG. **3**, has burnable wax portion **111**, with a wick **112**, mounted in a holder **113** supported on the top of a wax body **114**. The wax body **114** has a center cavity **115** extended therethrough from top to bottom into which the downward depending bottom extension **116** of holder **113** extends from the top. The bottom surface **117** of holder **113** is, with some candles, a highly reflective surface shaped to optimize reflected light to the candle body wall for optimized internal illumination of the candle. While the candle body **114** and the cavity **115** could both be circular in cross section, or both rectangular, the body **114** is shown to be circular and the cavity **115** rectangular in the bottom view of FIG. **15**. Furthermore, the light source structure may be any one of those shown with the embodiments of FIGS. **3, 7, 10, 11, 12** within, as shown, or from below the candle body **114**, or even with an internal suspended light source as shown with the candle embodiment of FIG. **16**.

With the candle **120** of FIG. **16** a wax body **121**, in side elevation sectioned view, is shown to have an internal cavity **122** extended downwardly from the top of the body **121** within which the bottom extension **116'** of holder **113'** is received. Holder **113'** mounts burnable wax portion **111**, with a wick **112**, on the of wax body **121**, and supports a self contained battery power supply pack assembly **25**, supplying power for light bulb **24**, with a bonding adhesive holding the assembly **25** on the bottom of the extension **116'**.

It should be noted that various combinations of features of the various embodiments could be combined in various other combinations as may be desired in attaining various attractive esthetic effects in internally illuminating wax candles having a burnable top portion. Some of applicant's candles have been equipped with a rotating colred glass or plastic sheath mounted to rotate around a light source contained within a candle wax body cavity and driven by rising heated air from a light bulb, and in other cases such a sheath may be driven in rotation by a motor (detail not shown).

Whereas this invention is herein illustrated and described with respect to a plurality of embodiments thereof, it should be realized that various changes may be made without departing from the essential contributions to the art made by the teachings hereof.

I claim:

1. In a candle structure having a wick for burning at the top and adapted for internal illumination: a candle body structure; a burnable candle wax portion supported by said candle body structure generally at the top of said candle body structure; said wick being imbedded within said burnable candle wax portion and

extending from the top of said burnable candle wax portion; a cavity of substantial size within said candle body structure generally below said burnable candle wax portion; non-flammable barrier means positioned below the bottom of said wick in the region of the top of said cavity; said candle body structure including a candle wax body substantially surrounding said cavity; and with said cavity of sufficient size, shaped and positioned to receive internal illumination means for internal illumination of substantially the entire candle body by a light source independent of said wick burning at the top of the candle.

2. The candle structure of claim **1**, wherein non-flammable light source means is contained within said cavity.

3. The candle structure of claim **2**, wherein said non-flammable light source means includes a plurality of non-flammable light sources.

4. The candle structure of claim **2**, wherein a combined light source and a power supply is contained in said cavity.

5. The candle structure of claim **4**, wherein said cavity is a downward extending cavity from th top of said body structure; and said combined light source and power supply is contained in said cavity below said burnable wax portion

6. The candle structure of claim **5**, wherein said burnable wax portion is held by holder means mounted on said body structure; and said combined light source and power supply is suspended from said holder means.

7. The candle structure of claim **5**, wherein said cavity extends through said candle body structure from top to bottom; and said burnable wax portion is held by holder means mounted on said candle body structure.

8. The candle structure of claim **1**, wherein said cavity is irregularly shaped with varied candle body structure wall thicknesses provided for varied light intensities through the candle body structure wall when internal illumination is provided in said cavity.

9. The candle structure of claim **1**, wherein said cavity extends through said candle body structure from top to bottom; said burnable wax portion is held by holder means mounted on said candle body structure; and with light spreading means on the underside of said holder means.

10. The candle structure of claim **1**, wherein light spreading means is contained within said cavity.

11. The candle structure of claim **10**, wherein said light spreading means is a multi-faceted crystal for spreading light to and through the walls of said candle wax body that originates from a light source positioned for dircting light to said crystal.

12. The candle structure of claim **10**, wherein said light spreading means is a transparent material insert in said cavity.

13. The candle structure of claim **12**, wherein said light spreading means is a solid transparent material insert completely filling said cavity; and light source means is positioned to direct light into and through said insert.

14. The candle structure of claim **12**, wherin said light spreading means is a transparent non-flammable material sheath inserted in said cavity.

* * * * *