(19) DANMARK

(10) DK/EP 2619104 T3

(12) Oversættelse af europæisk patentskrift

Patent- og Varemærkestyrelsen

(51) Int.Cl.: *B 65 D 25/00 (2006.01)* *B 65 D 6/18 (2006.01)* *B 65 D 85/30 (2006.01)*

(45) Oversættelsen bekendtgjort den: **2017-12-04**

(80) Dato for Den Europæiske Patentmyndigheds bekendtgørelse om meddelelse af patentet: **2017-08-30**

(86) Europæisk ansøgning nr.: **10755170.7**

(86) Europæisk indleveringsdag: **2010-09-20**

(87) Den europæiske ansøgnings publiceringsdag: **2013-07-31**

(86) International ansøgning nr.: **EP2010063807**

(87) Internationalt publikationsnr.: **WO2012037962**

(84) Designerede stater: **AL AT BE BG CH CY CZ DE DK EE ES FI FR GB GR HR HU IE IS IT LI LT LU LV MC MK MT NL NO PL PT RO SE SI SK SM TR**

(73) Patenthaver: **IFCO Systems GmbH, Zugspitzstrasse 7, 82049 Pullach, Tyskland**

(72) Opfinder: **ORGELDINGER, Wolfgang, Balanstrasse 89d, 81539 München, Tyskland**
DELBROUCK, Klaus, Franz-Liszt-Strasse 6, 50825 Köln, Tyskland

(74) Fuldmægtig i Danmark: **Larsen & Birkeholm A/S Skandinavisk Patentbureau, Banegårdspladsen 1, 1570 København V, Danmark**

(54) Benævnelse: **Transport- og præsentationskasse**

(56) Fremdragne publikationer:
EP-A1- 1 637 470
WO-A1-94/11264
GB-A- 2 175 882
US-B1- 6 601 724

European Application Number: 10 755 170.7

Transport and Presentation Box

Description

The present invention relates to boxes for the transport of goods which enable to present the goods transported in the box to a consumer and facilitate access to the goods in the box to the same.

A plurality of products is transported in boxes which are open to the top. For example, a plurality of different box shapes are known in beverage industry to transport beverage bottles or smaller containers of beverage bottles (for example so called "sixpacks") from the production to retailers. In retail, the boxes are usually stacked, so that access is only possible from the top and thus products which are located in a box which is located in a bottom position in the stack may only be accessed when all boxes located above the same are removed. This is extremely uncomfortable, strenuous and time consuming. Further, such boxes are generally only designed for the transport of goods of a certain type, like e.g. bottles, so that for the transport of other goods other boxes have to be used.

US 6,601,724 B1 discloses a box according to the preamble to claim 1.

It would thus be an advantage to provide boxes which enable a more efficient and simple access to products transported in the box.

According to the present invention, a box thus comprises a base or bottom and at least two pairs of respectively opposite side walls, wherein a first one of the side walls is implemented so that it enables a removal of products contained in the box. For this purpose, the first side wall extends from the bottom in the vertical direction at least partially by only a lower retrieval height to the top which is lower than the height of one or several of the remaining side walls. The retrieval height is determined so that from the first side wall a lateral opening is defined with a dimension which enables an access or the retrieval of products contained in the box through the lateral opening.

According to a first aspect, embodiments of the invention provide a box of the above mentioned implementation which further includes a locking element which extends between the two opposite side walls which abut on the first side wall, and which is movable between a first position and a second position, wherein the locking element is arranged in the first position between the opposing side walls and spaced apart from the first side wall, wherein the locking element is arranged in the second position overlapping with the first side wall.

The locking element, according to embodiments, includes a bracket extending between the opposing side walls, and two struts arranged at the two opposing ends of the bracket, wherein a first end of the struts is arranged at the opposing ends of the bracket, and wherein a second end of the struts is arranged rotatably moveable at the corresponding side wall. The opposing side walls and the first side wall may include recesses in order to receive or the bracket and the struts, wherein the recesses may be such that the struts and the bracket in the first or second position of the locking element are flush with one surface of the opposing side walls facing the first side wall or with an exterior surface of the one side wall. Further, a latching element may be provided which cooperates with the locking element in order to keep the locking element securely in the first or second position. For forming the latching element, the struts and/or the bracket of the locking element may be implemented to engage portions of the opposite side walls or the first side wall, wherein according to embodiments the struts and/or bracket in this respect comprise one or several snap-in elements in order to cooperate with corresponding snap-in element receiving portions of the side walls. The locking element may be arranged at the second position with a distance from the bottom or floor which corresponds to about a third, a half or two thirds of the height of the opposing side walls. Further, the locking element may be implemented to be additionally arranged at a further position spaced apart from the first side wall, wherein in this case the struts may be implemented telescopically, to arrange the locking element selectively at the second or at the further position.

According to a further aspect of the invention, the box further includes an insert to be arranged on the floor of the box, the insert being implemented depending on the products to be received in the box.

According to embodiments, the insert may be detachably connectable to the floor and/or the side surfaces, advantageously only using special tools. The insert may be plate-

shaped and a first surface of the insert facing the floor may be adapted to a structure of the floor. The surface of the plate-shaped insert opposing the first surface is structured according to the product to be inserted. The insert may include sleeves, longitudinal struts, cross struts or members and/or recesses. Embodiments further provide a system including a box according to embodiments of the invention and a plurality of inserts structured for different products, wherein one of the inserts may selectively be arranged in the box.

According to this aspect, thus a system is provided which may be assembled freely, which may easily be adapted to different products to be inserted into the box, for example by a service provider who provides the boxes according to a configuration desired by a customer, and provides corresponding inserts, and accordingly assembles the boxes without inserts, wherein it is in this case provided for the inserts only to be exchangeable using special tools, which only the box provider has possession of.

According to embodiments of the invention, the box is restricted in vertical direction to the top by the first side wall area (which may also be the complete side wall) extending from the bottom to the top, which has a lower retrieval height. I.e., above this first side wall area no further frictional connection between the adjacent side walls exists. In other words, the first side wall is at least partially less high than the surrounding side walls or than some of the surrounding side walls, so that access is possible also at the side of the box, in order to thus have easy access to products which are arranged in lower boxes of the stack, even if the boxes are stacked.

Here, in some embodiments, the height of the first side wall is still dimensioned such that the specific products transported in the box may not fall out of the box during transport. In some embodiments, the box is determined for the transport of bottles or of bottles prepacked in smaller containers, which is why the first side wall comprises a height which is sufficient to prevent falling out of individual bottles from the box. In some embodiments, the height is between 1 and 10 centimeters. In some further embodiments, this height is between 2 and 5 centimeters, or generally more than 2 centimeters.

In some embodiments, the first side wall each comprises two side wall portions at its edges adjacent to the neighboring side walls which extend up to the height of the adjacent side walls in order to increase stability of the box.

According to the invention, the box comprises four side walls, wherein at least in the side walls adjacent to the first side wall grip openings are arranged. The grip openings here comprise an area running parallel to the bottom and also an area running perpendicular to the bottom.

According to the invention, the area running perpendicular to the floor or bottom is arranged in the direction of the first side wall. In some embodiments, apart from that the first horizontal opening section running parallel to the bottom passes into the vertical opening section with a radius which is large enough to be able to grip the box in the radius. In this embodiments of the invention it is consequently possible to grip and lift the box also in the radius or in the vertical opening section so that the same tilts backwards when gripping. During transport this reduces the probability of goods falling out, like for example the bottles, from the box through the opening of the first side wall.

According to some embodiments of the invention the box further comprises, in the floor area adjacent to the first side wall, a larger supporting area for the products to be transported than on average in the remaining area of the floor. In other words this means that, when the floor is not implemented holohedrally but for example consists of individual struts, the number of struts per area, i.e. the strut density in the area adjacent to the first side wall is increased. This leads to the fact that a good inserted into the box near the side wall, for example a beverage bottle or can is in contact with the floor with a large area or supporting area. This prevents the bottle or the beverage can to slip or tilt into recesses between the floor struts, so that an unwanted falling out of the can or the bottle during transport is prevented.

In some embodiments, further the side walls adjacent to the first side wall at the front side where they abut on the first side wall are less high than at the front side opposing the side wall. I.e., in the direction of the opening, the side walls adjacent to the opening are lower, so that on the one hand the space available for retrieval is increased and so that on the other hand the light incidence or viewing angle into the interior of the box is increased in order to thus make the objects transported in the box, like for example bottles or the like better visible.

In some further embodiments, the remaining side walls which do not correspond to the first side wall are foldable or hinged with respect to the floor, so that the box may be brought into a folded state in which the remaining side walls are approximately parallel to

the floor overlying the same or are located above the floor. By this, the box may be transported more efficiently and at lower costs in the empty state.

Some embodiments comprise an additional movable side wall area which extends above the first side wall in a vertical direction and which may either be removed or folded away. This may have the advantage that in the upfolded state the moveable side wall area additionally increases the stability or security so that no goods or products may fall out of the box. Further, in this unfolded state or down-folded state the moveable side wall area may be used to present product information or the like.

In some embodiments, the moveable side wall area is implemented latticed or formed from a plurality of struts so that the box may be cleaned by pressure jets without separating the moveable side wall area from the box or inadvertently removing the same from the box by the high pressure.

In some embodiments, further the remaining side walls are coated or laminated with an foil or film which contains product information which may be read from the outside.

In some further embodiments, a light foil is provided so that by light reflection the object or bottles transported in the box may be optically better visible.

In some further embodiments the remaining three side walls which do not correspond to the lower wall are of equal height so that the boxes may be stacked onto each other, wherein the floor of a box comes to lie on the remaining three side walls of the underlying box. For this purpose, both in the floor and also in the top ends of the remaining side walls special recesses or contours may be provided into which the corresponding recesses or contours of the floor or the remaining side walls engage in order to thus enable stackability and guarantee secure standing.

In some embodiments of inventive boxes which are suitable for storing or transport and presentation of beverage bottles or cans the floor comprises a plurality of sleeves extending in the vertical direction from the floor upwards. Sleeves are three-dimensional objects which are located on the floor and which are shaped such that the bottles are held or fixed by the outer boundary surfaces of the sleeves, so that falling out of the bottles is effectively prevented. In some embodiments, the sleeves only comprise a low height in the vertical direction, so that the same may also be referred to as sleeve stumps. The

height and the exterior shape of some sleeves is selected so that the same prevents falling out of the bottles through the lateral opening in connection with the first side wall. In order to still guarantee a retrieval, in some embodiments, the sleeves at their highest position are not higher than the first side wall. In some embodiments, the outer boundary surfaces of the sleeves have a varying height to adapt the same best as possible to the respective requirements. In order to enable tilting or falling out of the bottles in the direction of the first side wall and still guarantee a good stability, the sleeves comprise a lower height in a direction in parallel to the side wall than in the direction towards the first side wall so that tilting in parallel to the first side wall is enabled, wherein tilting in a direction perpendicular to that is impeded and the bottles are held securely.

Embodiments of the present invention will be detailed subsequently referring to the appended drawings, in which:

Fig. 1 shows an embodiment of a box for transporting bottles;

Fig. 2 shows the embodiment of Fig. 1 loaded with "sixpacks";

Fig. 3 shows filled, stacked boxes according to the embodiment of Fig. 1;

Fig. 4 shows the embodiment of Fig. 1 viewed from the bottom;

Fig. 5 shows a further embodiment of an inventive box;

Fig. 6 shows a further embodiment of an inventive box with foldable side walls;

Fig. 7 shows the embodiment of Fig. 6 in a partially folded state;

Fig. 8 shows the embodiment of Fig. 6 in a completely folded state;

Fig. 9 shows the embodiment of Fig. 6 filled with bottles;

Fig. 10 shows the embodiment of Fig. 6 filled with "sixpacks";

Fig. 11 shows a top view onto the embodiment of Fig. 6;

Fig. 12 shows a detailed view of sleeves used in some embodiments of the invention;

Fig. 13(a) shows a box according to Fig. 1 with a locking element according to one embodiment of the present invention in a first, open position;

Fig. 13(b) shows the box of Fig. 13(a) with the locking element in the second, closed position;

Fig. 14 shows a stacked arrangement of a box of Fig. 1 and a box of Fig. 13;

Fig. 15 shows a box according to Fig. 1 with an exchangeable insert;

Fig. 16(a)-(d) show embodiments for inserts which may be used in the box according to Fig. 16.

Fig. 1 shows an inventive embodiment of a box 10 for beverages. The floor 12 in the illustrated embodiment is not implemented continuously holohedrally but consists of a lattice-type structure. As it may be seen from the bottom view of the box of Fig. 3, the floor 12 is formed by a plurality of bars or struts. The same are arranged densely enough so that the goods to be transported, i.e. for example a bottle, may not fall through the floor of the box or tilt in an uncontrolled way when an edge of a bottle tilts into one of the recesses between the struts.

The box further comprises two pairs of respectively opposing side walls 14a, 14b and 16a, 16b which extend from the floor 12 upwards, i.e. in the vertical direction 18. A first one of four side walls, in this example side wall 16b, only extends by a small retrieval height 20 into the vertical direction 18.

The retrieval height 20 is lower than the height of the remaining side walls 14a, 14b and 16a, so that a lateral opening is formed which enables an access to or a retrieval or removal of bottles or products contained and transported in the box through the lateral opening. Above the first side wall 16b no further structure of the box is located. On the floor 12 of the embodiment illustrated in Fig. 1 further a plurality of sleeves are arranged of which for example sleeve (or barrel or quill) 22a and sleeve 22b are emphasized. The lateral opening for removing the products is thus generated by the first side wall 16b

having a lower height than the adjacent or the remaining side walls. Here and also in the following figures, the height is to be the dimension in the positive vertical direction 18. The term "top" designates a position in the positive vertical direction 18, the term "bottom" designates a position comprising a smaller coordinate in the vertical direction 18. The sides are any direction which limit the box in the directions in parallel to the surface of the bottom or floor 12.

By the first side wall 16a a lateral opening is defined or formed which enables access for removing the bottles transported in the box. In other embodiments, of course other products may be transported in the box. In the box of Fig. 1 also so-called "sixpacks" may be transported, i.e. prepacked containers of six bottles each.

In alternative embodiments not illustrated here, the side wall does not comprise the lower retrieval height 20 along its complete length but from the adjacent side walls 14a and 14b fixed side wall sections extend into the lateral opening, wherein the lateral opening still remains so large that a removal of the products or bottles is guaranteed. Such boxes may have an increased stability.

The embodiment of a box 10 illustrated in Fig. 1 further comprises a moveable side wall are 23 which is hinged with respect to a fixed first side wall 16b via hinges 24a to 24c. The moveable side wall area 23 is illustrated in Fig. 1 in a downfolded position, in which the same is folded down with respect to the first side wall 16b. In the upfolded position which is illustrated in the following with respect to some other embodiments of the invention, the moveable side wall area 23 extends in the vertical direction 18 upwards. By this, security may additionally be increased in so far as a bottle located in the box 10 may not tilt outwards. Additionally, the moveable part may be used to present product information or the like.

The side walls 14a and 14b adjacent to the first side wall 16b each comprise a grip opening 28a and 28b using which the box may be lifted and carried. Here, the grip openings comprise both a first opening area extending in parallel to the floor and also a second opening area basically extending in a vertical direction whose function will be explained in more detail in the following with reference to Fig. 3.

Further, the side walls 14a and 14b adjacent to the first side wall 16b, at the end facing into the direction of the first side wall, comprise bevelled edge areas 30a and 30b through

which light may fall into the boxes even if they are stacked one onto the other. In the embodiment illustrated in Fig. 1, thus the ends of the side walls 14a and 14b adjacent to the first side wall 16b comprise a lower height than at their opposing end. It is obvious that although in the embodiment illustrated in Fig. 1 the recessed part of the side wall is basically triangular, any other shapes of the recesses may also be used for alternative embodiments. In some embodiments, the heights of the side walls 14a and 14b adjacent to the first side wall 16b continuously increase up to the maximum height. In alternative embodiments, the height increase may of course also be in a stepped or in a staircase manner.

The box illustrated in Fig. 1 may be stacked, i.e. the contours of the upper ends of the side walls 14a, 14b and 16a are implemented such that when stacking the same engage the contour or the structure of the floor of another box (see for example Fig. 3), so that the boxes may be stacked one above the other. In spite of that, the lateral opening defined by the first side wall 16b enables to remove bottles or bottle containers like sixpacks from the interior of the box, even if the same is stacked.

In some embodiments of the invention, the surfaces of the side walls 14a, 14b and 16a facing inwards are designed with a light color so that by the light incidence caused by the openings 30a and 30b the bottles in the interior of the boxes are well visible for the observer from the outside. In alternative embodiments, the surfaces are pasted with product information or advertisements.

The embodiment of the invention illustrated in Fig. 1 further comprises, at at least one of the side walls (in the case illustrated here the side wall 14b), a plurality of bars or lands 32a to 32d passing in the vertical direction and protruding inwards from one of the side surfaces, which prevent the bottles held in the interior of the box by the sleeves to contact the side wall with their complete side surface and pollute the same extensively. In the embodiment illustrated in Fig. 1 the bars 32a to 32d are each arranged such that the bottles lie against the exterior wall with their outermost radius at the position of the bars 32a to 32d. It may thus be prevented that large areas of the interior surfaces of the side walls are polluted as this applies only to the bars.

Fig. 2 shows the embodiment of the box 10 of Fig. 1 in a state filled with three sixpacks.

The sixpacks 40a, 40b and 40c each contain six individual bottles not illustrated here for reasons of clarity.

Here, in addition to the sleeves which engage into the sixpacks from the bottom which are opened at the bottom for this purpose, the sixpacks are held by the bars 40a and 40b which, as illustrated in Fig. 1, are arranged at the floor 12 of the box 10.

As it may be gathered from the view of Fig. 3 which shows two boxes 10 and 10a in a state stacked upon each other, the products or bottles may be removed from the bottom box 10 also in the stacked state. This obviously also applies to the sixpacks 40a, 40b and 40c when the same are transported or presented in the boxes as an alternative to individual bottles. As it may be seen in Fig. 2 and 3 the special implementation of a box illustrated in Fig. 1 comprises a high flexibility with respect to the bottles to be transported, as on the one hand sixpacks and on the other hand individual bottles may be transported using the box. This results from the arrangement of the sleeves 22a and 22b and the bars 42a and 42b illustrated in the arrangement of Fig. 1.

It is obvious that in other embodiments of the box 10 the arrangement of the sleeves may be different. For example, in some embodiments bars may be completely omitted and instead only sleeves may be used. In the embodiment illustrated in Fig. 1, however, both is possible as each individual bottle which is inserted in one of the free spaces between the sleeves and/or bars, is supported in four directions each either by a side wall of a bar, by a sleeve or by one of the side walls 14a, 14b, 16a or 16b of the box so that the same is stably supported for transport.

As it may be seen in Fig. 3, due to the possibility of stacking the boxes and the possibility of a lateral retrieval, which is provided by the first side wall 16b, it is now possible to offer different products for sale in a column of stacked boxes. The side wall 16b here prevents in connection with the sleeves that the bottles may fall out of the box 10 during transport, which is why the side wall 16b is dimensioned so that during transport it prevents tilting or falling out of the box. It still is low enough, however, so that the bottles may be removed from the box towards the front, although a further box 10a is arranged on the box 10. In this respect, according to some embodiments, the bottles may first of all be slightly lifted and then be tilted and taken out towards the front. This is in some embodiments enabled by a special implementation of the sleeves, as it is described in more detail with reference to Fig. 12.

Fig. 3 clearly shows a further characteristic of the present invention, that is the special implementation of the grip openings 28a and 28b. The grip opening is bent and extends both horizontally and also vertically. In other words, the grip opening 28a comprises a first opening area 50a extending in parallel to the floor 12 and a second opening area 50b passing basically in the vertical direction 18. Here, the delimitation between vertical and horizontal opening area in Fig. 3 is to be regarded only as an example. The grip opening 28a also extends to a significant extent in the vertical direction, so that the grip opening 28a may be used by a person also in the vertical opening area. With alternative embodiments of the invention the grip opening 28a may of course be of another shape than in the embodiment illustrated in Fig. 3, so that the box may be lifted both from the top by means of the horizontal opening area 50a and also from the side by means of the vertical opening area 50b.

According to the invention, the vertical opening area is located on the side facing the first side wall 16b and passes with a large radius into the horizontal opening area 50a at the outer contour (i.e. the contour directing into the direction of the first side wall). This leads to the fact that when lifting the box the same may be gripped in that radius, so that the box, when the vertical opening area is located at the side associated with the first side wall 16b, tilts backwards (in the direction of the side wall 16a), so that by the inclination of the box during carrying, falling out of the individual bottles is additionally prevented.

In some embodiments of the invention, as illustrated with respect to Fig. 4 showing a respective view from the bottom towards the box of Fig. 1 and with respect to Fig. 11 showing a bottom view of a further embodiment of the invention, security is additionally increased by a special implementation of the floor 12 in the area 50 adjacent to the first side wall 16b.

In some embodiments of the invention, the floor 12 is not implemented holohedrally but is formed by an arrangement of ribs for saving weight and for easier cleaning. The same cover the surface of the floor 12 so that the individual bottles are supported securely on the floor 12 by their bottle bottom. In the area 50 of the front edge, i.e. in the area 50 adjacent to the first side wall 16b, the number or the area density of the ribs, compared to the residual area, is increased so that the bottles located there may not tilt outwards even when they are tilted from their rest position slightly into the direction of the first side wall 16b by exterior influences. This is prevented by the ribs being set so densely in the area 50 adjacent to the first side wall 16b, that the edge of a bottle may not tilt in between the

spacing between two adjacent ribs. In other words, in the area 50 adjacent to the first side wall 16b the floor 12 comprises a supporting area for the bottles which is larger than the available supporting area provided on average across the floor per area unit, to enable secure holding of the bottles.

As it may further be gathered from Fig. 4, at the area adjacent to the side walls 14a, 14b and 16a the floor 12 comprises an elevation of several ribs whose contour is implemented so that when put onto another box it engages in the interior of the side wall into the contour of the side walls of the further box in order to guarantee the stackability and a secure standing in the stacked state.

Further, the floor of the box in the center of the same comprises a strut 52 extending from the side wall 16a to the first side wall 16b and whose bars comprise a larger extent in the vertical direction than the remaining bars of the floor. This strut 52 serves to additionally support the first side wall 16b of a reduced height in order increase the stability of the box. The strut 52 is arranged at the center so that the strut which extends downwards further than the remaining floor does not obstruct lifting out the bottles from the bottom box in the stacked state.

Fig. 5 shows a further embodiment of the present invention which basically is different from the embodiments discussed with reference to the above figures as using the embodiment illustrated in Fig. 5 different bottle sizes may be transported. While the embodiment illustrated in Fig. 1 is adapted to bottles having a content of 0.5 l, the embodiment illustrated in Fig. 5 of a box is adapted to bottles with a content of 0.33l. Thus, the embodiment of Fig. 5 is basically different from the embodiment of Fig. 1 with respect to the arrangement of the sleeves and with respect to the strength of side walls 14a, 14b and 16a which was changed to hold the bottles arranged in the interior of the box while the outer volume is maintained. Thus, for example, the box illustrated in Fig. 5 comprises five sleeves 54a, 54b, 54c, 54d and 54e which are adjacent to the first side wall 16b in order to all in all hold six bottles of a content of 0.33 l in the first row. Further, the box of Fig. 5 only comprises one continuous bar 56 in the center of the box so that alternatively four sixpacks may be transported using the box.

Further, the embodiment of Fig. 5, in contrast to the embodiments of Fig. 1 to 4, shows the box with an upfolded moveable side wall area 23 at the first side wall 16b. As apart from that the implementation features of the box of Fig. 5 correspond to those of Fig. 1

and each have an identical functionality, a renewed discussion of the components corresponding to those of the box Fig. 1 is omitted. It is to be additionally noted here that the box illustrated in Fig. 5, just like the box illustrated in Fig. 1, comprises at least one opening 58 at the side wall 16a which is opposite to the first side wall 16b, wherein the opening extends through the side wall 16a so that the box may be mounted or hung to a wall or a shelf or the like by means of the opening.

For increasing security of mounting the embodiments illustrated in Fig. 1 and 5 each additionally comprise an optional second mounting opening 60.

The embodiment illustrated in Fig. 6 is also configured for the transport of 24 pieces of bottles with a content of 0.33 l each and here basically corresponds to the embodiment illustrated in Fig. 5. In the embodiment of Fig. 5, however, the side walls 14a, 14b and 16a or at least parts of the side walls 14a, 14b and 16a are arranged foldable with respect to the floor by means of hinges. Here they are foldable such that they may be folded into the direction of the floor and in a folded state are located basically in parallel to the floor, at it is illustrated in Fig. 7 for the side wall 16a which is in parallel to the surface of the floor 12 in a folded state. Fig. 8 shows all side walls 14a, 14b, and 16a in a folded down state, so that in the folded state the box may easily be transported back to the brewery or a filler without needing much storage space. This may substantially reduce transport costs.

Although with respect to Figs 6 to 8 the foldable side walls 14a, 14b and 16a are only illustrated for one box, which is configured to transport 24 bottles á 0.33 l, it is obvious that also the box illustrated in Fig. 1 for 0.5 l bottles may be equipped with foldable side walls. It generally applies to any embodiment disclosed here that the features described or illustrated with respect to the individual embodiments may be randomly combined with each other in order to acquire alternative further embodiments of inventive boxes.

Fig. 9 illustrates the embodiment Fig. 5 in a loaded state in which 24 bottles are located in the box.

Just like in Fig. 5 also here the moveable side wall area 23 is in the upfolded position in order to thus additionally secure the bottles of the frontmost row or to apply product identifications for transport on the outside of the flexible part 23 which are not relevant for the presentation of the goods.

Fig. 10 shows the embodiment of Fig. 5 with an alternative form of load, that is four sixpacks 70a, 70b, 70c and 70d.

Fig. 11 finally shows a top view onto the embodiment of Fig. 5, wherein it is obvious that the sleeve 54c comprises a different geometrical form than the sleeves 54a, 54b, and 54d or 54e in order to enable placing sixpacks inside. With alternative embodiments, however, the central sleeve 54c may of course have the same design or form as the remaining sleeves, i.e. for example sleeve 54a. Likewise, any other sleeves may have the form of sleeve 54c.

As it may be seen from the top view of Fig. 11, also for the case of boxes for 24 beverage bottles, the floor 12 in the area 50 adjacent to the first side wall 16 is constructed with a larger supporting area than the central supporting area of the complete floor in order to prevent an unwanted falling out of the bottles from the box.

Fig. 12 shows an enlarged illustration of the sleeves 54a to 54c, so that their special shape may be seen which enables, in cooperation with the first side wall 16b, to hold the bottles both securely and also retrievable towards the front. In order to achieve this some embodiments of sleeves have an outer surface whose height is not constant in the vertical direction. As an outer boundary surface of the sleeve 54a, in the following, the hatched area 70 is to be regarded, i.e. the area or the area elements which limit the sleeves laterally, i.e. in any direction orthogonal to the vertical direction 18.

The outer boundary surface or area 70 comprises a varying height, as already indicated above. Here, the sleeve in a first side surface area 75 which is parallel to the first side wall 16b and secures a bottle to the back (in the direction 72 facing away from the first side wall 16b) is less high than in a second side surface area 76 which secures the bottle against a tilting in a direction 74 in parallel to the first side wall 16b.

With the sleeve 54a illustrated in Fig. 12 which comprises a basically diamond-shaped cross-section whose tip is directed into the direction of the first side wall 16b, the function of preventing tilting backwards is executed by a first boundary surface area 75 which completes the sleeve basically in the direction in parallel to the first side wall 16b. A second boundary surface area 76 limiting the sleeve 54b in the direction of the first side wall 16b prevents tilting of the bottles in parallel to the first side wall 16b.

The first side surface area 75 is lower than the second side surface area 76 to enable tilting when the bottles fall or tilt out to the front, without having to lift the bottle so far that it possibly already abuts on the floor of a further box which is stacked on the respective box.

The second boundary surface area 76, however, prevents tilting in the direction in parallel to the first side wall 16b and may thus be higher in order to increase stability. Generally, both the sleeves 54a and 54b as also the sleeve 54c cause a maximum stability when simultaneously enabling tilting out towards the front as the sleeves in the direction in parallel to the side wall comprise a lower height than in the direction perpendicular to the side wall.

Further, the sleeves in Fig. 12 are provided with outer boundary partial surfaces, which are concavely domed in between the tips of the basically diamond-shaped basic form, wherein the radius of the dome basically corresponds to the diameter of a bottle in order to still be able to securely hold the bottle.

With reference to figures 13 and 14, in the following a further aspect is described according to which a box, as it was explained for example with reference to Fig. 1 to 12, is provided with a further element, a locking element, which for example serves as a transport protection. Fig. 13 shows a box which basically corresponds to the box of Fig. 1, so that a renewed description of the different elements already described with respect to Fig. 1 is omitted. As it may be seen, the box according to Fig. 13(a) further includes a locking element 100 comprising a bracket 102 which includes two opposing ends. At a first end 102a of the bracket 102 a first strut 104 is arranged and at a second end 102b of the bracket 102 a second strut 106 is arranged. The ends 104a and 106a of the struts 104, 106 facing away from the bracket 102 are arranged rotationally moveable at the opposing side surfaces or end surfaces 14a and 14b. In the situation illustrated in Fig. 13(a), the locking element or transport protection element 100 is located in a position which is between a first position and a second position. With reference to Fig. 13(b) the box illustrated in Fig. 13(a) is again illustrated, but now with the locking element 100 in a first position in which the bracket 102 extends between the side walls 14a and 14b, wherein the same is arranged spaced apart from the lower side wall 16b. In the embodiment illustrated in Fig. 13(b) the bracket 102 is located half way up the side walls 14a and 14b, wherein the present invention is not restricted to this arrangement. Rather, the bracket 102 may either be arranged lower or higher, depending on the circumstances. The struts 104 and 106 are implemented such and supported such that when folding or

turning the bracket 102 from the position illustrated in Fig. 13(a) into the position illustrated in Fig. 13(b), the bracket 102 takes on a certain distance to the bottom, lower side wall 116b. As it may be gathered from Fig. 13(b), the side walls 14a and 14b or the surfaces of these two end walls facing the lower side wall 16b are structured to receive or include the struts 104 and 106 and the area in which the bracket 102 is connected to the struts 104 and 106, i.e. the opposing ends 102a and 102b of the bracket 102, in recesses or cut-outs such that a flush front surface results.

Fig. 14 shows a stacked arrangement of a box of Fig. 1 on which a box according to Fig. 13 is arranged, wherein here, however, the situation is illustrated in which the bracket 102 is arranged in a second position in which the same is arranged overlapping the lower side wall 14b. As it may be seen, the lower side wall 16b is also structured by recesses or cut-outs to receive the bracket 102 in the second position illustrated in Fig. 14 so that a flush front surface of the side wall 16b results.

As it may further be gathered from Figs 13(b) and 14, the opposing ends 102a and 102b of the bracket 102 are implemented such that the same enclose the corresponding side wall 14a and 14b in the first position illustrated in Fig. 13(b) in order thus guarantee a latching and a secure positioning of the bracket 102. In a similar way, in the position illustrated in Fig. 14, a secure positioning of the bracket 102 is achieved by corresponding engagement elements formed in the low wall engaging the bracket 102.

It is the advantage of this aspect of the invention that now an additional transport protection element is provided which is arranged in the position illustrated in Fig. 13(b) during transport and thus may act upon products located within the box to prevent a movement of the same in the direction of the opening, in other words, to provide a further barrier against falling out of the products. The bracket is rotatably connected to the side surfaces or end surfaces of the box and may easily be moved from the closed position illustrated in Fig. 13(b) into the open position so that free access onto the products located within the box is possible.

The invention is not restricted to the examples described with reference to Fig. 13 and 14, and rather, instead of the arrangement of the bracket 102 half way up the end walls, also another positioning may be selected, for example the distance from the low wall 16b may be selected at one third of the height of the side walls or at two thirds of the height of the side walls. Further, according to one embodiment it may be provided to implement the

struts 104 and 106 telescopically in order to thus arrange a positioning of the bracket 102 based on the situation of Fig. 14 at different heights along the height of the side walls so that the height of the locking element 102 may be set flexibly depending on the products located within the box.

With respect to Figs 15 and 16 in the following a further aspect of the invention is described, wherein Fig. 15 shows a box which was already described with respect to Fig. 1 but which is different with respect to the implementation of the floor 12. In the box illustrated in Fig. 15 an insert 112 is provided which is detachably mounted to the floor of the box. The insert 112 illustrated in Fig. 16 includes a top surface 112a on which a first strut 114 is illustrated which extends in parallel to the opposing end walls 14a and 14b across the complete depth of the box up to the back wall 16a. A further strut, the cross strut or cross brace 116 is provided which extends from the side wall 14a about half way of the depth of the box up to the first strut 114. The insert 112 may for example be provided to receive products packed in cardboard boxes having dimensions corresponding to the compartments resulting in the insert 112. Apart from such products any products may be provided to be included in the box according to Fig. 16, wherein according to the invention for different products also different inserts 112 may be detachably arranged in the box.

With respect to Fig. 16 some embodiments for the implementation of the inserts 112 are given, wherein for example the surface 112a in Fig. 16(a) may be provided with rectangular and circular recesses to simultaneously take up products comprising a corresponding foot print. Fig. 16(b) shows, similar to Fig. 15, the arrangement of struts on the top surface 112a of the insert 112, and according to Fig. 16(c) sleeves may be provided on the top surface 112a similar to what was described with reference to Figs 1 to 12. Fig. 16(d) shows a lower surface 112b of the insert 112, wherein elements 118a to 118d arranged at the corners are illustrated which serve to engage corresponding elements or recesses in the floor 12 of the box, wherein the elements 118 are advantageously implemented so that for example after latching with the box floor a detachment from the box floor is only possible using special tools so that a box provider may assemble the boxes in a different way according to the requirements of the customer without the customer who uses the box having a possibility to exchange the insert for using the same with other products. This way, the boxes may be assembled according to the requirements of the customers and in particular increased demand for boxes with

certain inserts may be reacted on when boxes for other products are currently not as much in demand.

Although embodiments were discussed above basically in the context of beverage boxes, further embodiments of the present invention may of course also be used for other product types. For example, beverage cans and any other cylindrical objects like, for example, hair spray, deodorants cans or the like may be transported using the inventive boxes. Further, the boxes with a lateral opening may also be used for a completely different type of products which may deviate from a cylindrical base shape. The boxes are universally usable for any products as they enable to laterally take out the product from the box in the stacked state. This great advantage is not restricted to the type of transported goods.

PATENTKRAV

1. Kasse (10), med

en bund (12); og mindst to par respektive indbyrdes modsatliggende sidevægge (14a, 14b, 16a, 16b), hvor en første af sidevæggene (16b) strækker sig opad fra bunden (12) i en vertikal retning (18) i det mindste delvis kun med en udtagningshøjde (20), der er mindre end højden af en eller flere af de øvrige sidevægge (14a, 14b, 16a), for at definere en lateral åbning med en dimension, der muliggør adgang til og udtagning af i kassen indeholdte produkter gennem den laterale åbning; **kendetegnet ved** en indsats (112) til placering på bunden (12), hvor indsatsen (112) er udformet afhængigt af de produkter, der skal optages i kassen, hvor sidevæggene (14a, 14b), der støder op til den første sidevæg (16b), hver især udviser en grebsåbning (28a, 28b) til at løfte kassen, hvor en grebsåbning (28a, 28b) i hvert enkelt tilfælde udviser et første åbningsområde (50a), der strækker sig parallelt med bunden, og et andet åbningsområde (50b), der befinder sig på den mod den første sidevæg (16b) vendte side af grebsåbningen (28a, 28b) og forløber i det væsentlige i vertikal retning.

2. Kasse ifølge krav 1, hvor indsatsen (112) kan forbindes aftageligt med bunden (12) og/eller sidevæggene.

3. Kasse ifølge krav 1 eller 2, hvor indsatsen (112) er pladeformet, hvor en første mod bunden (12) vendt overflade (112b) af den pladeformede indsats (112) er tilpasset til en struktur i bunden (12), og den modsat den første overflade (112b) liggende anden overflade (112a) af den pladeformede indsats (112) er struktureret svarende til det produkt, der skal optages.

4. Kasse ifølge et af kravene 1 til 3, hvor indsatsen (112) omfatter pinoler, længdeafstivere, tværafstivere og/eller fordybninger med forudbestemt geometri.

5. Kasse ifølge et af kravene 1 til 4, hvor indsatsen (112) kun kan aftages fra bunden og/eller sidevæggene ved anvendelse af specialværktøj.

6. Kasse ifølge et af kravene 1 til 5, hvor åbningsområderne (50a, 50b) ved den bort fra bunden (12) vendte side i et overgangsområde går over i hinanden med en krumning, der gør det muligt at gribe kassen også i overgangsområdet.

7. Kasse ifølge krav 6, hvor krumningsradiussen er større end 2 cm.

8. Kasse ifølge et af de foregående krav, hvor indsatsen udviser en flerhed af pinoler (22a, 22b), der er udformet på en sådan måde, at de kan holde i kassen placerede flasker.

9. Kasse ifølge krav 8, hvor pinolernes (22a, 22b) højde i den vertikale retning (18) ikke overstiger udtagningshøjden (20) af den første sidevæg (16b).

10. Kasse ifølge et af kravene 8 eller 9, hvor pinolerne (22a, 22b) udviser en ydre afgrænsningsflade, der strækker sig opad i vertikal retning (18), og hvis højde varierer langs pinolens ydre omfang.

11. Kasse ifølge krav 10, hvor den mindst ene pinol (22a) udviser et afgrænsningsfladeområde (75), der afgrænser pinolen (22a) i en retning parallelt med den første sidevæg (16b), og som har en lavere højde end et andet afgrænsningsfladeområde (76), der afgrænser pinolen (22a) i retning af den første sidevæg (16b).

12. Kasse ifølge et af kravene 8 til 11, hvor pinolens (22a) afgrænsningsflade parallelt med bunden har et i det væsentlige rombeformet tværsnit, hvor en af rombens spidser peger i retning af den første sidevæg (16b).

13. Kasse ifølge krav 12, hvor pinolens (22a) ydre afgrænsningsflade er buet konkavt indad mellem spidserne af det rombeformede tværsnit.

14. Kasse ifølge krav 13, hvor buernes radius svarer omtrent til radiussen af et flaskelegeme, der skal holdes i kassen.

15. System, med:

en kasse ifølge et af kravene 1 til 14; og

en flerhed af indsatser (112), der er struktureret til forskellige produkter, hvor en af indsatserne (112) valgfrit kan placeres i kassen.

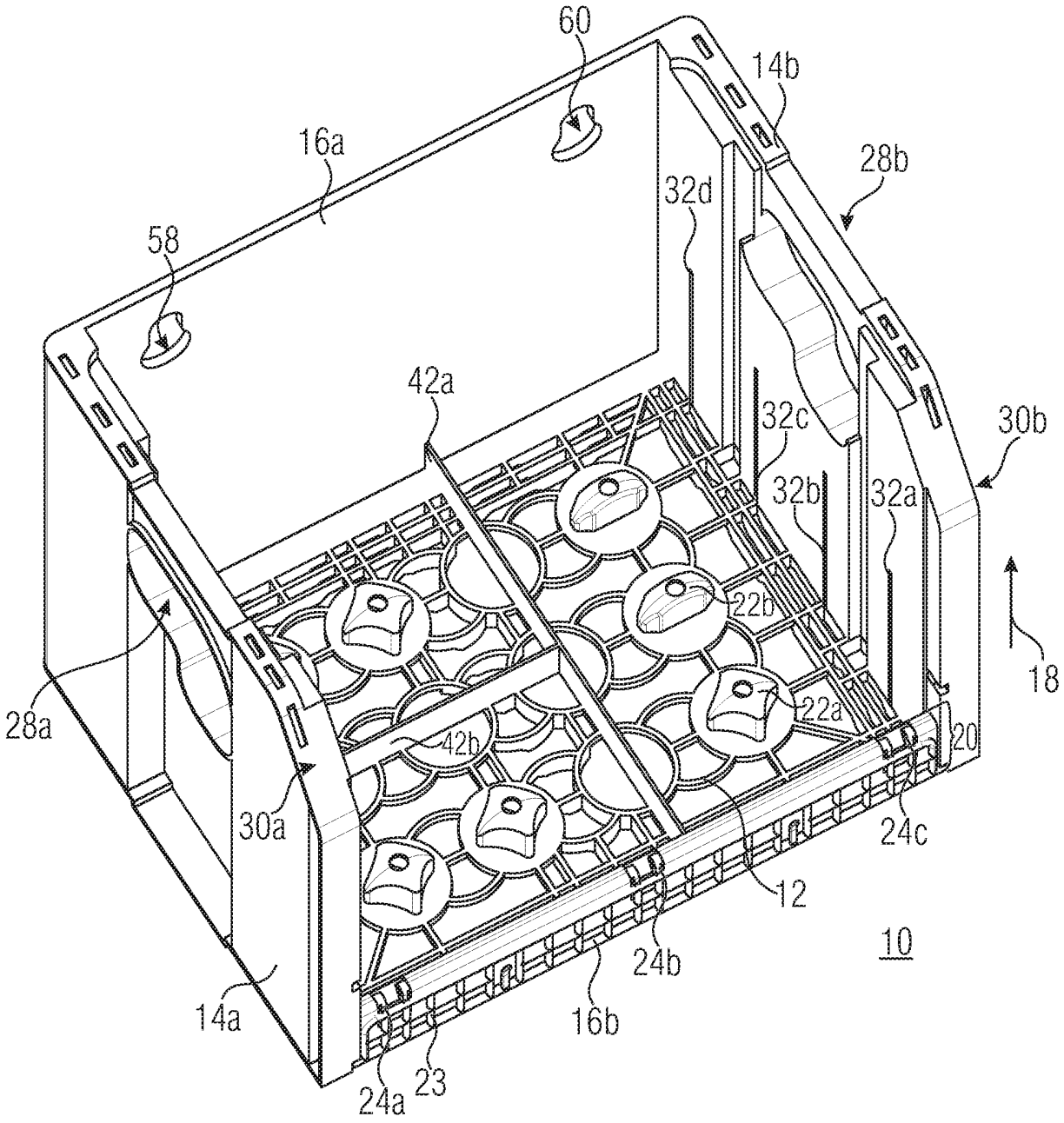
60
14b
16a
28b
32d
58
42a
32c
30b
32b
32a
22b
18
28a
22a
42b
20
30a
24c
12
10
24b
14a
16b
24a
23

Fig. 1

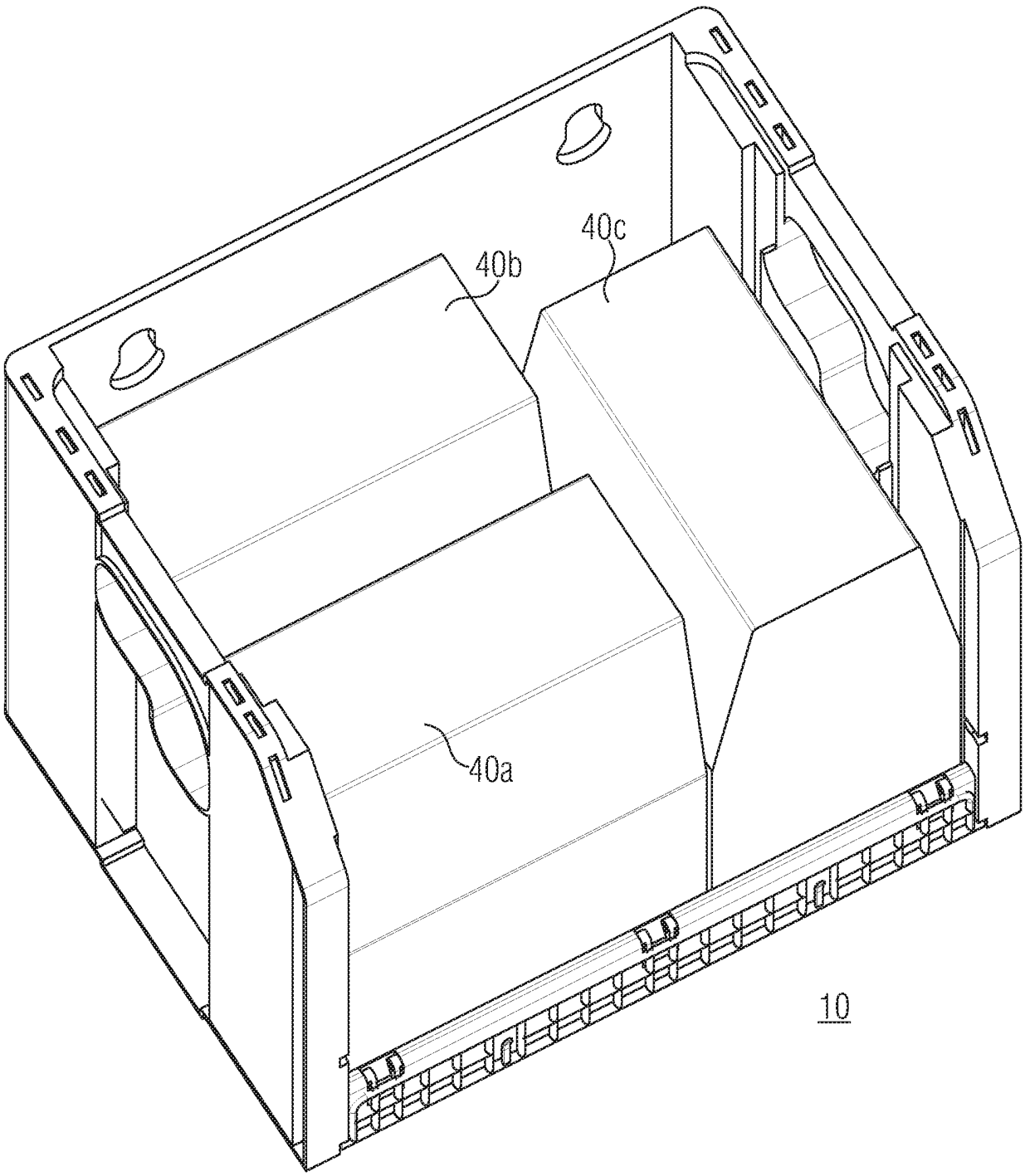

Fig. 2

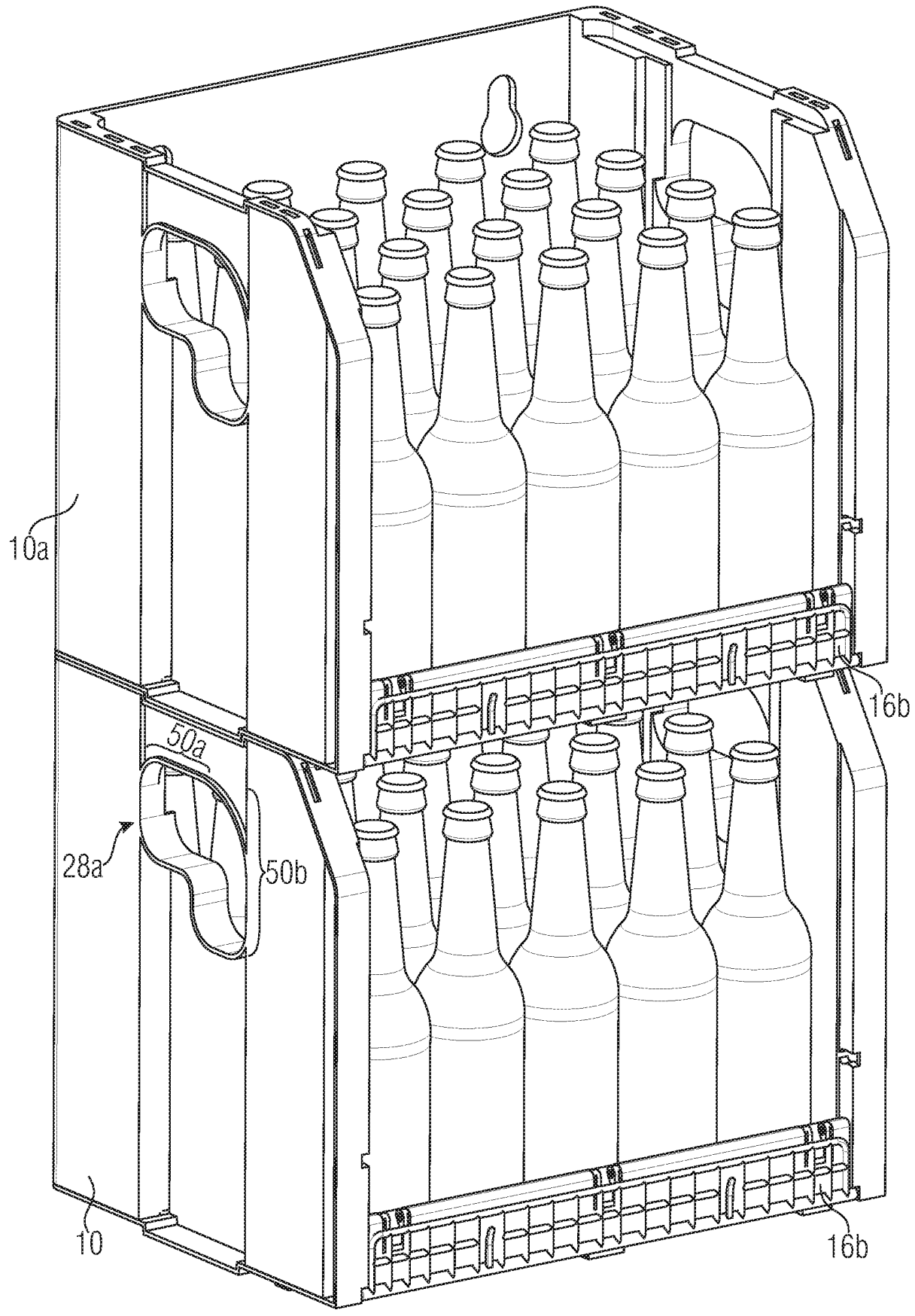

Fig. 3

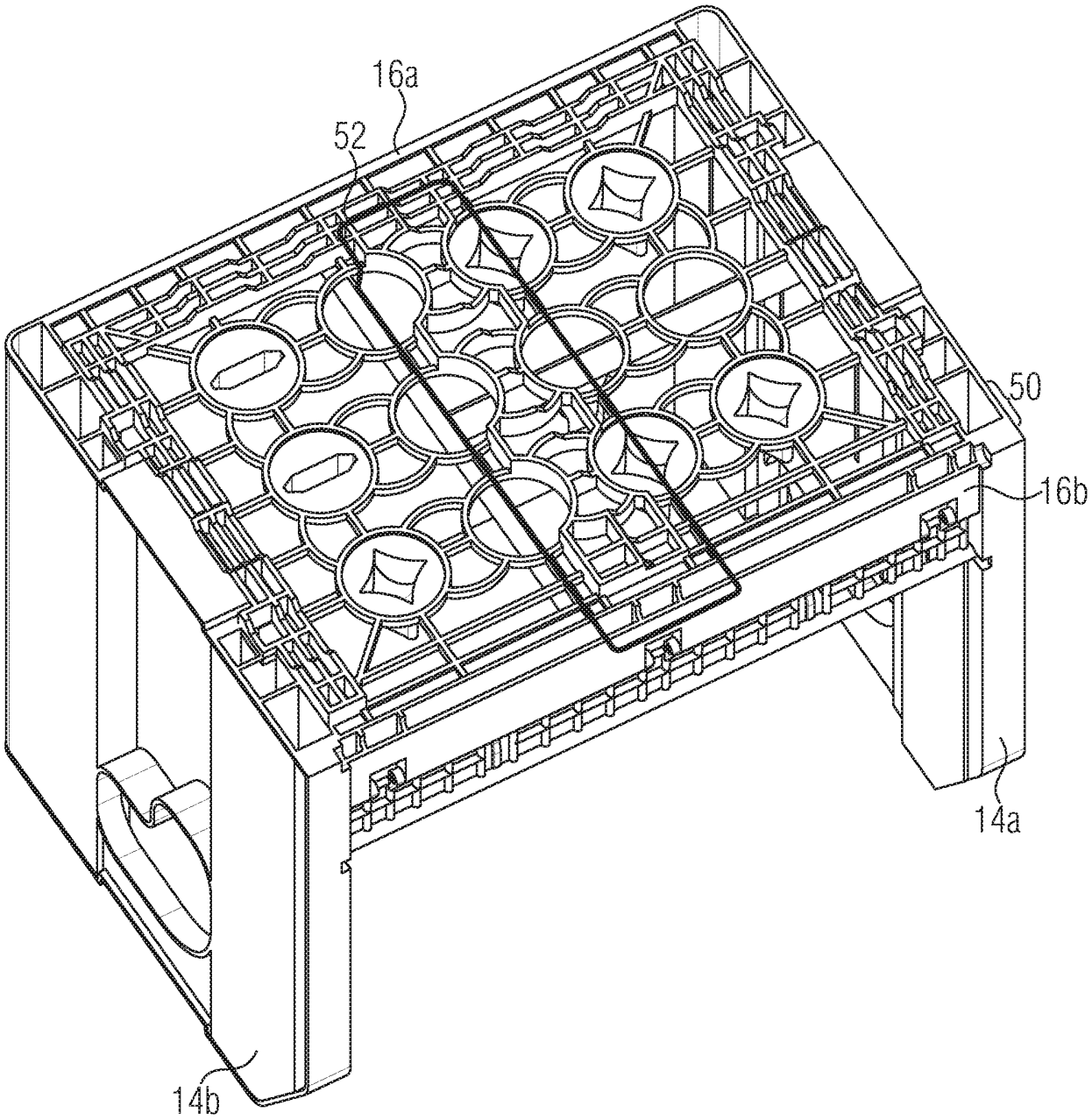

Fig. 4

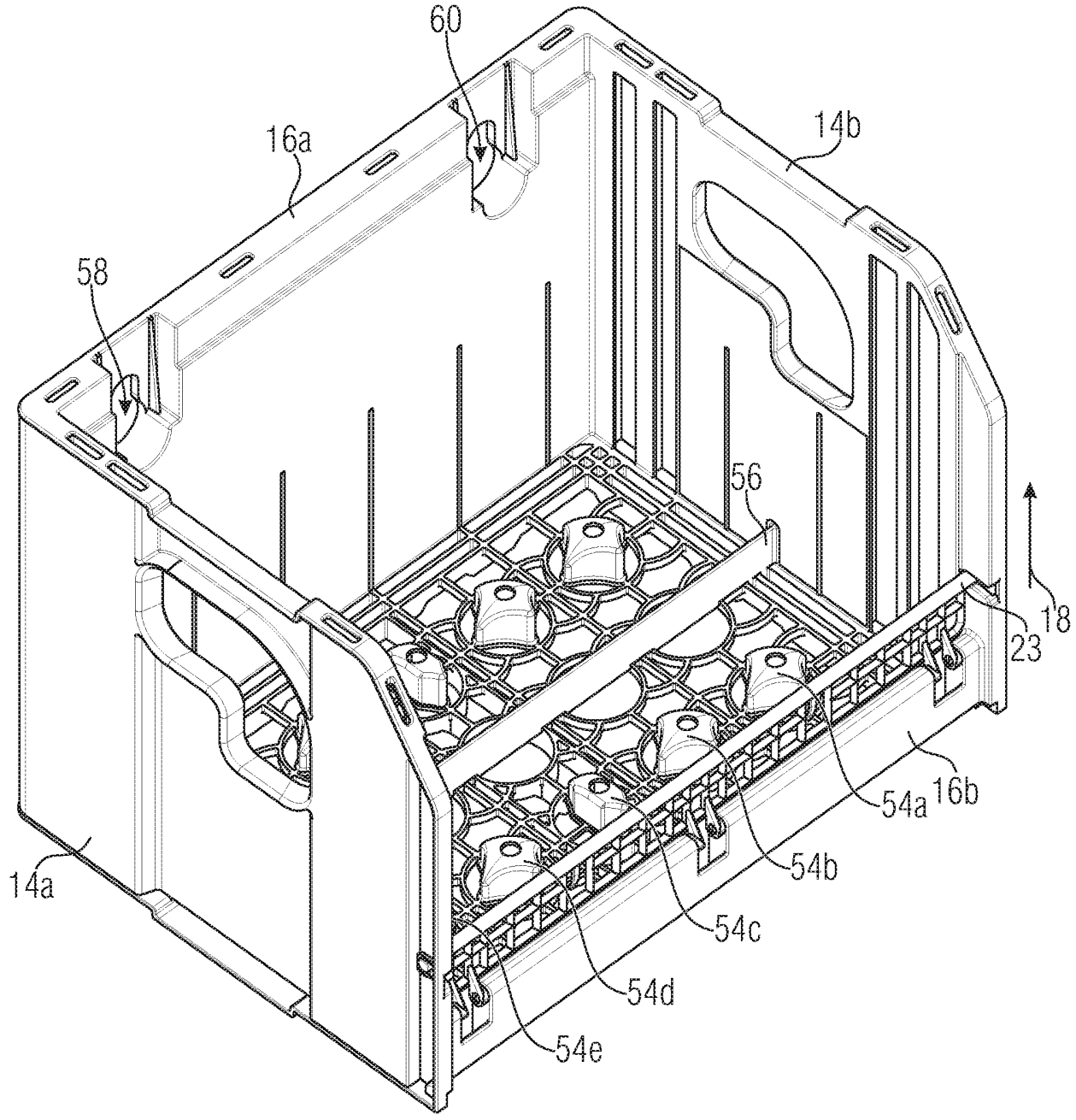

Fig. 5

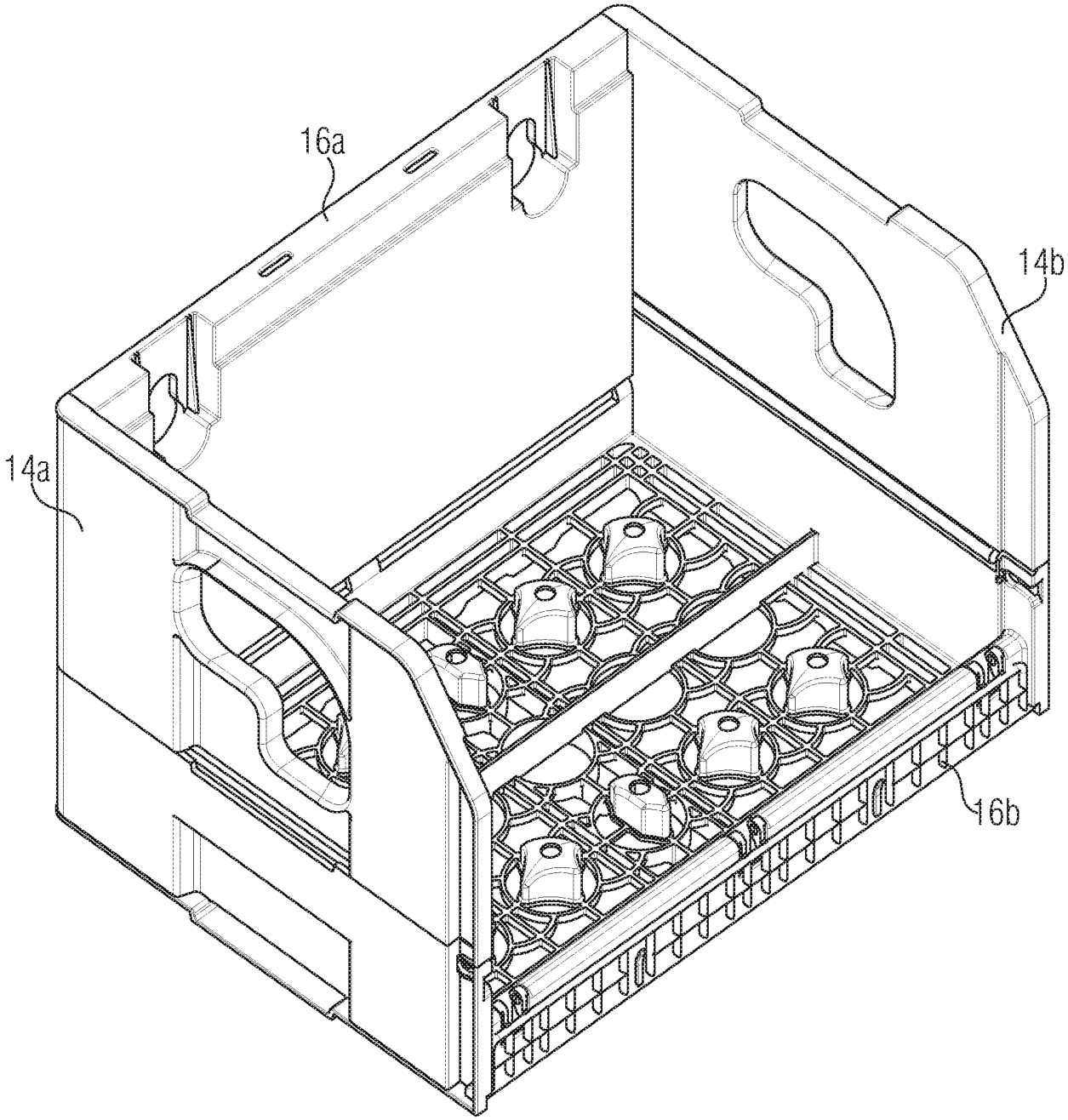

Fig. 6

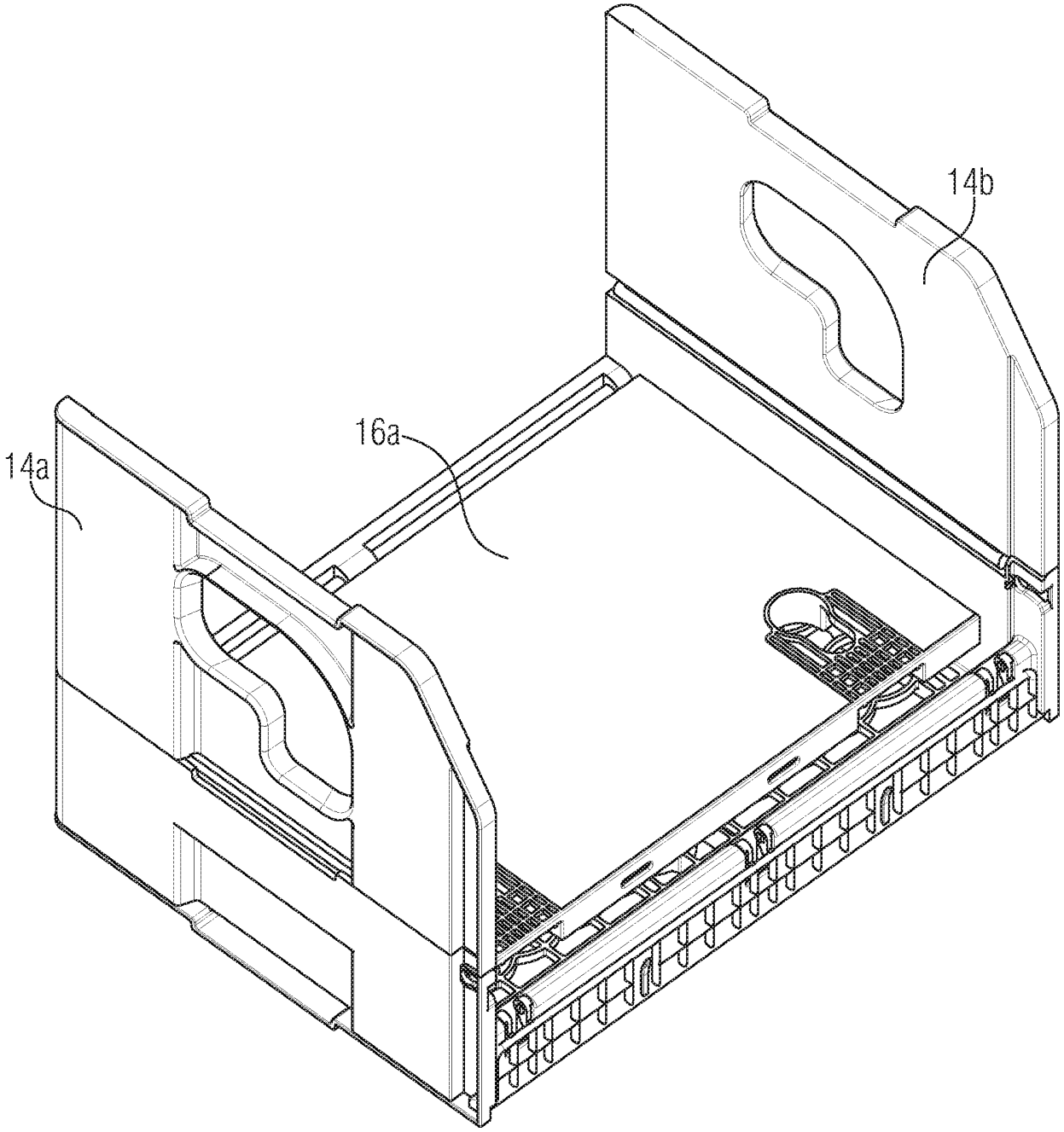

Fig. 7

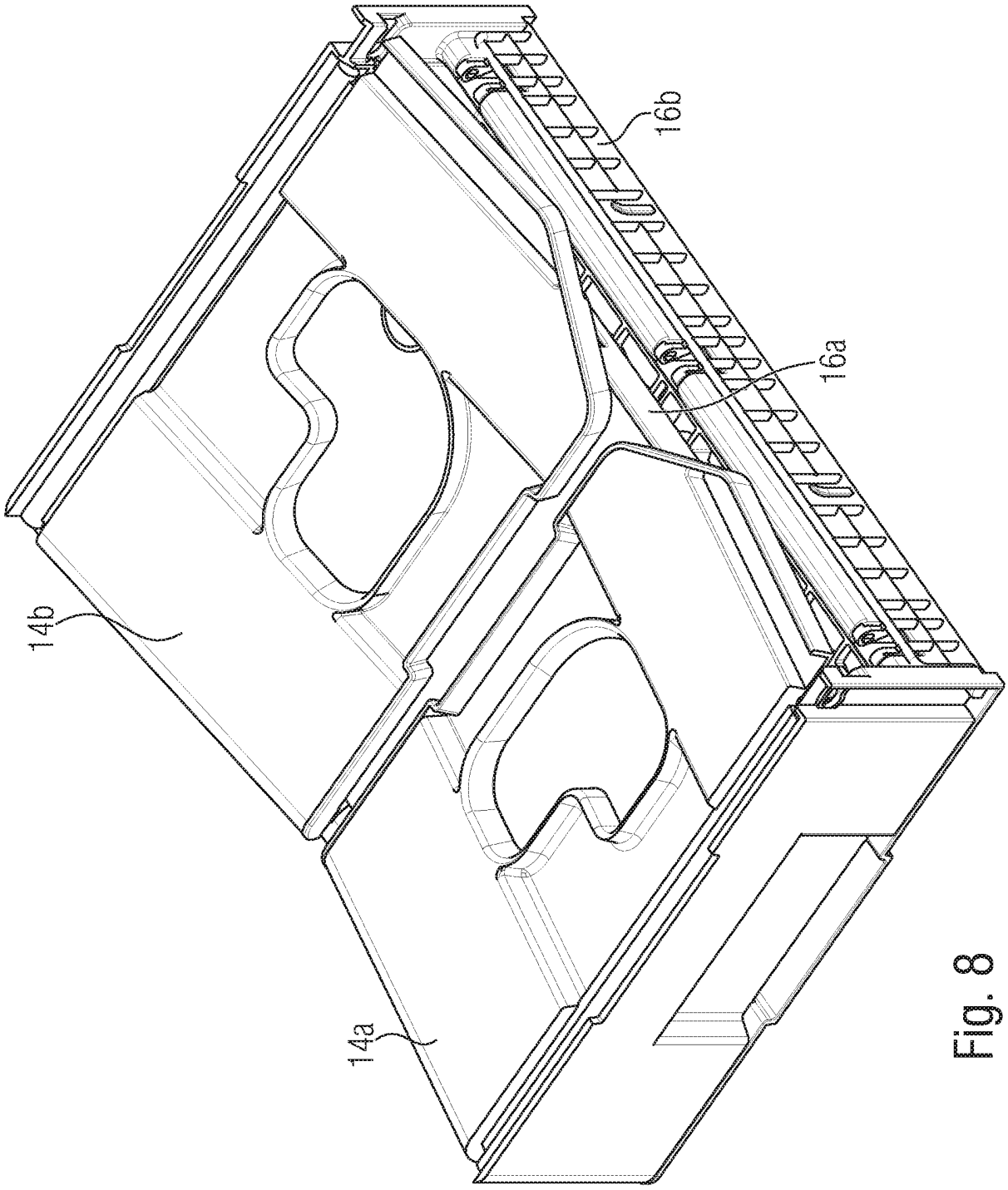

Fig. 8

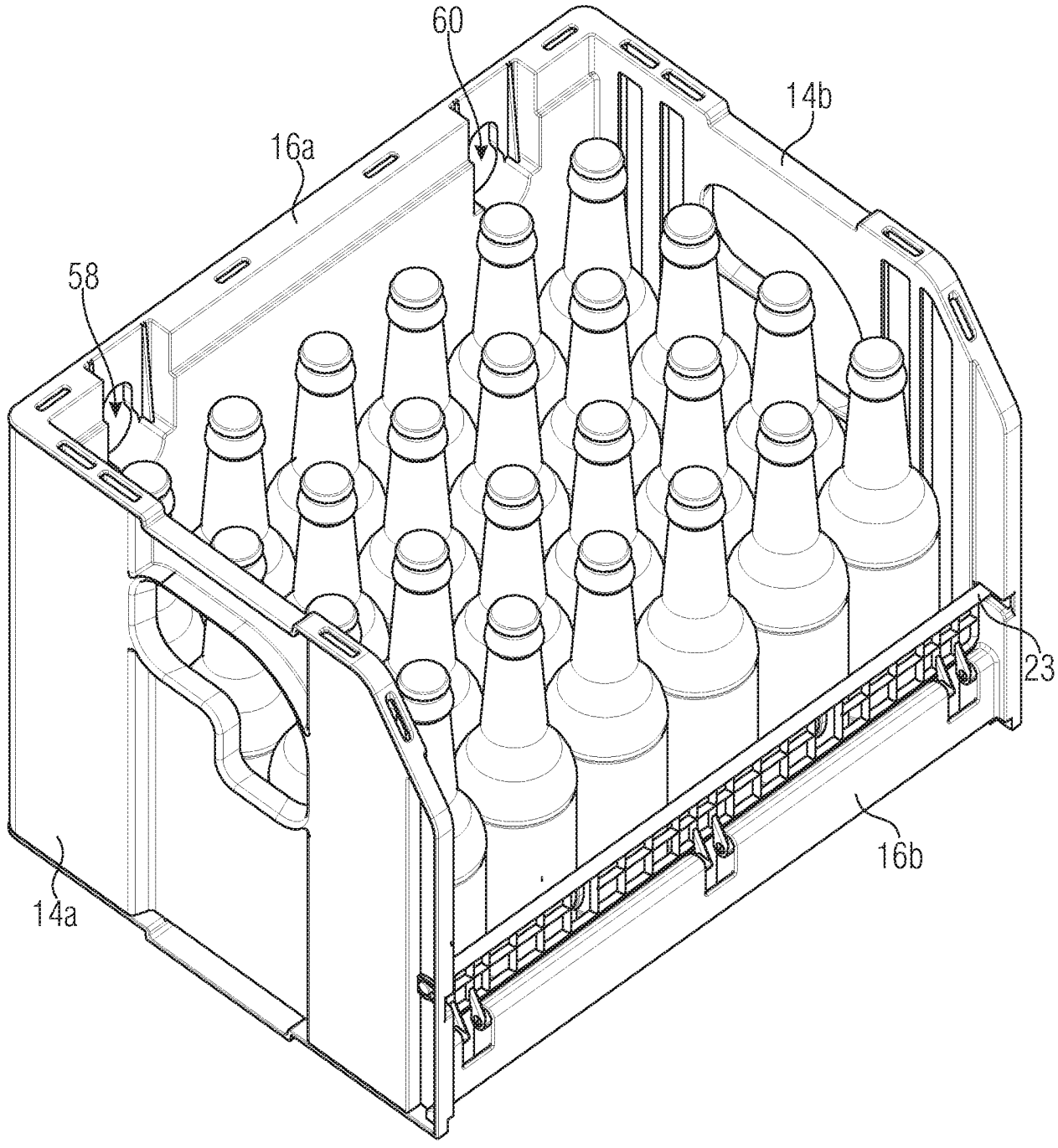

Fig. 9

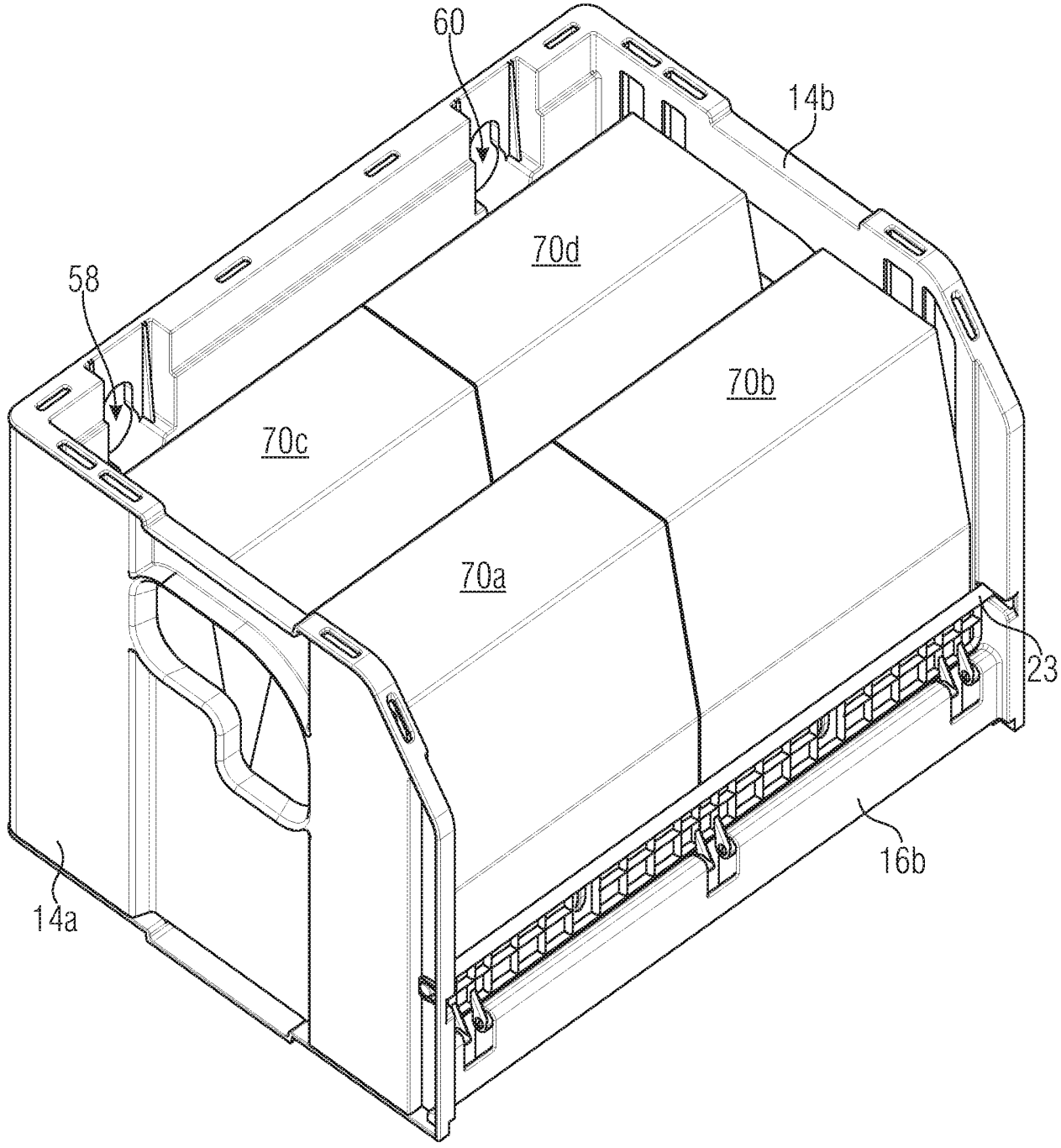

Fig. 10

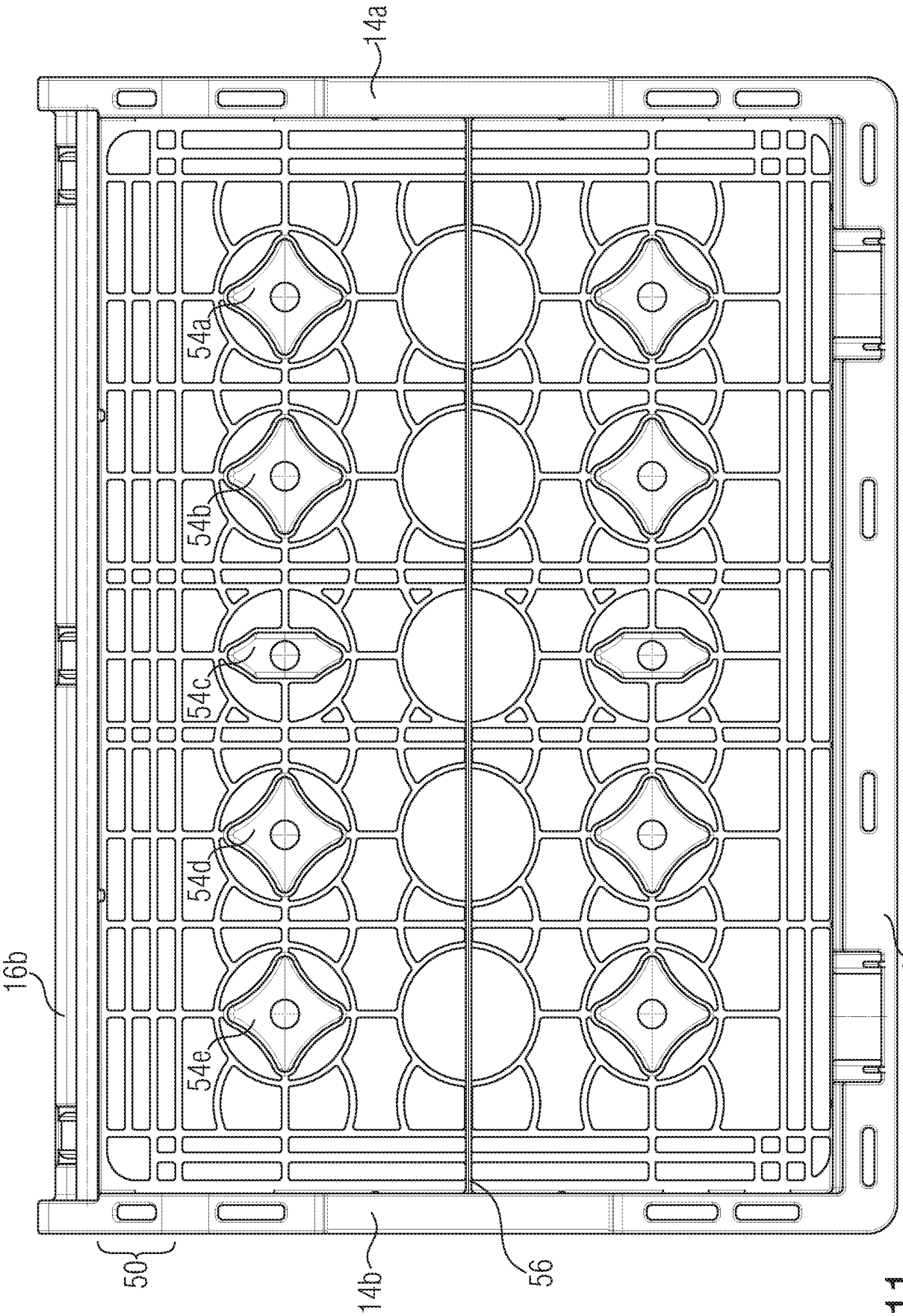

Fig. 11

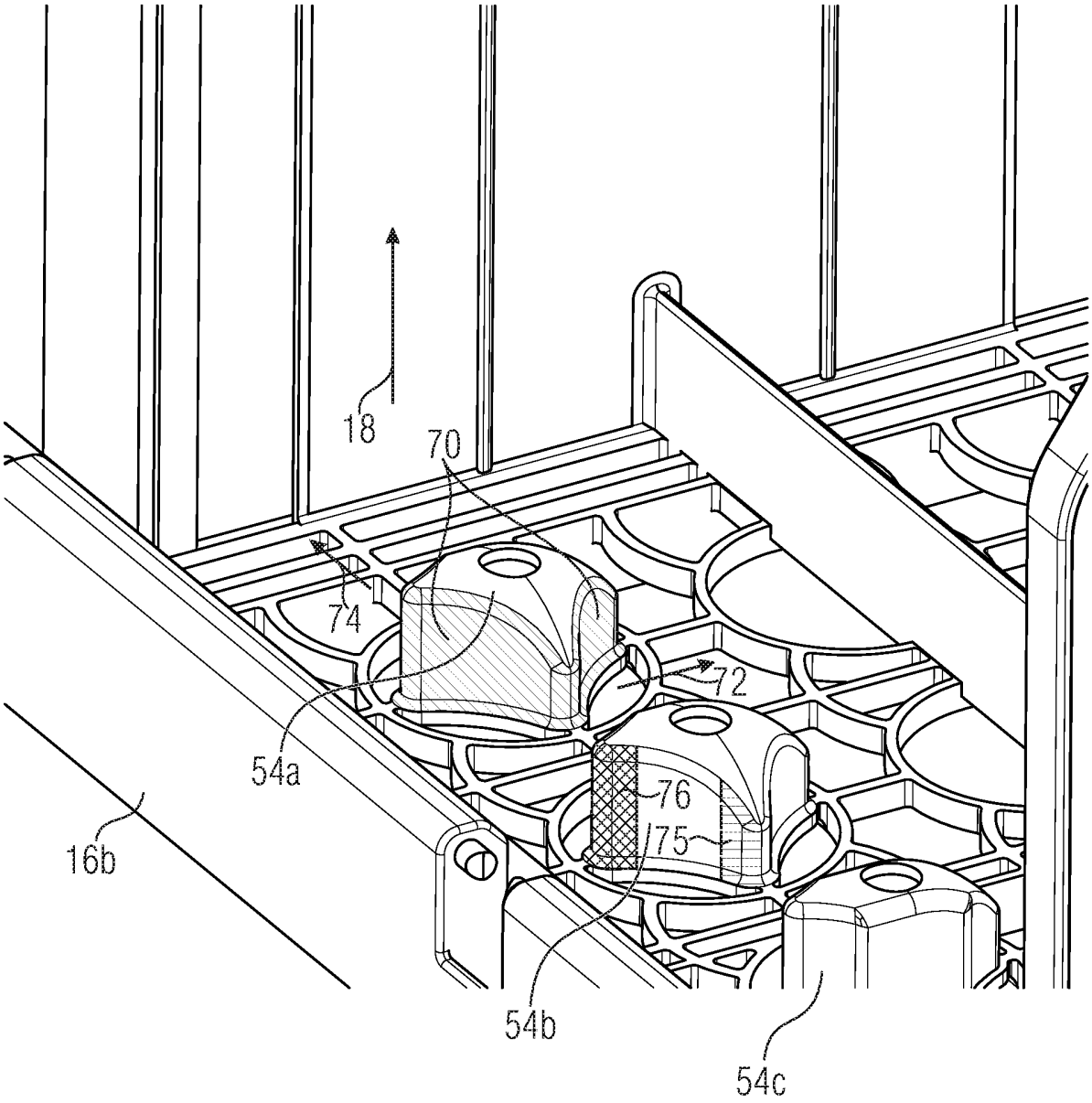

Fig. 12

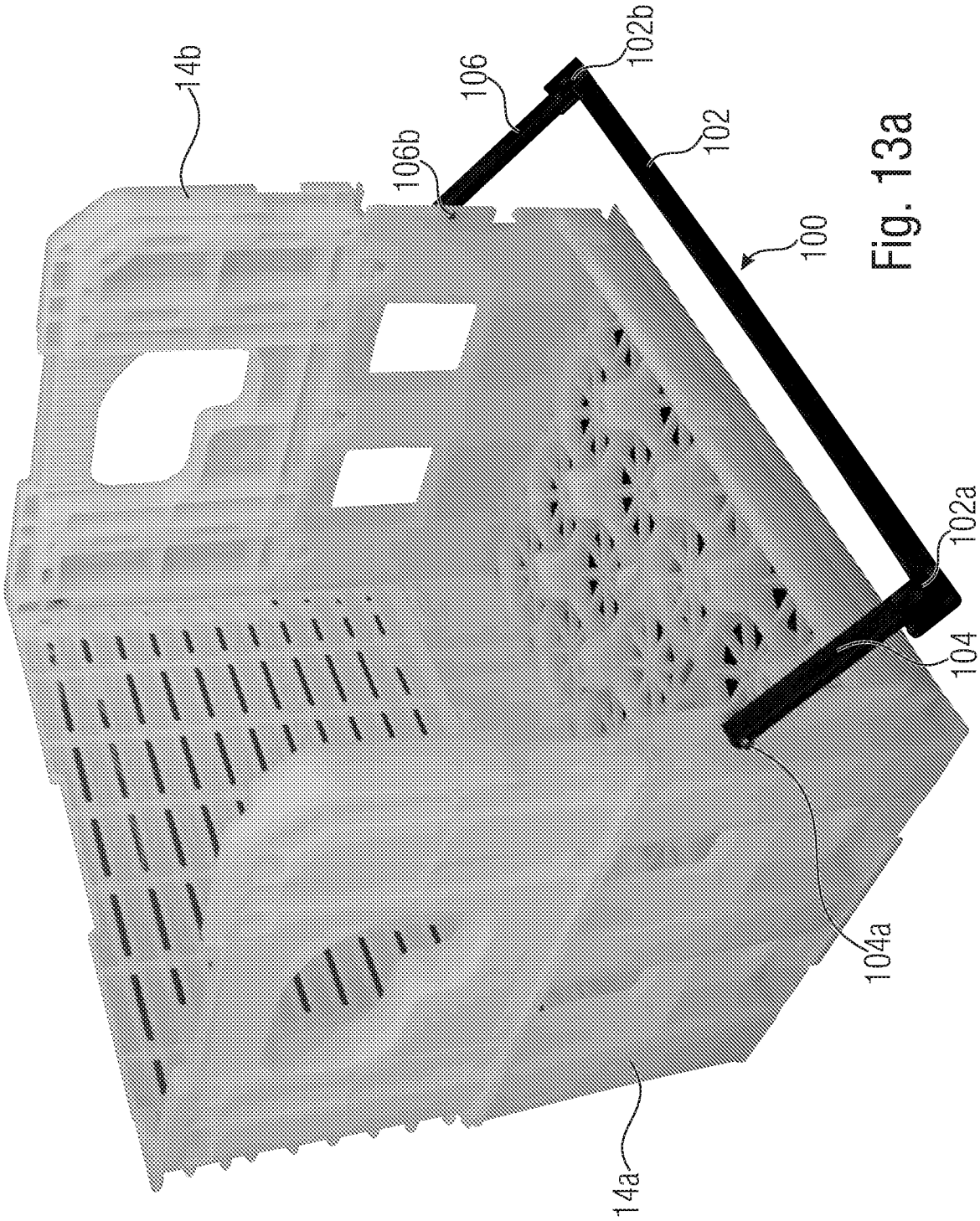

Fig. 13a

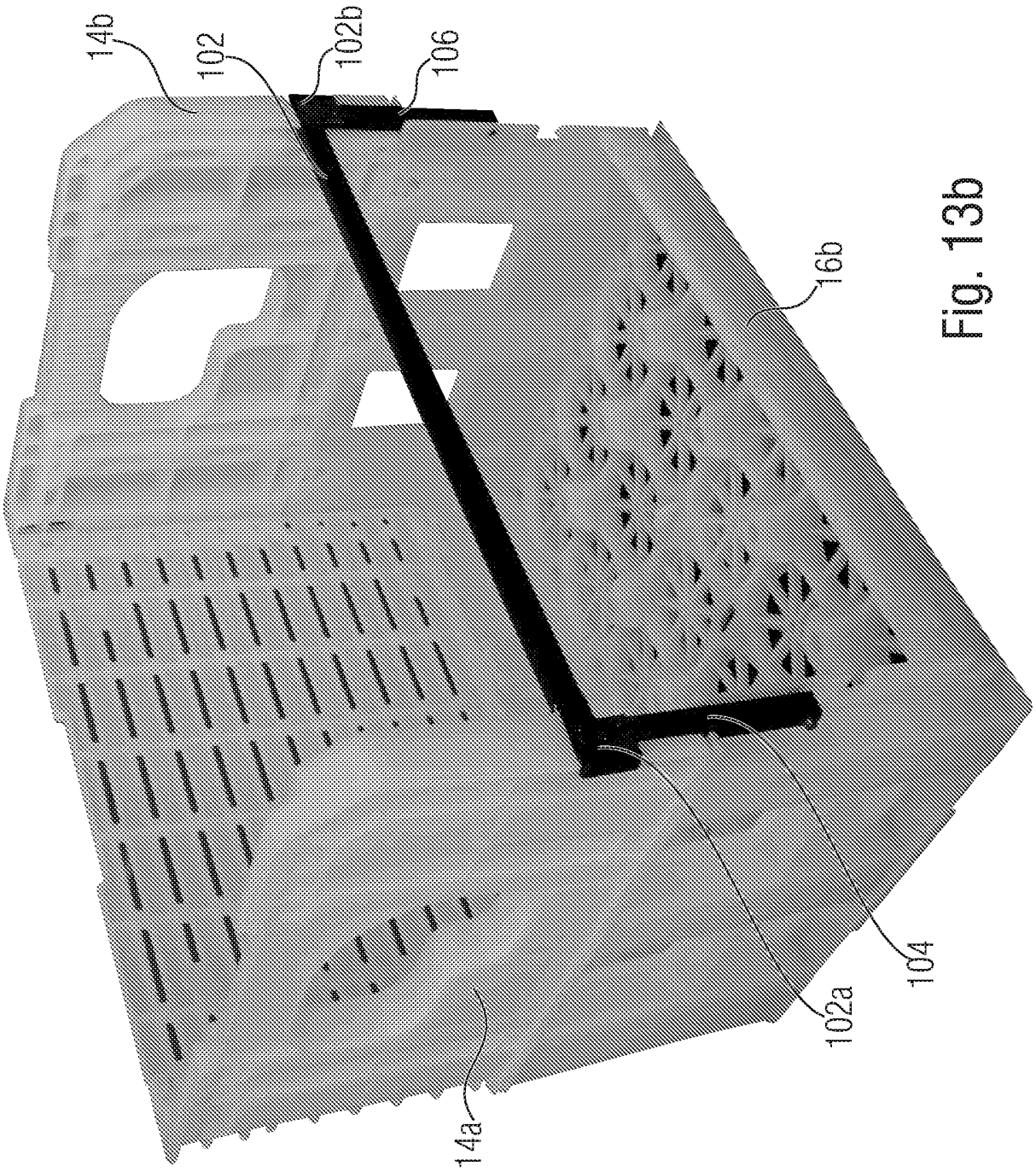

Fig. 13b

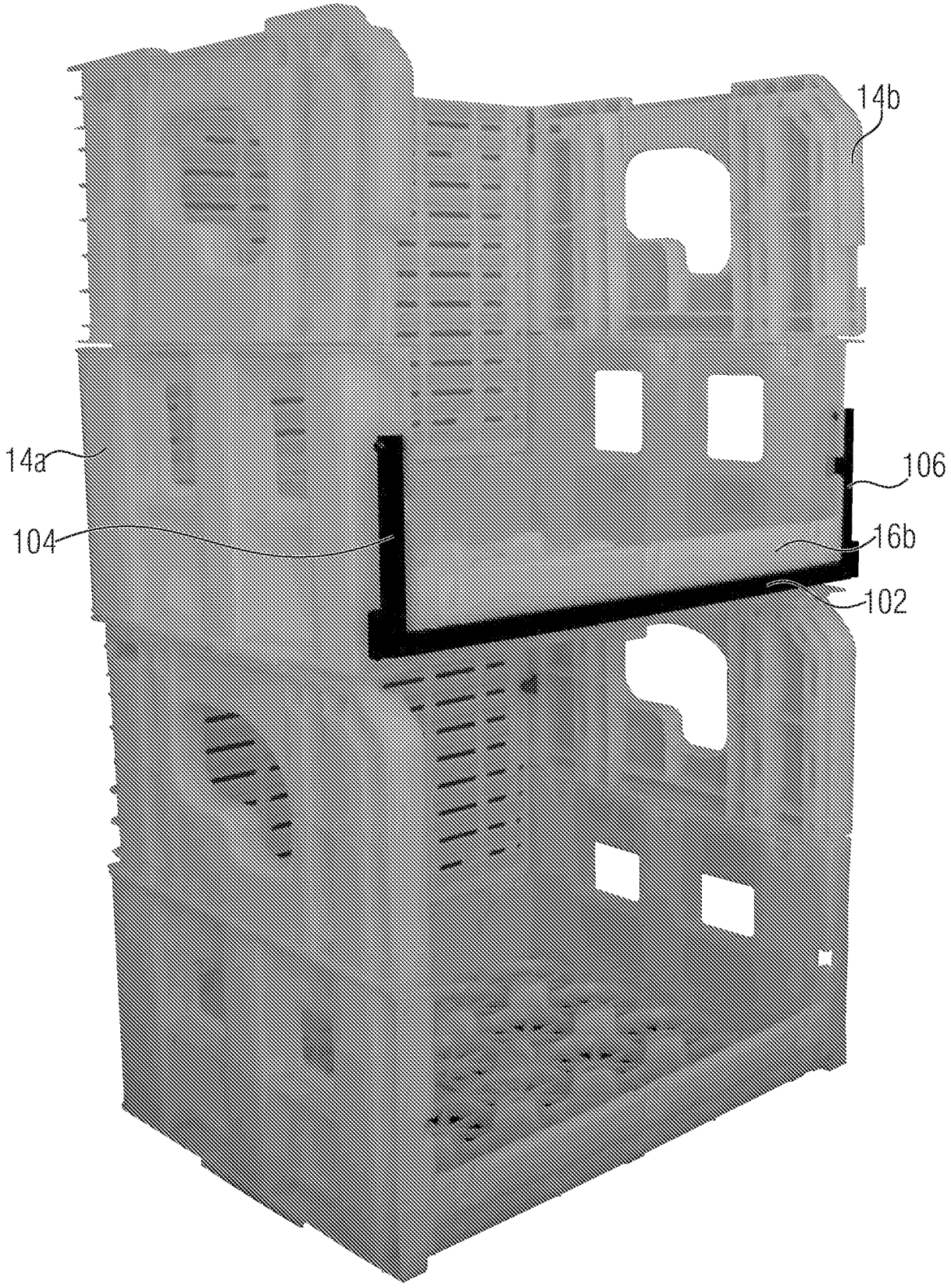

Fig. 14

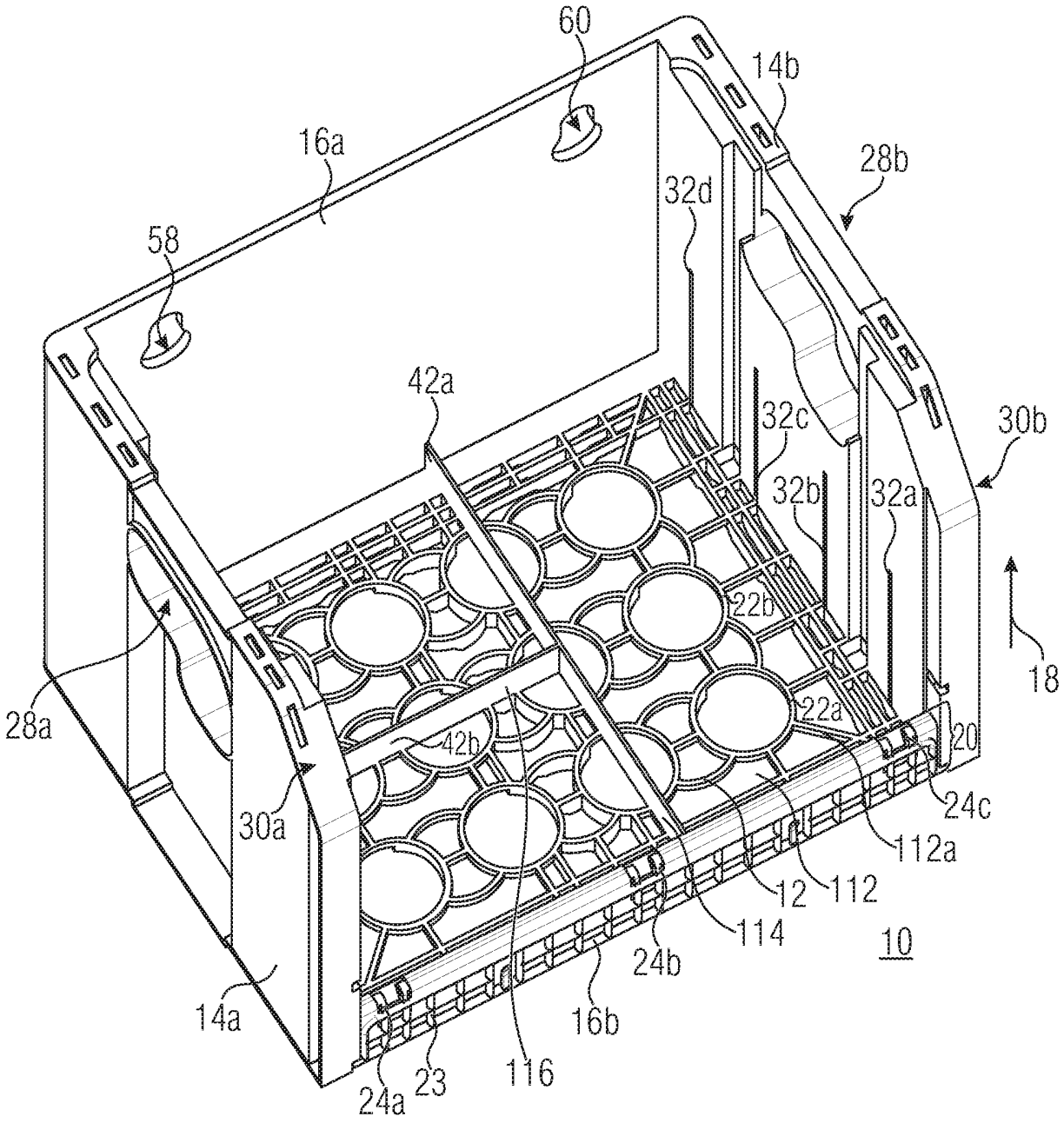
60
14b
16a
28b
32d
58
42a
32c
30b
32b
32a
22b
18
28a
22a
42b
20
30a
24c
112a
12
112
114
10
24b
14a
16b
24a
23
116

Fig. 15

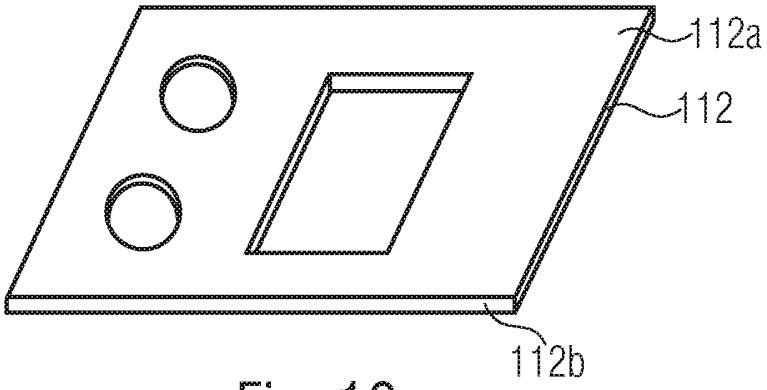

Fig. 16a

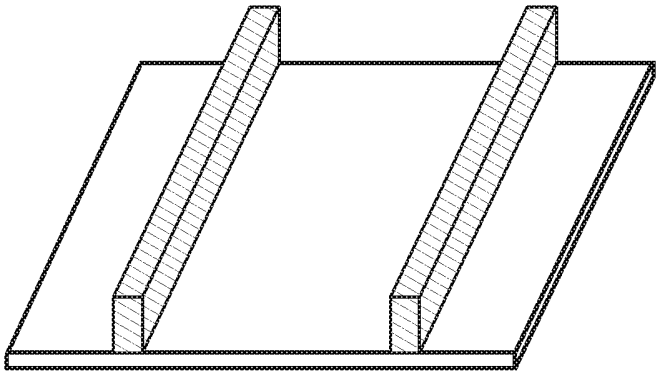

Fig. 16b

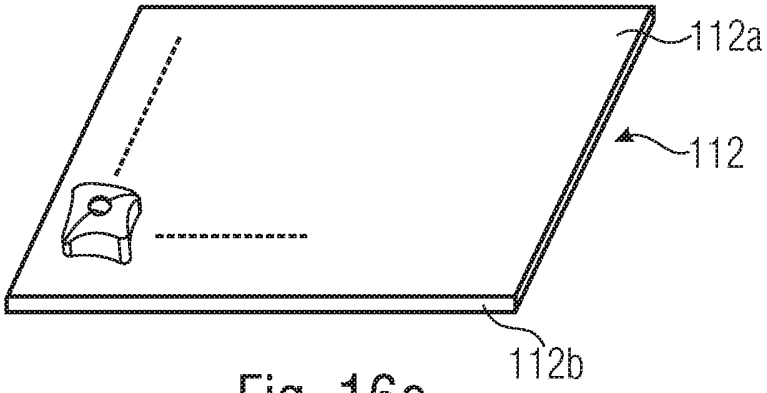

Fig. 16c

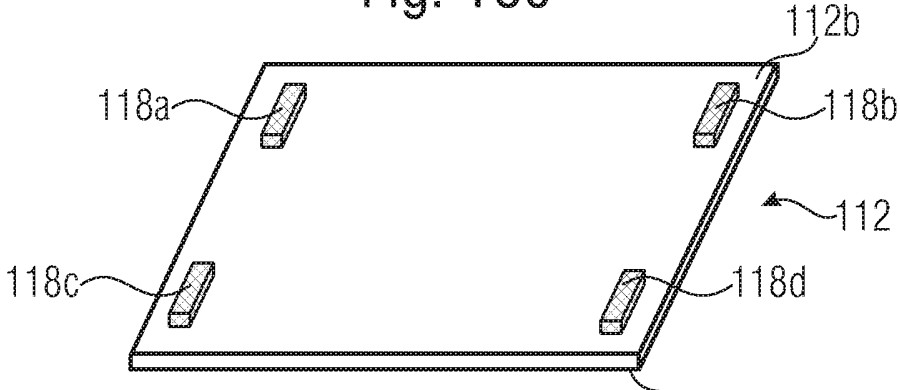

Fig. 16d