May 10, 1927. 1,628,179

L. D. NELSON

BAG FILLING MACHINE

Filed May 12, 1926 9 Sheets-Sheet 1

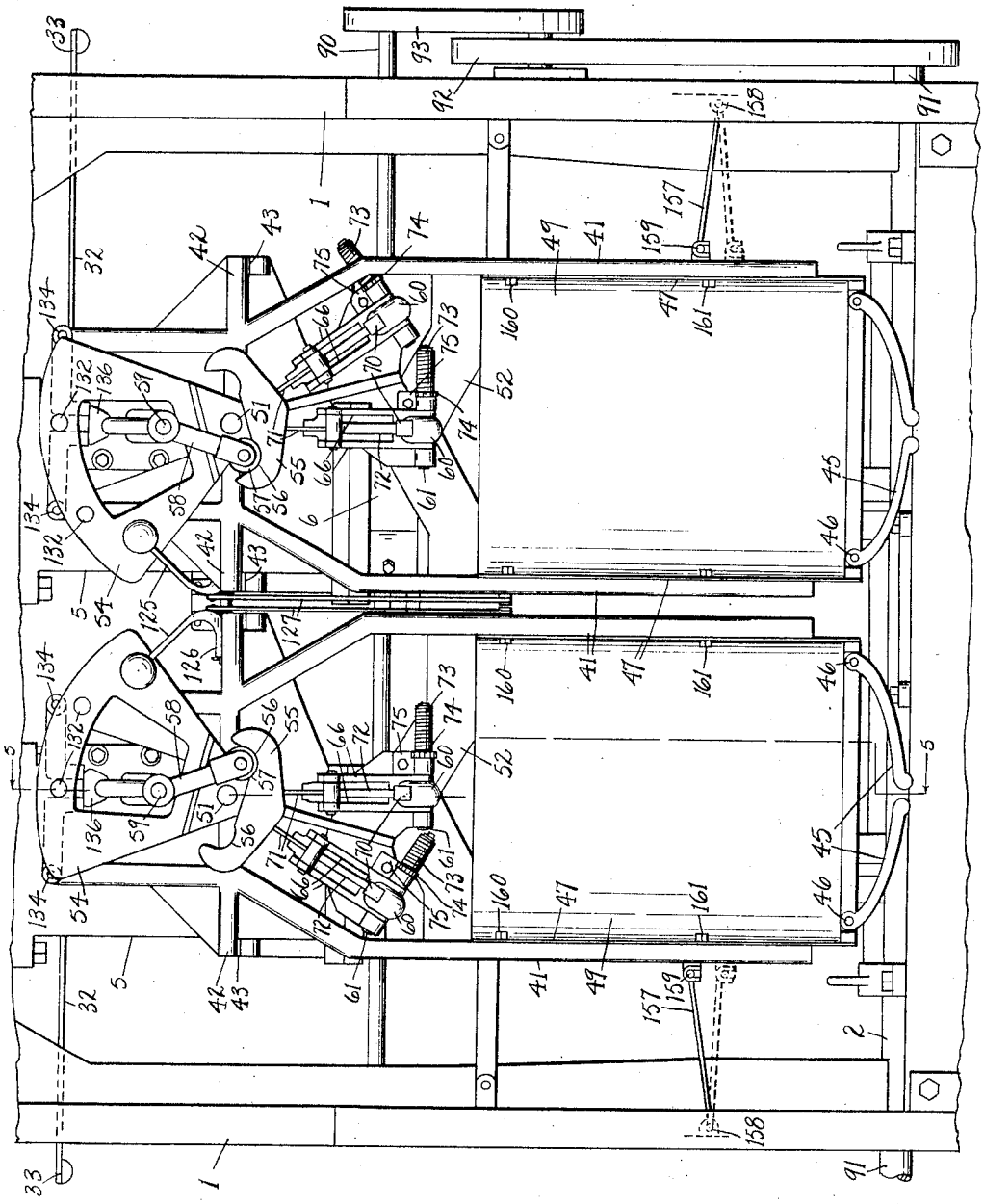

Fig. 1.

INVENTOR
Lewis D. Nelson
BY Chappell & Earl
ATTORNEYS

May 10, 1927. 1,628,179

L. D. NELSON

BAG FILLING MACHINE

Filed May 12, 1926 9 Sheets-Sheet 2

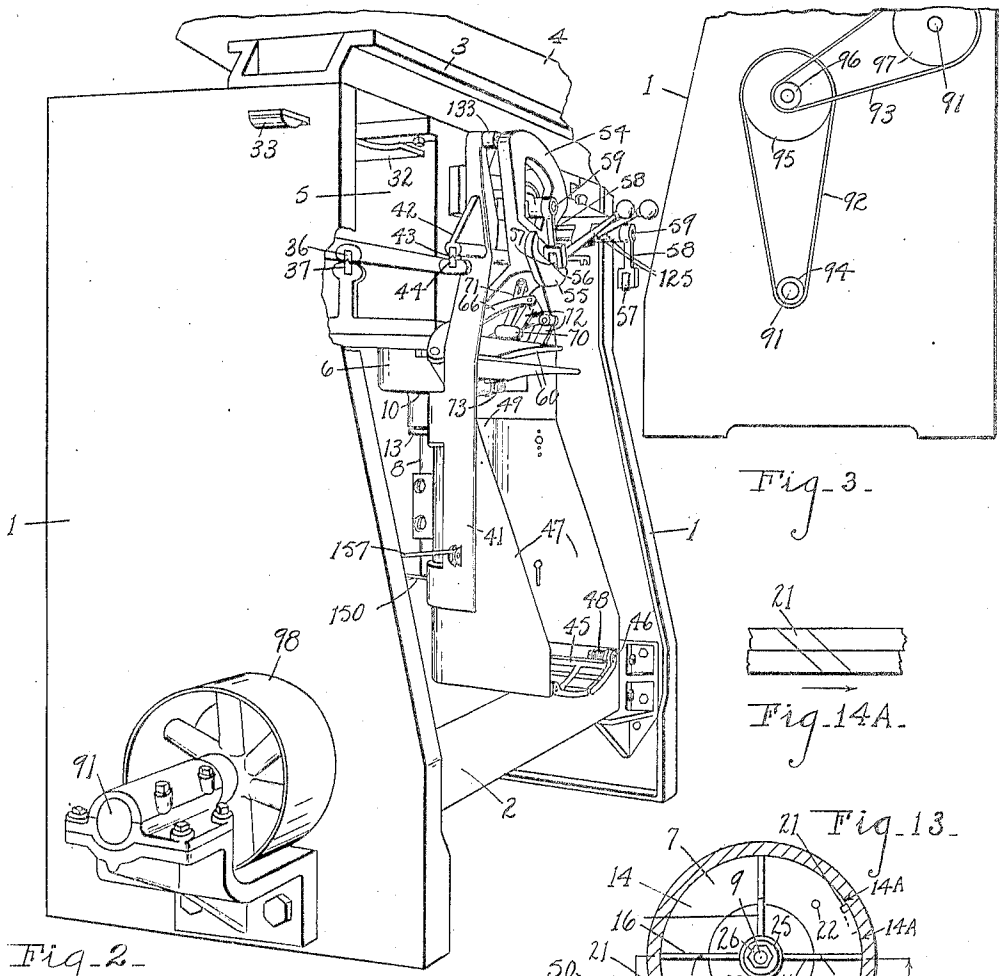

Fig. 2.

Fig. 3.

Fig. 14A.

Fig. 13.

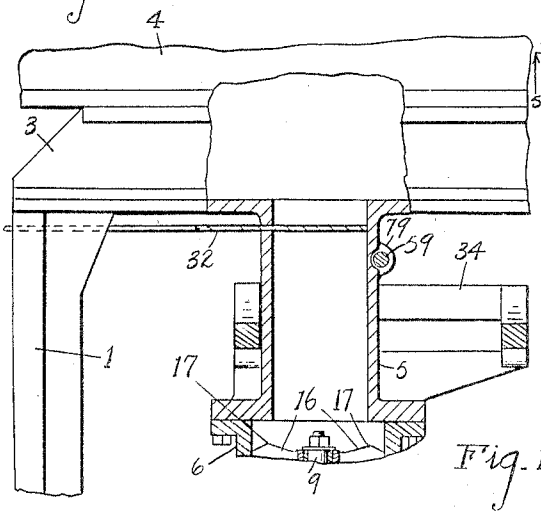

Fig. 15.

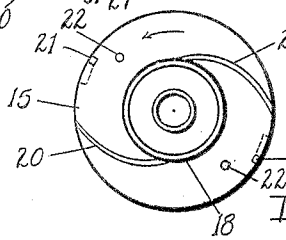

Fig. 14.

INVENTOR
Lewis D. Nelson
BY Chappell & Earl
ATTORNEYS

May 10, 1927. 1,628,179

L. D. NELSON

BAG FILLING MACHINE

Filed May 12, 1926 9 Sheets-Sheet 3

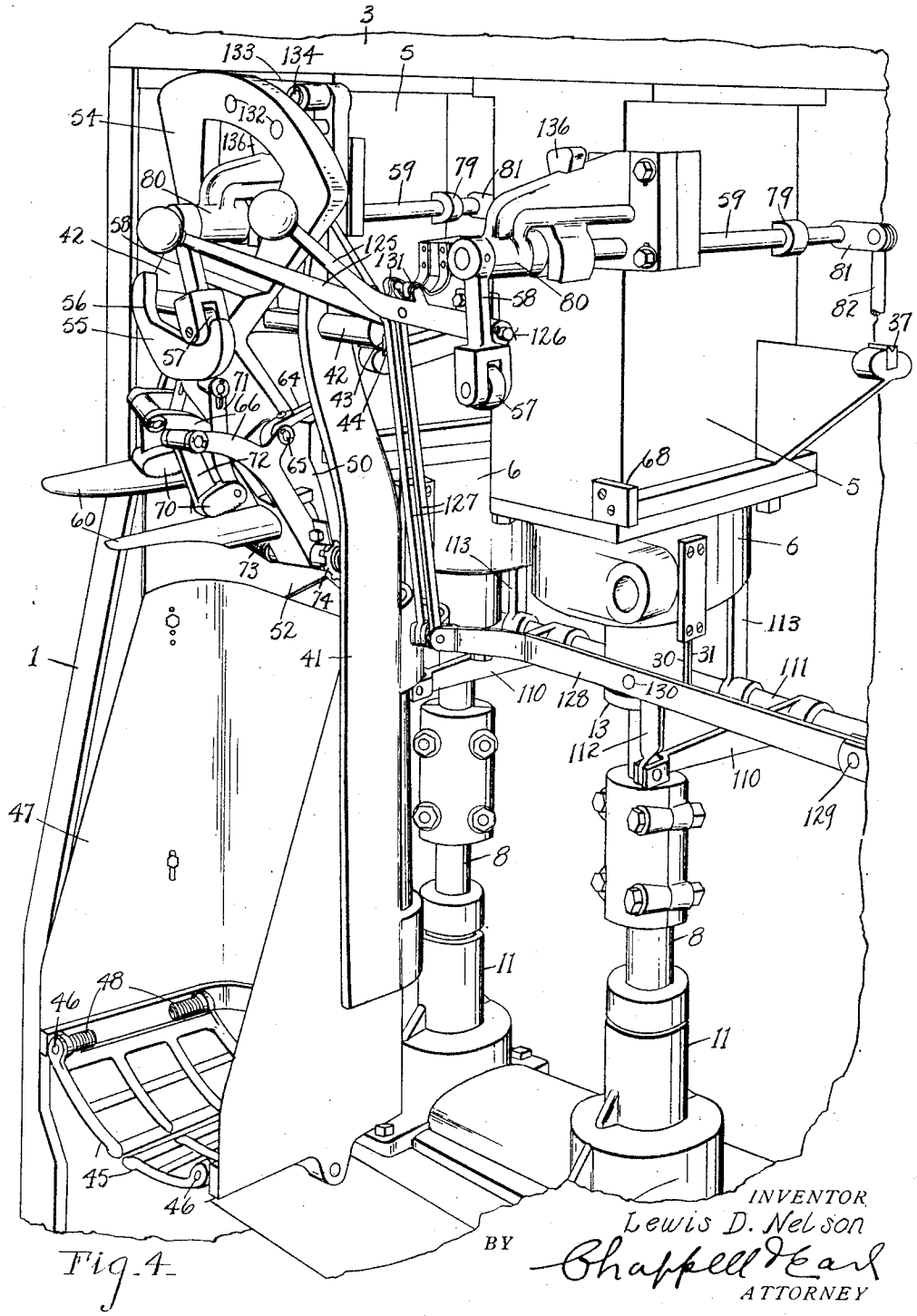

Fig. 4.

INVENTOR
Lewis D. Nelson
BY Chappell & Earl
ATTORNEY

May 10, 1927. 1,628,179

L. D. NELSON

BAG FILLING MACHINE

Filed May 12, 1926 9 Sheets-Sheet 4

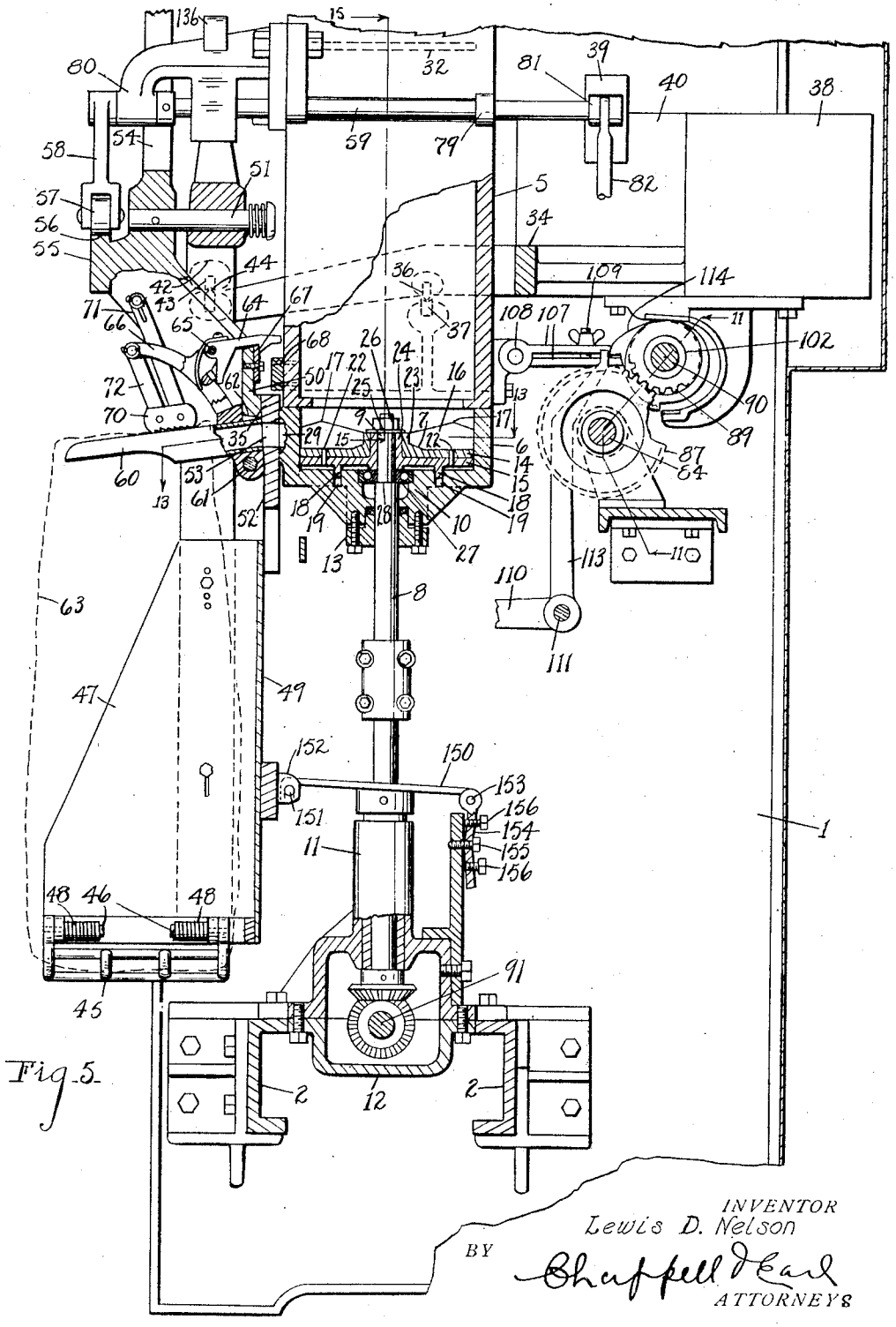

Fig. 5.

INVENTOR
Lewis D. Nelson
BY
Chappell & Earl
ATTORNEYS

May 10, 1927. 1,628,179

L. D. NELSON

BAG FILLING MACHINE

Filed May 12. 1926 9 Sheets-Sheet 5

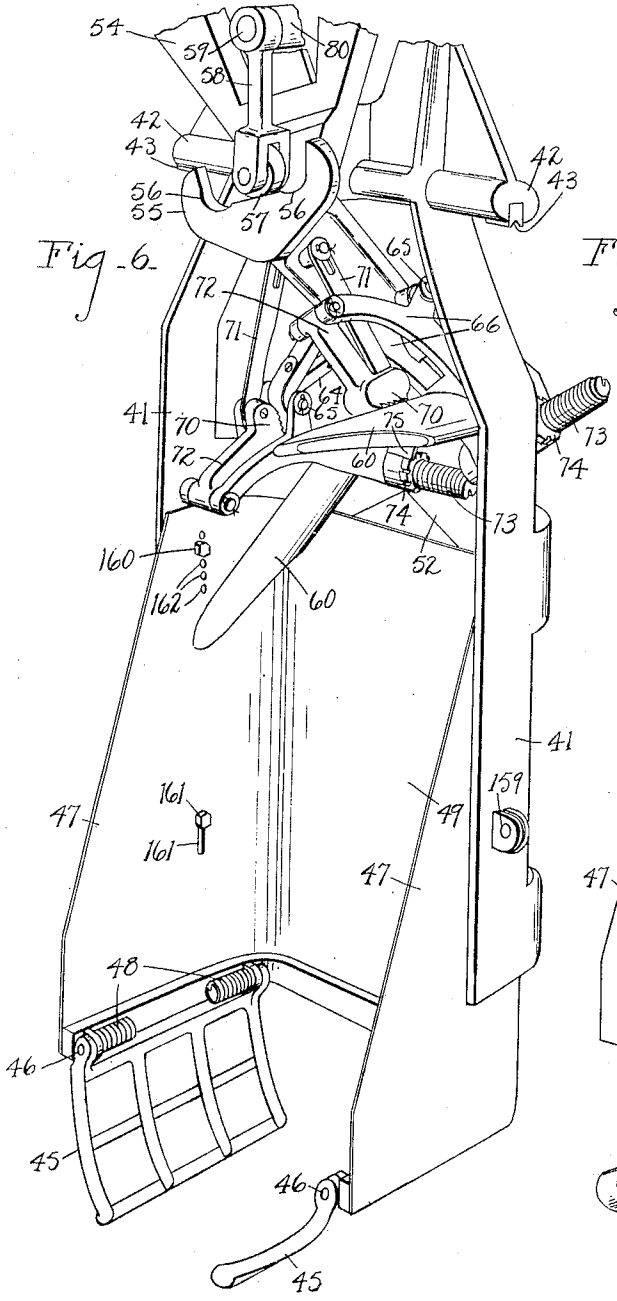

Fig. 6.

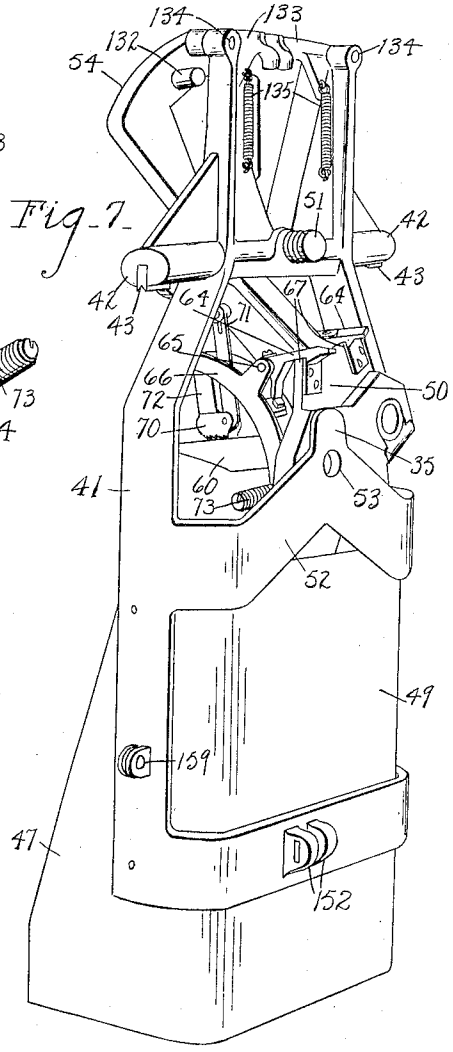

Fig. 7.

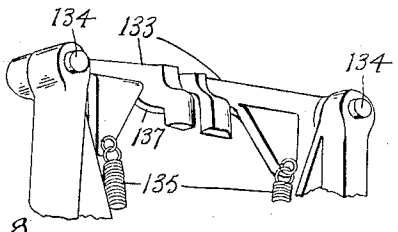

Fig. 8.

INVENTOR
Lewis D. Nelson
BY Chappell & Earl
ATTORNEYS

May 10, 1927. 1,628,179

L. D. NELSON

BAG FILLING MACHINE

Filed May 12, 1926 9 Sheets-Sheet 6

Fig. 9.

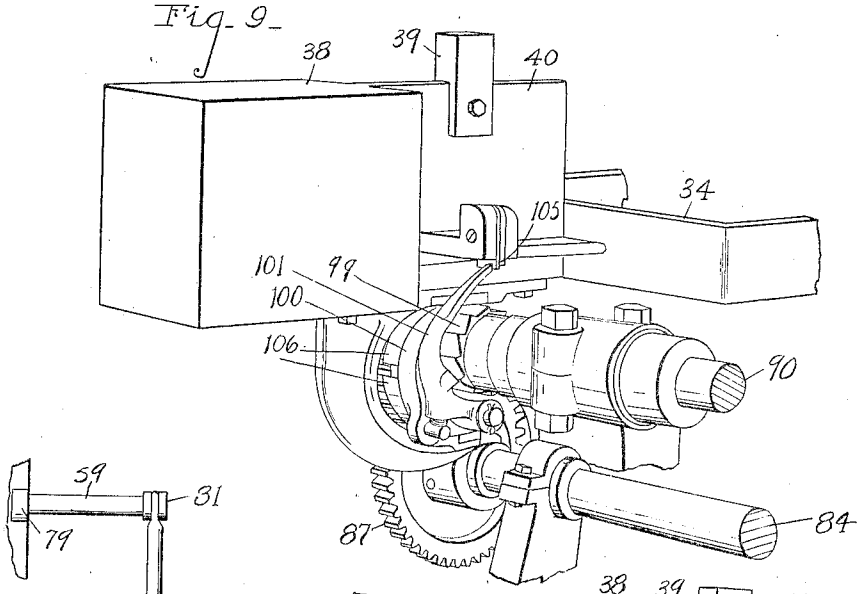

Fig. 10.

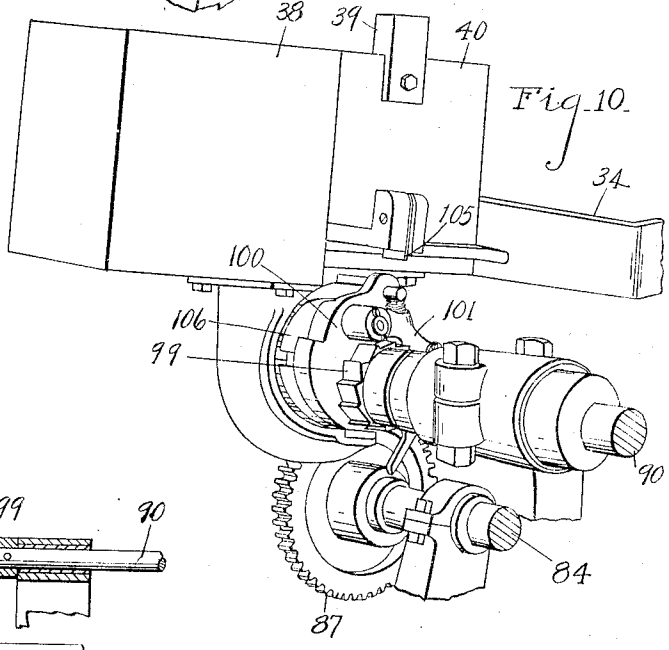

Fig. 12.

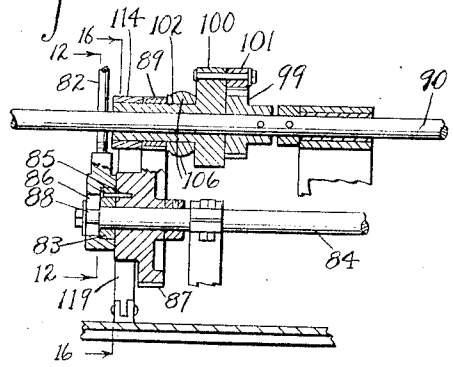

Fig. 11.

INVENTOR
Lewis D. Nelson
BY Chappell & Earl
ATTORNEYS

May 10, 1927. 1,628,179

L. D. NELSON

BAG FILLING MACHINE

Filed May 12, 1926 9 Sheets-Sheet 7

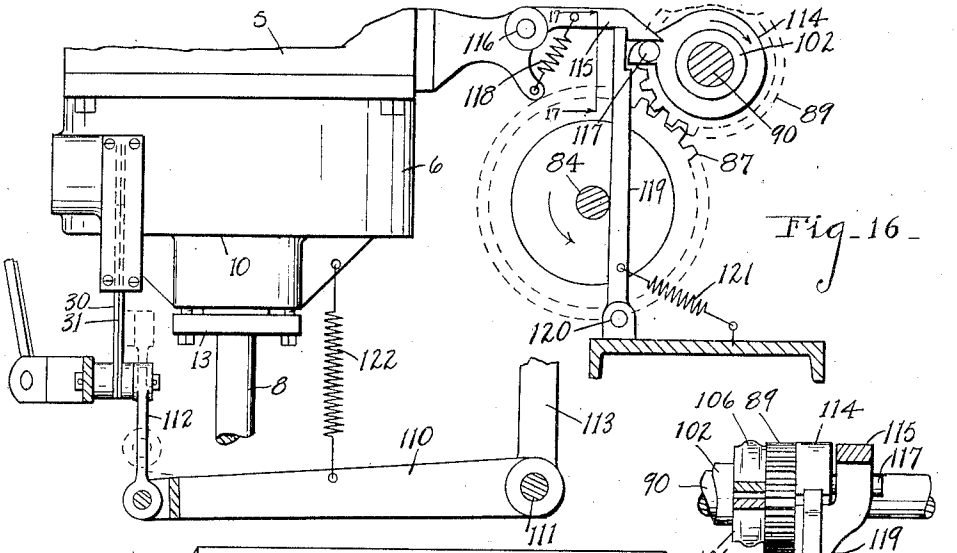

Fig-16-

Fig-17-

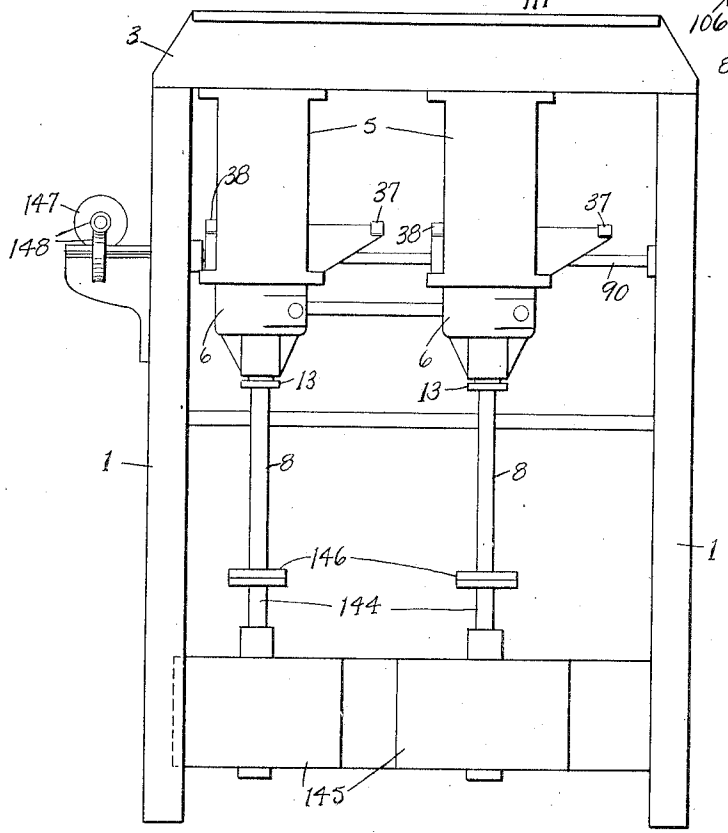

Fig-21-

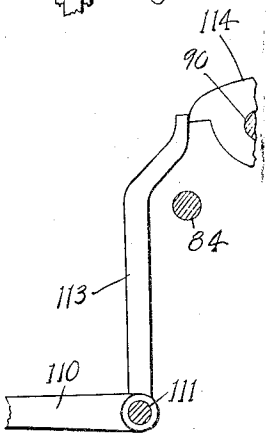

Fig-18-

INVENTOR
Lewis D. Nelson
BY Chappell & Eail
ATTORNEYS

May 10, 1927. 1,628,179

L. D. NELSON

BAG FILLING MACHINE

Filed May 12, 1926 9 Sheets-Sheet 8

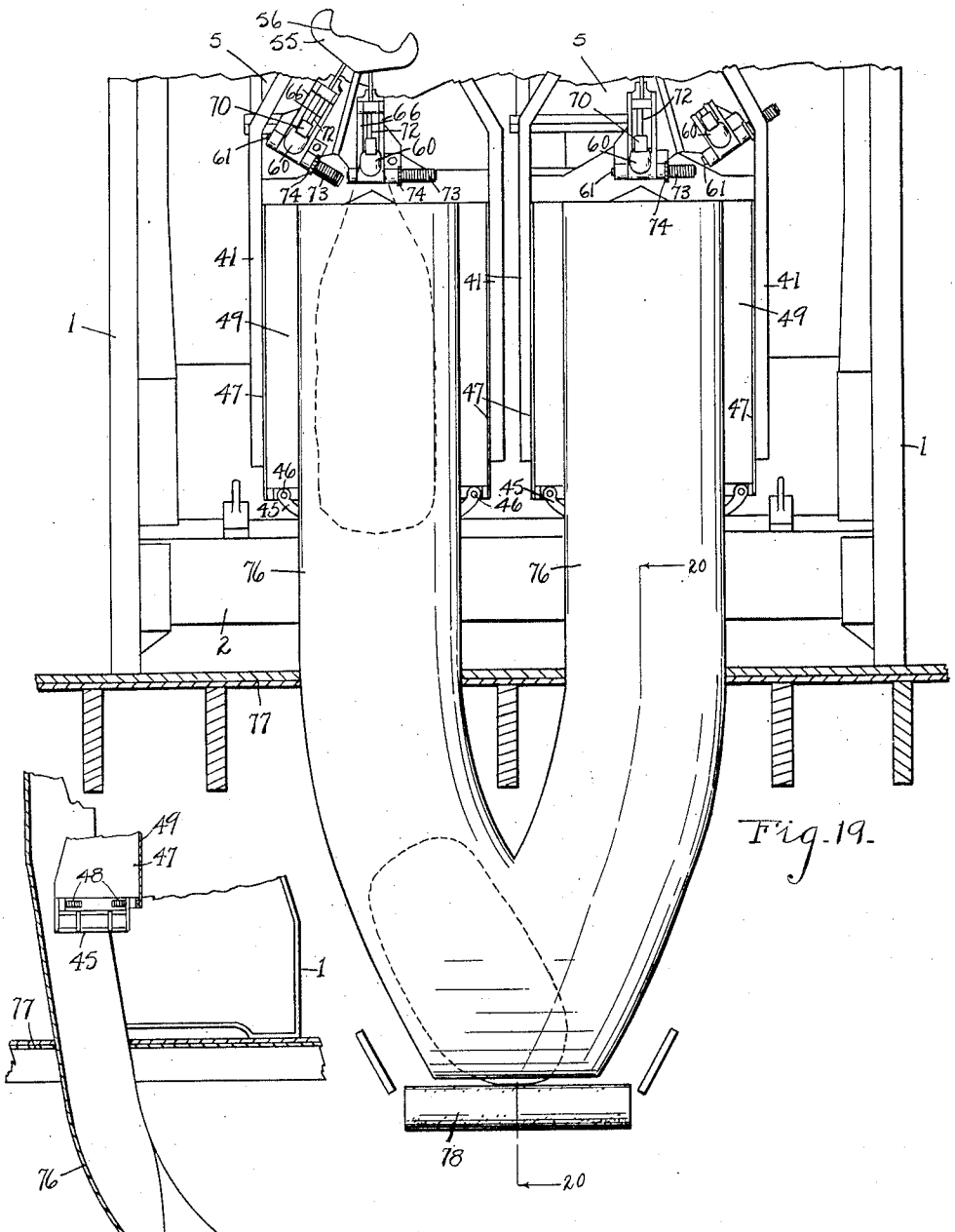

Fig. 19.

Fig. 20.

INVENTOR
Lewis D. Nelson
BY Chappell & Earl
ATTORNEYS

May 10, 1927. 1,628,179

L. D. NELSON

BAG FILLING MACHINE

Filed May 12, 1926 9 Sheets-Sheet 9

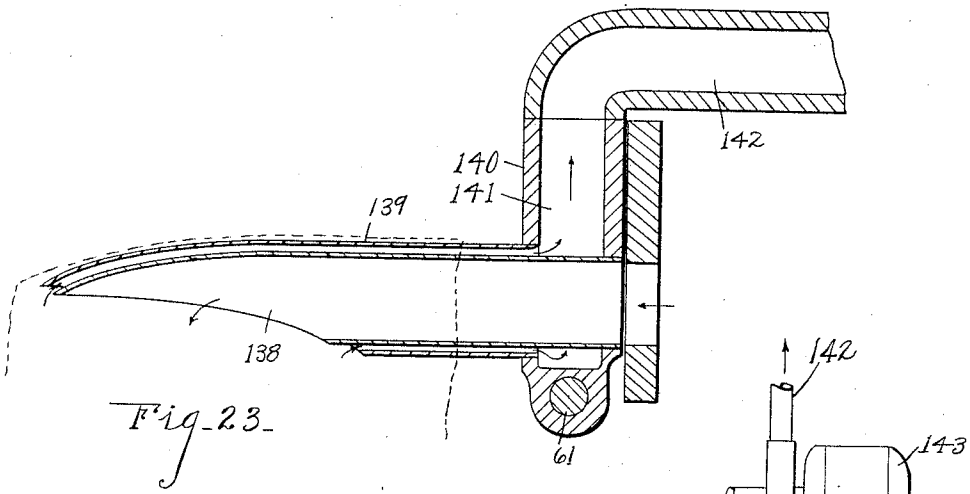

Fig. 23.

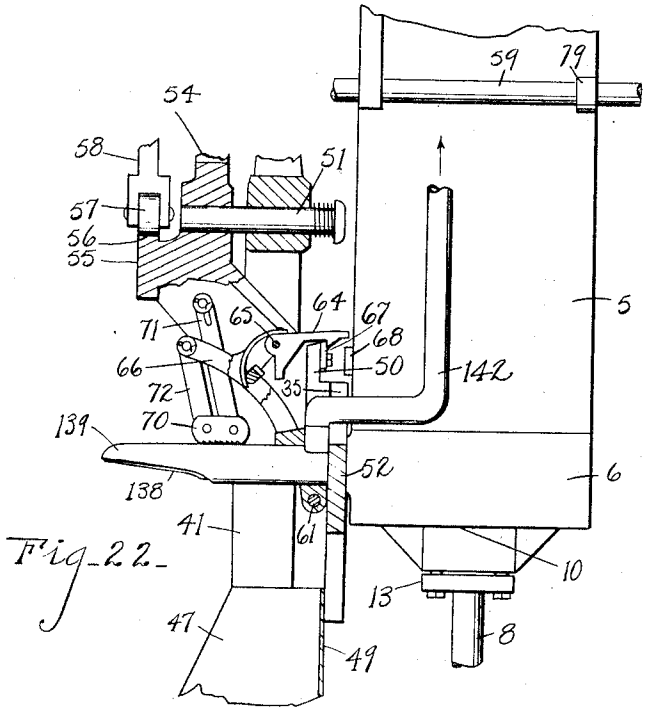

Fig. 22.

INVENTOR
Lewis D. Nelson
BY Chappell & Earl
ATTORNEYS

Patented May 10, 1927. 1,628,179

UNITED STATES PATENT OFFICE.

LEWIS D. NELSON, OF COLDWATER, MICHIGAN, ASSIGNOR OF ONE-HALF TO ROBERT M. NEALE, OF UNION CITY, MICHIGAN.

BAG-FILLING MACHINE.

Application filed May 12, 1926. Serial No. 108,504.

My improvements are especially designed by me for the filling of bags with cement, lime, flour and other heavy materials, the embodiment illustrated being especially designed for the handling of cement. My improvements are, however, readily adapted and desirable for use in other relations and for the handling of other materials.

The main objects of this invention are:

First, to provide an improved packaging machine which is automatic in operation and is controlled by the weight of the filled bags.

Second, to provide an improved packaging machine which is of very large capacity.

Third, to provide an improved machine of the class described for the handling of cement which is not likely to become clogged in use.

Fourth, to provide an improved filling machine of the class described which requires a minimum of manual labor in operating, it only being required that the operator shall place the empty receptacles upon the discharge spout.

Objects pertaining to details and economies of construction and operation of my improvements will definitely appear from the detailed description to follow. The invention is clearly defined and pointed out in the claims.

A structure embodying the features of my invention is clearly illustrated in the accompanying drawing forming a part of this application, in which:

Fig. 1 is a fragmentary front elevation of a filling machine embodying the features of my invention, portions of the hopper and of the lower part of the frame being broken away.

The machine illustrated is a double or duplex machine comprising two complete mechanisms except as to frame, driving and other features common to both.

Fig. 2 is a fragmentary front perspective view, one of the mechanisms being entirely omitted.

Fig. 3 is a fragmentary end elevation looking from the right of Fig. 1 showing details of the driving means.

Fig. 4 is an enlarged fragmentary front perspective view showing structural details, the main portion of one of the units being omitted to better illustrate structural details.

Fig. 5 is a detail view mainly in vertical section from front to rear through one of the units on a line corresponding to line 5—5 of Fig. 1.

Fig. 6 is a fragmentary front perspective view of one of the units with the parts in receptacle or bag discharging position.

Fig. 7 is a rear perspective view of one of the units, the scale beam and certain other parts being omitted.

Fig. 8 is an enlarged rear perspective of the locking or positioning means for retaining the parts in a definite relation during certain periods of operation.

Fig. 9 is a fragmentary rear perspective view of the control mechanism, the parts being shown in initial or set position.

Fig. 10 is a fragmentary perspective view corresponding to that of Fig. 9 with the parts in tripped position.

Fig. 11 is a detail view mainly in section on a line corresponding to line 11—11 of Fig. 5 showing details of the valve control and timing mechanism.

Fig. 12 is a detail view partially in section of the actuating mechanism.

Fig. 13 is a horizontal view partially in section on a line corresponding to line 13—13 of Fig. 5.

Fig. 14 is an inverted view of the impeller.

Fig. 14^A is a fragmentary edge view of the rotor on a line corresponding to line 14^A—14^A of Fig. 13.

Fig. 15 is a fragmentary view partially in vertical section on a line corresponding to line 15—15 of Fig. 5.

Fig. 16 is a detail view mainly in section on a line corresponding to line 16—16 of Fig. 11, showing details of the valve mechanism and means for preventing overthrow.

Fig. 17 is a detail view partially in section on a line corresponding to line 17—17 of Fig. 16.

Fig. 18 is a fragmentary detail section further illustrating the parts shown in Fig. 5.

Fig. 19 is a fragmentary front elevation showing the arrangement of the discharge chute.

Fig. 20 is a fragmentary section on a line corresponding to line 20—20 of Fig. 19.

Fig. 21 is a front elevation of a modified form of my invention in which direct driving means are provided for the motors, only such parts being here shown as are deemed

necessary to show the relation of the motors to the impeller.

Fig. 22 is a fragmentary view of another modification, the modification being in the discharge or filling tube.

Fig. 23 is a fragmentary vertical section through the filling tube of the embodiment shown in Fig. 22.

Referring to the drawing, I provide a suitable supporting frame consisting in the structure illustrated of the side members 1 connected by suitable cross pieces 2, 2 and a top piece 3, these parts being arranged to provide suitable supports for the operating mechanisms. The hopper 4 is mounted above so that the material is fed down by gravity. The structure shown in Fig. 1 is a double unit machine with the units arranged side by side to be operated by a single operator. However, as the units are duplicates a description of one will be sufficient.

The material such as cement is supplied to the hopper 4 by any suitable means. The hopper has a discharge neck 5 for each unit which is, in effect, a part of the hopper.

At the bottom of the hopper is an ejector cylinder 6 open at the top to the hopper. Within this cylinder is a rotor designated generally by the numeral 7, the rotor being disposed horizontally in the bottom of the cylinder. This rotor is mounted on the vertical shaft 8 supported in a bearing 9 in the bottom 10 of the cylinder and suitable bearing 11 on the gear box 12 which is mounted on the cross pieces 2 of the frame. A packing gland 13 is provided for the shaft 8.

The rotor in the embodiment illustrated is made up of two plate-like members 14 and 15 which, however, are secured together so that they rotate as a unit with the shaft. The top rotor member 14 is provided with radial blades 16 the upper edges of which are preferably inclined in both directions, the high points 17 being at the outside of the longitudinal centers of the blades. The bottom member 15 has an annular rib 18 on its under side which projects into the annular groove 19 in the bottom of the cylinder, this serving as a bearing protecting means.

At the outside of this protector rib 18 the bottom plate 15 of the rotor is provided with rib-like clearing blades 20 which are tangentially disposed relative to the protector rib 18 to sweep any material which may pass around the edges of the rotor outwardly. The rotor has inclined clearance grooves 21 in its periphery, these being inclined rearwardly relative to the direction of rotation so that the material carried outwardly by the clearance blades 20 is carried upwardly through these clearance grooves above the rotor and it is found that the bearings are very effectively protected by this means.

The members 14 and 15 are pinned together by means of the pins 22. The member 15 has a hub portion 23 embracing the shaft while the member 14 has a hub portion 24 embracing the hub portion of the member 15. A retaining disk 25 engages the upper ends of these hub portions, the parts being clamped together by means of the nut 26 threaded upon the upper ends of the shaft. The rotor rests upon the member 27 of the bearing 9 which engages the shoulder 28 on the shaft 8.

With this arrangement the parts are quite simple in structure and easily assembled and the separate parts may be renewed as occasion requires.

The discharge 29 of the cylinder is tangentially disposed and is controlled by a pair of slide valves 30 and 31, the valve 30 being manually controlled while the valve 31 is automatically controlled. It will be understood that the valve 30 is used only when the machine is shut down or in emergencies; that is, the automatic valve normally controls the feeding of the material.

The material may be cut off entirely from the cylinder by means of a slide valve 32 extending through the side of the neck of the hopper and operated from the handpiece 33. This cut-off valve 32 is operated when it is desired to cut off the hopper to clear the rotor or for repairs and the like.

The material is controlled by a weighing mechanism comprising a scale beam 34, the scale beam being bifurcated and arranged with its arms embracing the neck 5 of the hopper. The arms have knife edge bearings 36 coacting with bearings 37 at the sides of the hopper portions 5. At its rear end the scale beam is provided with a weight 38 which in the embodiment illustrated is cast integrally therewith and with an adjusting weight 39 mounted on the web-like extension 40 of the weight 38, this web-like extension forming in effect a scale bar which may be graduated if desired. No graduations, however, are illustrated.

The scale frame 41 has laterally projecting bearing arms 42 at its upper end provided with bearings 43 resting upon the knife bearing 44 on the forward ends of the scale beam arms. The platform consists of bottom sections 45 pivoted at 46 between the side members 47 of the platform to project inwardly in opposed relation, the platform bottom sections being held normally in erected position by the coiled springs 48. The platform in the embodiment illustrated has a back wall 49.

The tension of the springs 48 is such as to sustain a weight less than that of the filled bag so that as soon as the platform is subjected to the full weight of the filled bag the sections drop downwardly as shown in Fig. 6 to discharge the bag.

The scale beam carries a spout carrier 50 which is mounted on a pivot 51 projecting

forwardly from the head portion or upper end of the scale frame, the upper portion of this carrier being forwardly offset as shown in the drawings, so that its lower portion lies in front of the scale frame cross member 52 which has an opening 53 therein registering with the discharge opening 29 of the ejector cylinder, see Figs. 5, 7 and 13.

The carrier has a counterweight 54 disposed above its pivot and is also provided with an upwardly facing yoke 55 which is centered relative to the pivot 51. This yoke has seats 56 at the ends thereof to receive the roller 57 on the actuating arm 58. This arm is carried by the rockshaft 59. The means for actuating this arm in synchronism with other mechanisms will be described later.

The carrier is provided with a pair of spouts 60 which are pivoted at 61 so as to be successively brought into register with the feed opening in the cylinder or directly into register with the opening 53 in the scale frame cross member 52. The carrier has openings 62 to receive the inner ends of the spouts.

The spouts when erected are inclined forwardly at a substantial angle as shown in Fig. 5 and when released swing downwardly to the position shown in Fig. 6 permitting a filled bag 63 of the valve type to slip from the spout. The spouts are held in erected position by means of the latches 64 which are pivoted at 65 on the upwardly projecting trip arms 66 on the spouts. These latches 64 engage over keepers 67 on the carrier and as the carrier moves downwardly with the scale frame the latches come into contact with the tripping block 68 on the hopper so that they are lifted from their keepers, allowing the spouts to swing or drop downwardly so that the bags 63 slip from the spouts. This downward swinging of the spouts disengages the bag holders 70 which are supported by links 71 pivoted on the carriers and links 72 pivoted on the trip arms. The spouts dropping away from the bag holders releases the bags.

The spouts are swung to their erected position by means of the coiled springs 73 mounted on the spout pivots. Means for adjusting the tension of the springs is provided consisting of the ratchet wheels 74 to which one end of the spring is connected, and detents 75 which may be adjusted to prevent the turning of the ratchets and readjusted to secure the ratchets in their adjusted positions. The downward movement of the scale frame moves the closure plate 75 over the discharge of the cylinder, this serving as a further valve or closure for the discharge passage of the cylinder, although under normal operation, that is, where the valve 31 is functioning properly, the gage valve 35 does not function except perhaps as a shield.

When the bags slip from the spouts the full weight thereof coming upon the platform members 45 causes them to open allowing the filled bags to fall into the branched chute 76, one of the branches being arranged in front of each unit. The upper ends of these chutes are disposed vertically in front of the scale platform so that they serve as guards for the operators manipulating the machine, the chutes being arranged through the platform or floor 77 and discharging into a conveyor 78.

I will now describe the means for oscillating the carrier, or, more particularly, the means for actuating the rockshaft 59 by which the actuating arm 58 is carried.

This rockshaft 59 is supported in suitable bearings 79 and 80 and extends transversely of the machine and is provided at its rear end with an arm 81 to which the upper end of the pitman 82 is connected. The pitman 82 is actuated by a cam 83 which is secured to the gear 87 by means of the pin 85, the gear and the cam rotating together on the shaft 84.

The shaft has an extension 88 arranged through a slot 86 in the pitman for holding the pitman in operative relation to the cam so that when the cam is rotated the pitman is reciprocated. The gear 87 is driven from a pinion 89 on the shaft 90. This shaft is connected to the main drive shaft 91 by means of the belts 92 and 93 and the pulleys 94, 95, 96 and 97, respectively, see Fig. 3. The shaft 91 is provided with a power pulley 98.

The pinion 89 is intermittently driven by means of a pawl and ratchet mechanism controlled by the weighing mechanism. This mechanism is illustrated in detail in Figs. 9, 10 and 11, and consists of the ratchet wheel 99 pinned to the shaft 90. At the side of this ratchet wheel is a pawl carrier 100 carrying the pawl 101 coacting with the ratchet, this pawl carrier having a hub-like extension 102 to which the pinion 89 is secured. The pawl has an extension 104 which is adapted to be engaged by the trip 105 on the scale beam so that when the scale beam is in its normal position the rotation of the pawl while engaged with the ratchet brings its tail or extension into engagement with this trip, thereby disengaging the pawl and releasing the pinion.

To prevent overthrow of the pinion I provide a brake comprising a pair of brake shoes 106 carried by arms 107 pivoted at 108 and provided with an adjusting bolt 109. This insures a complete actuation of the carrier and also a complete stroke of the weighing mechanism, that is, the parts must move their full stroke at each actuation.

The valve 31 is automatically actuated from the lever 110 on the rockshaft 111, the lever being connected to the valve by means

of the link 112. The rockshaft 111 has an upwardly projecting arm 113 which coacts with the cam 114 which is disposed on the shaft 90 at the side of the pinion 89 and is operatively connected with the pinion on the pawl carrier 100.

As an additional positioning means for these parts, that is, supplementing the brake means previously described, I provide a yielding stop 115 which is pivoted at 116 to be engaged by a pin 117 on the cam 114. This stop is held under spring tension by the spring 118. A support 119 is provided for the stop when the pin 117 passes from under the stop. This support 119 is pivoted at 120 and is disengaged by the stop swinging against the cam, the stop being urged toward the cam by the spring 121, see Fig. 16. When the rise of the cam moves to the position shown in Fig. 16 it pushes this support back to the position shown in Fig. 18, the stop dropping down like a tappet to engage the pin 117, accurately positioning these parts for the next stroke. The valve is closed when released by the cam 114 by means of the spring 122.

The manually controlled valves 30 are operated from the hand levers 125 which are pivoted at 126 and connected by the links 127 to the levers 128 which are pivoted at 129 to a frame part and are connected to the valves 30 at 130. The levers 125 project forwardly to be conveniently grasped by the operator. Spring keepers 131 are provided for holding these levers in valve opening position.

To prevent oscillation or vibration of the parts when in filling position I provide the carrier with a pair of stops 132 which are located on the counterbalance 54. A pair of coacting stop members 133 are pivotally mounted on the scale frame at 134 in an opposed relation with their inner ends spaced to receive the pins 132. These stop members are held yieldingly downward by means of the springs 135 and when the parts are in their upper or filling position the stop members engage the rest 136.

As the scale frame moves downwardly these stop members 133 are lifted, owing to their engagement with this rest, so that the stops 132 pass from between the members allowing the carrier to oscillate. On the upward movement of the scale frame, the carrier having been swung to its opposite position, the second stop 132 is engaged by the stops 133. The stops 134 have cammed portions 137 so that the stops 132 may lift the same as the parts swing to position.

To prevent swaying of the platform I provide a link 150 which engages a pin 151 on the ear 152 of the scale frame. This link is pivoted at 153 to a tilting bracket 154 which is supported by the screw 155 and the adjusting screws 156 so that by tilting this bracket the link pivot 153 will be moved forward or backward.

Side swaying of the frames is prevented by links 157 which are pivoted at 158 on the frame and engage the pins 159 on the scale frames.

To permit vertical adjustment of the scale platforms the walls 47 are adjustably supported by means of bolts 160 and 161, the bolts 160 being engageable in holes 162 while the bolts 161 engage slots 163.

In the modification shown in Fig. 23 the spout 138 is provided with a similarly shaped housing or air conduit 139, the base 140 of the spout being chambered to communicate with this conduit 139. The chamber 141 of the spout base communicates with a conduit 142 connected to the suction fan 143. With this arrangement the air is allowed to escape from the bags as they are filled and, further, any dust or material that might escape around the spout is drawn away by the fan, thus protecting the operator.

In the modification of Fig. 21 the shafts 8 are connected to the driving shafts 144 of the motors 145 by the couplings 146. In this embodiment the shaft 90 is driven from a motor 147 through the worm gearing 148.

I have illustrated and described my improvements in an embodiment which I have found very practical. I have not attempted to illustrate the various modifications and adaptations which I contemplate or the adaptations for weighing materials other than cement or the like, as I believe the disclosure made will enable those skilled in the art to embody or adapt my improvements as may be desired.

Having thus described my invention what I claim as new and desire to secure by Letters Patent is:

1. In a structure of the class described, the combination of a feed means including a valve, means for actuating said valve including a cam, a rockshaft provided with an arm coacting with said cam and a second arm connected to said valve by a link, a weighing mechanism including a scale beam, a scale frame carried by said scale beam, a carrier pivotally mounted on said frame for oscillating movement, spouts mounted on said carrier to be alternately brought into operative relation with said feed means, a yoke on said carrier having seats on opposite sides of the carrier pivot, a pivotally mounted actuating lever coacting with said yoke to actuate said carrier as the lever is actuated, an actuating cam for said lever, a rockshaft carrying said lever, said rockshaft being provided with an arm, a pitman connected to said arm and operatively associated with said lever actuating cam, a driving ratchet, a driven member operatively connected to said valve and lever actuating

cams and provided with a pawl coacting with said driving ratchet, a trip member for said pawl operatively associated with said scale beam for releasing the pawl when the scale beam is in its initial position, a friction brake means operatively associated with said driven member, and a positioning means for said driven member adapted to act after its said pawl is disengaged.

2. In a structure of the class described, the combination of a feed means including a valve, means for actuating said valve including a cam, a rockshaft provided with an arm coacting with said cam and a second arm connected to said valve by a link, a weighing mechanism including a scale beam, a scale frame carried by said scale beam, a carrier pivotally mounted on said frame for oscillating movement, spouts mounted on said carrier to be alternately brought into operative relation with said feed means, a yoke on said carrier having seats on opposite sides of the carrier pivot, a pivotally mounted actuating lever coacting with said yoke to actuate said carrier as the lever is actuated, an actuating cam for said lever, a rockshaft carrying said lever, said rockshaft being provided with an arm, a pitman connected to said arm and operatively associated with said lever actuating cam, a driving ratchet, a driven member operatively connected to said valve and lever actuating cams and provided with a pawl coacting with said driving ratchet, and a trip member for said pawl operatively associated with said scale beam for releasing the pawl when the scale beam is in its initial position.

3. In a structure of the class described, the combination of a feed means including a valve, a cam for actuating said valve, a weighing mechanism including a scale beam, a scale frame carried by said scale beam, a carrier pivotally mounted on said frame for oscillating movement, spouts mounted on said carrier to be alternately brought into operative relation with said feed means, a yoke on said carrier having seats on opposite sides of the carrier pivot, a pivotally mounted actuating lever coacting with said yoke to actuate said carrier as the lever is actuated, an actuating cam for said lever, a driving ratchet, a driven member operatively connected to said valve and lever actuating cams and provided with a pawl coacting with said driving ratchet, a trip member for said pawl operatively associated with said scale beam for releasing the pawl when the scale beam is in its initial position, a pair of stops on said carrier, and a pair of stop members pivotally mounted in opposed relation on said scale frame to coact with said stops on said carrier for supporting said carrier in operative relation to said feed means, said stop members on said frame being provided with a relatively fixed support permitting the stops on said carrier to disengage on the downward movement of the carrier.

4. In a structure of the class described, the combination of a feed means including a valve, a cam for actuating said valve, a weighing mechanism including a scale beam, a scale frame carried by said scale beam, a carrier pivotally mounted on said frame for oscillating movement, spouts mounted on said carrier to be alternately brought into operative relation with said feed means, a yoke on said carrier having seats on opposite sides of the carrier pivot, a pivotally mounted actuating lever coacting with said yoke to actuate said carrier as the lever is actuated, an actuating cam for said lever, a driving ratchet, a driven member operatively connected to said valve and lever actuating cams and provided with a pawl coacting with said driving ratchet, and a trip member for said pawl operatively associated with said scale beam for releasing the pawl when the scale beam is in its initial position.

5. In a structure of the class described, the combination of feed means including a valve, a cam for actuating said valve, a weighing mechanism including a scale beam, a scale frame suspended from said scale beam, links pivotally connected at the lower end of said scale frame to support the same against side sway, a carrier pivotally mounted on said frame for oscillating movement, spouts mounted on said carrier to be alternately brought into operative relation to said feed means, said carrier being provided with a yoke having seats on opposite sides of the carrier pivot, an actuating lever coacting with said yoke to actuate said carrier as the lever is actuated and to hold it in its actuated position when the scale beam is in its initial position, said lever also acting to insure complete actuation of the mechanism on each stroke of the lever, an actuating cam for said lever, a driving ratchet, a driven member operatively connected with said valve and lever actuating cams and provided with a pawl coacting with said driving ratchet.

6. In a structure of the class described, the combination of feed means including a valve, a cam for actuating said valve, a weighing mechanism including a scale beam, a scale frame carried by said scale beam, a carrier pivotally mounted on said frame for oscillating movement, spouts mounted on said carrier to be alternately brought into operative relation to said feed means, said carrier being provided with a yoke having seats on opposite sides of the carrier pivot, an actuating lever coacting with said yoke to actuate said carrier as the lever is actuated, an actuating cam for said lever, a driving ratchet, a driven member opera-

tively connected with said valve and lever actuating cams and provided with a pawl coacting with said driving ratchet, a trip member for said pawl operatively associated with said scale beam, friction brake means for said driven member, and a positioning means for said driven member adapted to act after its said pawl has been disengaged from the driving ratchet.

7. In a structure of the class described, the combination of feed means including a valve, a cam for actuating said valve, a weighing mechanism including a scale beam, a scale frame carried by said scale beam, a carrier pivotally mounted on said frame for oscillating movement, spouts mounted on said carrier to be alternately brought into operative relation to said feed means, said carrier being provided with a yoke having seats on opposite sides of the carrier pivot, an actuating lever coacting with said yoke to actuate said carrier as the lever is actuated, an actuating cam for said lever, a driving ratchet, a driven member operatively connected with said valve and lever actuating cams and provided with a pawl coacting with said driving ratchet, and a trip member for said pawl operatively associated with said scale beam.

8. In a structure of the class described, the combination of feed means, a swinging mechanism including a scale beam, a scale frame carried by said scale beam, a carrier pivotally mounted on said frame for oscillating movement, spouts mounted on said carrier to be alternately brought into operative relation to said feed means, said carrier being provided with a yoke having seats on opposite sides of the carrier pivot, an actuating lever coacting with said yoke to actuate said carrier as the lever is actuated to hold it in its actuated position when the scale beam is in its initial position, said lever also acting to insure complete actuation of the mechanism on each stroke of the lever, and means for actuating said lever controlled by said weighing mechanism.

9. In a structure of the class described, the combination of feed means, a weighing mechanism including a scale beam, a scale frame carried by said scale beam, a carrier pivotally mounted on said frame for oscillating movement, spouts mounted on said carrier to be alternately brought into operative relation to said feed means, said carrier being provided with a yoke having seats on opposite sides of the carrier pivot, an actuating lever coacting with said yoke to actuate said carrier as the lever is actuated, and means for actuating said lever controlled by said weighing mechanism.

10. In a structure of the class described, the combination of a feed means including a valve, a weighing mechanism including a scale beam, a scale frame carried by said scale beam, a carrier mounted on said frame for oscillating movement, spouts mounted on said carrier to be alternately brought into operative relation to said feed means, means for oscillating said carrier and actuating said valve including a driven member, a driving member operatively associated with said driven member, and driving connections for said driving member to said driven member controlled by said scale beam.

11. In a structure of the class described, the combination of a feed means including a valve, a weighing mechanism including a scale beam, a scale frame suspended from said scale beam, a carrier mounted on said frame for oscillating movement, spouts mounted on said carrier to be alternately brought into operative relation to said feed means, and means for oscillating said carrier and actuating said valve operatively associated with said scale beam.

12. In a structure of the class described, the combination of a feed means, a weighing mechanism including a scale beam, a scale frame carried by said scale beam, a carrier mounted on said frame for oscillating movement, spouts mounted on said carrier to be alternately brought into operative relation to said feed means, and means for oscillating said carrier operatively associated with the weighing mechanism to be actuated upon the actuation of said weighing mechanism.

13. In a structure of the class described, the combination of feed means including a valve, a cam for actuating said valve, a weighing mechanism including a scale beam, a scale frame carried by said scale beam, a carrier adjustably mounted on said frame, spouts mounted on said carrier to be alternately brought into operative relation to said feed means, means for actuating said valve including a driven member, a driving member operatively associated therewith, and driving connections for said driving member to said driven member controlled by said weighing mechanism.

14. In a structure of the class described, the combination of a feed means including a valve, a weighing mechanism including a scale beam, a scale frame carried by said scale beam, a carrier adjustably mounted on said frame, spouts mounted on said carrier to be alternately brought into operative relation to said feed means, and means for actuating said valve operatively associated with said weighing mechanism.

15. In a structure of the class described, the combination of feed means, a weighing mechanism including a scale beam, a scale frame carried by said scale beam, a spout carrier provided with a plurality of spouts adjustably mounted on said frame, a feed control means, and a spout carrier actuating means, said feed control means and carrier actuating means including a driving means

operatively associated with said weighing mechanism to be actuated upon the actuation of said weighing mechanism.

16. In a structure of the class described, the combination of feed means, a weighing mechanism including a scale beam, a scale frame carried by said scale beam, a spout carrier provided with a plurality of spouts adjustably mounted on said frame, and a spout carrier actuating means operatively associated with said weighing mechanism to be actuated upon the actuation of said weighing mechanism.

17. In a structure of the class described, the combination of feed means, a weighing mechanism including a scale beam, a scale frame carried by said scale beam, a spout carrier provided with a plurality of spouts adjustably mounted on said frame, a feed control means, and a spout carrier actuating means operatively associated with said weighing mechanism to be actuated upon the actuation of said weighing mechanism.

18. In a structure of the class described, the combination of feed means, a weighing mechanism comprising a scale beam, a scale frame suspended from said scale beam, means for supporting the lower end of said scale frame against swaying movement, a delivery member adjustably mounted on said frame and provided with a plurality of spouts adapted to be successively brought into operative relation with said feed means, and means for automatically adjusting said delivery member on said frame operatively associated with said weighing mechanism whereby the delivery member is automatically actuated upon the actuation of the weighing mechanism.

19. In a structure of the class described, the combination of feed means, a weighing mechanism comprising a scale beam, a scale frame carried by said scale beam, a delivery member adjustably mounted on said frame and provided with a plurality of spouts adapted to be successively brought into operative relation with said feed means, and means for automatically adjusting said delivery member on said frame operatively associated with said weighing mechanism whereby the delivery member is automatically actuated upon the actuation of the weighing mechanism.

20. In a structure of the class described, the combination of feed means, a weighing mechanism, a spout carrier carried by said weighing mechanism, a spout pivotally mounted on said carrier, a spring actuated latch pivotally mounted on said spout, a coacting keeper on said carrier, and a relatively fixed trip member adapted to release said latch on the downward movement of the carrier.

21. In a structure of the class described, the combination of feed means, a weighing mechanism, a pivotally mounted spout carrier on said weighing mechanism, spouts pivotally mounted on said carrier, spring actuated latches pivotally mounted on said spouts, coacting keepers on said carrier, and a relatively fixed trip member adapted to release said latches on the downward movement of the carrier.

22. In a structure of the class described, the combination of a feed means, a weighing mechanism, a spout carrier mounted on said weighing mechanism, a spout pivotally mounted on said carrier, means for holding said spout in erected position adapted to be disengaged on the downward movement of the carrier, said spout having an overhanging arm, a bag holder coacting with said spout, a supporting link pivotally connected to said bag holder and to said spout carrier, and a second supporting link pivotally connected to said arm on said spout and to said bag holder.

In witness whereof I have hereunto set my hand.

LEWIS D. NELSON.