Sept. 27, 1960 J. H. HILL 2,953,912

METHOD AND MECHANISM FOR KNITTING PILE FABRICS

Filed April 2, 1957 2 Sheets-Sheet 1

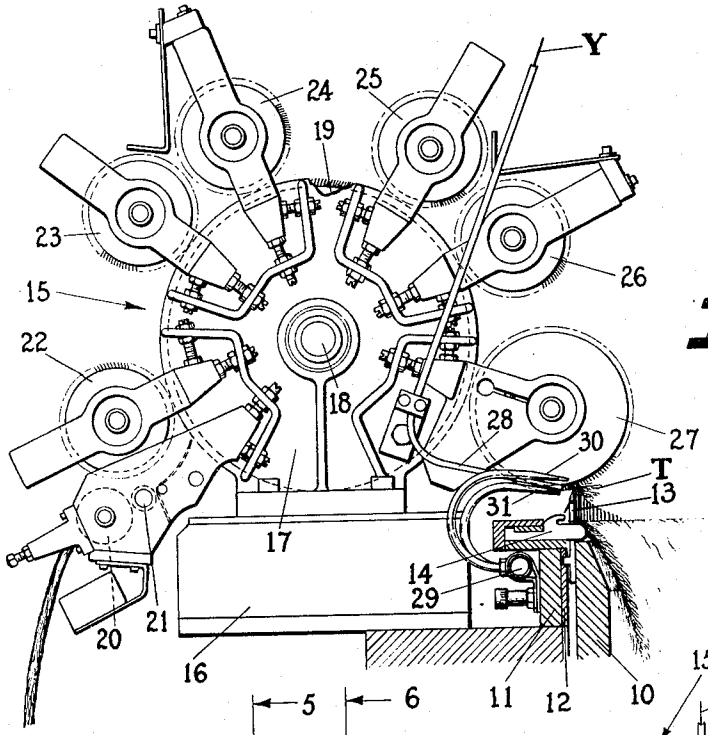

FIG. 1

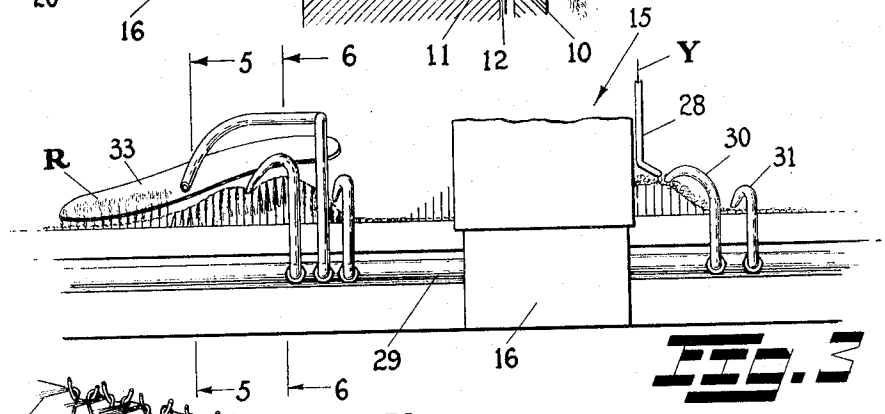

FIG. 3

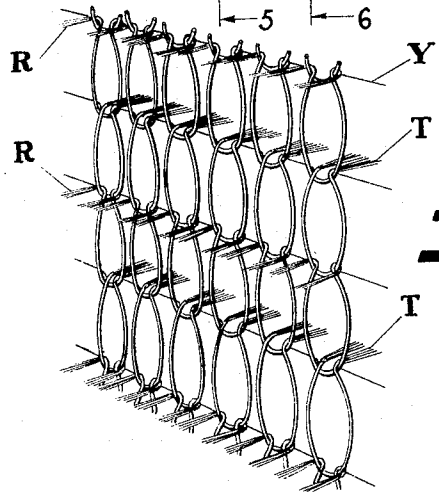

FIG. 2

INVENTOR.
JOHN H. HILL

BY Rodney C. Sautter

ATTORNEY

Sept. 27, 1960 J. H. HILL 2,953,912

METHOD AND MECHANISM FOR KNITTING PILE FABRICS

Filed April 2, 1957 2 Sheets-Sheet 2

Fig. 4

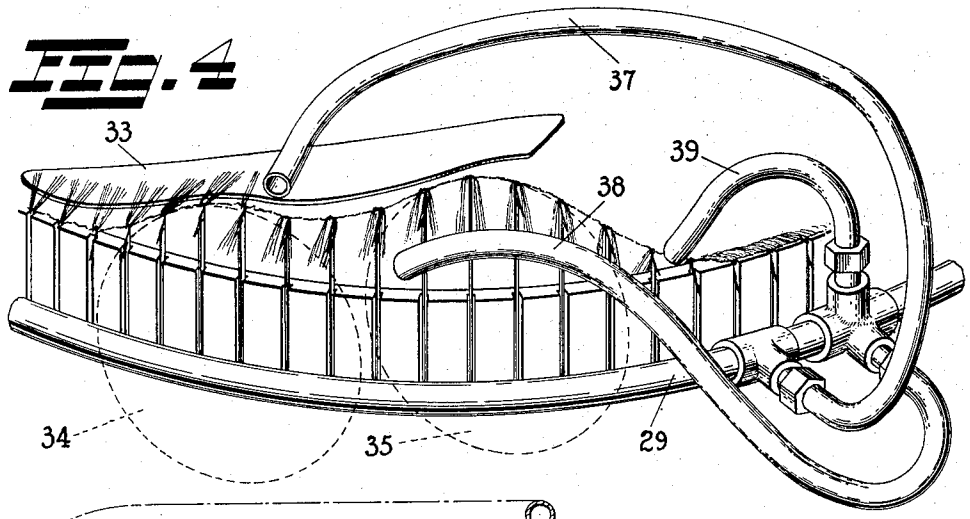

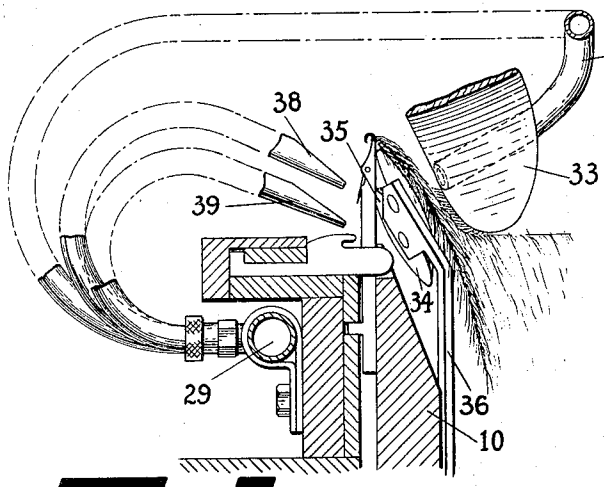

Fig. 6

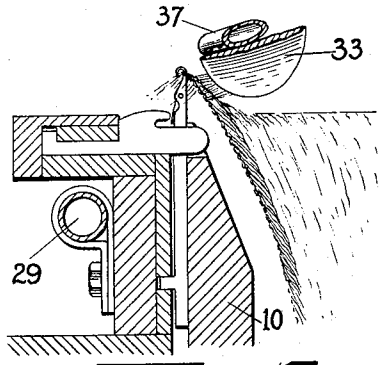

Fig. 5

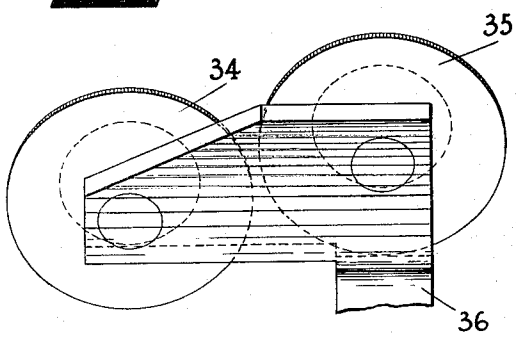

Fig. 7

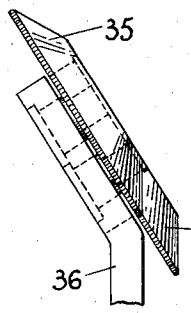

Fig. 8

INVENTOR.
JOHN H. HILL

BY Rodney C. Southworth

ATTORNEY

United States Patent Office 2,953,912 Patented Sept. 27, 1960

2,953,912

METHOD AND MECHANISM FOR KNITTING PILE FABRICS

John H. Hill, Wayne, Pa., assignor to Wildman Jacquard Co., Norristown, Pa., a corporation of Pennsylvania

Filed Apr. 2, 1957, Ser. No. 650,167

8 Claims. (Cl. 66—9)

This invention relates to improvements in a method and mechanism for knitting so-called high pile fabrics, more particularly, such fabrics having pile at both faces.

It is a general object of the invention to devise a novel method for knitting high pile fabrics in which the pile shall stand out at both faces of the fabric and to devise a novel mechanism for the knitting of such fabrics.

A more specific object is that of devising a simple and effective means to knit such fabrics in which the quantity of pile to be formed at either side may be controlled accurately and in which the uniformity of the pile shall be maintained at a prescribed density at either side.

A further object is that of devising a method and means by which pile fibers shall be selectively caused to appear wholly at one side of the fabric or the other, that is, so that fibers at any particular loop shall be evident in the fabric or extend at one side only of that fabric.

Other objects will become apparent from the following more detailed disclosure.

High pile fabrics, those knitted by incorporating a more or less accurately metered mass of parallelized fibers in each, or at least in predetermined groups of the loops have up to now, been knitted with the pile all at one side so far as commercial practice is concerned. It is true that two faced fabrics have been suggested, for example U.S. Patents 2,255,078 and 2,712,225 deal with such, but these have apparently not led to anything of a commercial nature.

According to the method and machine of the prior art, needles take fibers from the doffer roll of a card as employed with this type of machine with each mass of fibers, hereinafter called a tuft, tending to come to one side (the back) of a jersey knit base fabric. Then, some of each tuft is blown by an air stream or streams or affected by other means so that prior to the stitch being cast off and locked in place by the drawing of the succeeding loop it will force some of those fibers through the needles to the opposite side (the face) of the fabric. Obviously, there is little control of the amount of pile which may eventually appear at one side or the other and uniformity as to the appearance and density are in no way very predictable.

According to the instant invention, these objectionable characteristics associated with the prior art are avoided and complete control of the amount of pile to be brought to either side of the fabric as well as a maximum of uniformity are made possible. The method involves use of a multifeed knitter at certain feeds of which fibers are taken by needles in such a way as to cause their tufts to take a normal position at the back of the fabric while at other feeds or knitting stations the tufts are caused to appear at the front face. These reversals as to disposal of the pile are preferably arranged to alternate, first one at the back and the next at the front and so on, but, of course, there may be a wide variation as to procedure and, in fact, a change from one to the other loop (normal or reversed) may be caused to occur periodically in any predetermined fashion. The mechanism involves a jersey

fabric knitter with a plurality of fiber delivering cards as in U.S. Patent 1,114,414 with certain feeding and knitting stations set up to have its tufts controlled as by an air system to be extended inwardly of the knitted tube or to the back of the fabric and other, e.g., intermediate stations provided with a special means hereinafter described in detail, which reverses the tufts to be extended first outwardly and then back toward the center, but below the fabric on the needles and between those needles so it will eventually be locked in place at the front of the cloth.

The invention will be described in greater detail by reference to one specific embodiment thereof as illustrated in the accompanying figures of drawing, wherein:

Fig. 1 is a section through part of a knitting machine according to the invention.

Fig. 2 is a perspective of a section of a fabric having pile extending toward each face.

Fig. 3 is an elevation of a knitting machine showing certain air and other control means by which the pile is controlled.

Fig. 4 is an enlarged perspective view of an air system at one feed at which the pile tufts are reversed to appear at the front face of the fabric.

Fig. 5 is a section taken at line 5—5, Fig. 3.

Fig. 6 is a section taken at line 6—6, Fig. 4.

Fig. 7 is a detail view of certain fabric elevating means.

Fig. 8 is an end view of that part of the mechanism shown in Fig. 7.

Now referring to Fig. 1, a single feeding station of a knitting machine is shown including a needle cylinder **10**, a cam cylinder **11** having the usual cams **12**, needles **13**, sinkers **14** and a sinker head and cap of conventional type. Here this knitter is one in which the cams are stationary while the needle cylinder and sinker head rotate, but, of course, the opposite arrangement may be used.

A carding unit generally indicated by numeral **15** is mounted on a supporting bracket **16** and comprises a central flanged hub **17** at the center axis **18** of which a card cylinder **19** is rotatably supported and driven. About this there are mounted radially a number of cooperating units the purposes of which will be explained presently.

A mass of fibers of any desired material, for example, animal, vegetable or synthetic, either natural or of cut staple lengths is introduced in the form of sliver between feed rolls **20** and **21** and fed to the card cylinder and a breaker **22**. Fibers are distributed and somewhat parallelized upon the card clothing and are carried up to a pair of rolls including a stripper **23** and a worker **24** at which the fibers are further rearranged to develop uniformity of density and other desirable characteristics of the fleece.

The card advances and the process is continued through a second stripper **25** and a worker **26** whereupon the fibers are doffed by roll **27** by which they are presented in such manner that hooks of needles **13** may, when raised for the purpose, enter the teeth of the doffer and take a quantity of fiber. The fibers taken by a hook are herein referred to as a tuft and are of such a length as to be drawn with a loop of base fabric yarn taken later and still project from the fabric surface sufficiently to form pile of a length to be sheared and/or otherwise treated to leave a uniformly distributed pile of desired height. Since these fabrics usually are finished with a pile length well in excess of that obtained by napping or by cutting pile or Terry loops, they are referred to as High Pile fabrics.

The card cylinder and all other elements cooperating therewith are positively driven at their proper speeds by gearing, chains and sprockets at the opposite side of the unit in a manner well known to those skilled in this art so these parts need not be illustrated described here.

In Fig. 1 the needle 13 has just taken a tuft T and will shortly thereafter take the knitting yarn Y which is continuously fed through tube 28. As shown in Fig. 3 also, the needles are drawn down in a knitting wave after taking both the fibers and yarn and as that process of drawing stitches goes on, the fibers or tufts are so influenced that they are all forced toward the inside of the cylinder, that is, toward the back of the fabric. Here such means comprises two jets or streams of air directed toward the fibers from above and outside the needle circle. This air is supplied under suitable pressure through a ring-like tube 29 and tubes and nozzles 30 and 31. These air streams prevent any fibers from getting into a position to appear at the front of the fabric.

That part of the mechanism described to this point relates to those feeding and knitting stations at which the pile is formed at the back of the fabric. Now referring to Figs. 3–8, the initial steps involved in getting the pile at the front of the fabric will be described.

Needles are raised as in Fig. 1 to take the staple and along with the body yarn taken immediately after, are drawn down to knit, but the tufts R, Figs. 3 and 4, are maintained in a standing or isolated relationship by a plate 33. The next step is that of raising the fabric along with the needles and that is accomplished according to this preferred form of the invention by freely rotatable disks 34 and 35. These are mounted in a bracket 36, the disk 35 being slightly higher than disk 34. This elevation of the fabric may be utilized to raise needles also or cams may be employed for the purpose. However, the raised fabric makes possible the reversing of the position of the tufts which are, of course, locked into the fabric by this time, so that they may project toward the opposite side from which tufts T extend.

The ring 29 has coupled to it three tubes and nozzles the purpose of which is to force these tufts R outwardly, down and between needles and then inwardly so that they will eventually be locked below the fabric. Tube 37 with its nozzle end above plate 33 emits air to blow the tufts outwardly and down as in Figs. 3 and 4 whereupon a stream of air from tube 38 turns the fibers back inwardly between needles and the continued action by the air from the third tube 39 maintains their position until the fabric and needles have descended so that the fibers may not escape. Plate 33 prevents these air streams from affecting other than the tufts being formed for this particular course. Web holders have not been shown in Figs. 3 and 4, but, of course, they would be used. However, the illustration is much simpler without them and their absence does not affect the principles involved.

The raising of needles at the next feeding point is accomplished with the fabric held down by the web holders, takeup, etc., and thus the reversed pile may not become dislodged to return to the inside of the fabric. It should be understood that the material tendency of the pile fibers is to extend to the back of the fabric and that when they are brought to the front, a reversing of their natural tendency is effected. An inspection of Fig. 2 in which the fabric is shown with loops extremely large and loosely knitted will serve to illustrate this point. The yarn Y is jersey knitted to form a base fabric and at the first course at the top (knitting down) the tufts R are turned back between needles so as to project through sinker loops toward the fabric front. Intermediate courses have their tufts T extended toward the fabric back.

The concentration of the pile may be varied by knitting the base more or less tightly and by feeding more or a smaller quantity of fibers to the needles. The length of fibers may be chosen to suit the intended use to which the product is to be put and, of course, various finishing steps may be later effected to suit the product to some desired end.

While it is preferred that every other feed be used to obtain pile at the back and intermediate feeds for the reversed or front pile, there may be situations in which other arrangements are employed, for example, a two to one scheme. At times the pile length and/or density at one side may be different from that at the other. Of course, the cards are then supplied with the proper sliver and the length and quantity involved governed as required.

The reversed tufts R actually take up more material at the loop and so longer staple may be fed. If considerable shearing is to be done later, however, that may not be needed.

Different material may be supplied to come to the front as compared to that at the back and other variations will become evident while still falling within the general principles of the original inventive concept.

While one embodiment of the invention has been disclosed, it is to be understood that the inventive concept may be carried out in a number of ways. This invention is, therefore, not to be limited to the precise details described, but is intended to embrace all variations and modifications thereof falling within the spirit of the invention and the scope of the claims.

I claim:

1. A method of knitting a double faced, high pile fabric on a circular knitting machine which includes the steps of knitting a base fabric and at certain spaced courses thereof knitting in tufts of fibers and applying thereto air pressure to cause substantially all the fibers of each said tuft to project toward the back of the fabric, and at other courses of the fabric knitting in tufts of fibers and applying thereto air pressure to reverse their direction as compared to the direction in which the first mentioned fibers project, the air pressure at said other courses being applied first outwardly of the needle cylinder, and then downwardly and inwardly toward the center of the needle cylinder, thereby to cause substantially all the fibers in each tuft knitted in at said other courses to project toward the front of the fabric.

2. In the method of claim 1 the step of elevating the fabric during the knitting of courses in which the tufts are reversed in direction.

3. A method as defined in claim 1 wherein the quantity of fibers to be incorporated into said spaced and other courses is differently governed by varying the rate of feed of fibers thereby to regulate the density of pile by which opposite faces of the fabric are characterized.

4. In a knitting machine of the type described, knitting instrumentalities and cooperating means for knitting a multifeed jersey fabric at a plurality of stations, fiber carding and doffer means for parallelizing and delivering fibers to hooks of needles at each knitting station, means acting subsequently to one said station for influencing tufts of fibers taken by needles knitting thereat so that those fibers taken at that station shall project entirely toward the back of said fabric, and other means at a following station for so acting upon those tufts of fibers taken by needles knitting at said following station as to reverse the direction in which said latter fibers tend to project and cause them to project outwardly of the needle circle then downwardly and inwardly between needles and thus entirely toward the front of the fabric.

5. In a knitting machine of the type described, knitting instrumentalities and cooperating means for knitting a multifeed jersey fabric at a plurality of stations, fiber carding and doffer means for parallelizing and delivering fibers to hooks of needles at each knitting station, means comprising an air stream delivery system for directing air against tufts of fibers taken by needles knitting at one station so that those fibers taken at said one station shall project entirely toward the back of the fabric, and other means comprising a second air stream delivery system acting subsequently to a following station for so affecting fibers by air emitted from said second system as to reverse the direction in which said latter fibers tend to project and cause them to be projected outwardly of the needle circle then downwardly and inwardly between

needles and thus entirely toward the front of the knitted fabric.

6. Mechanism as defined in claim 5, wherein means is provided for elevating the fabric at that point at which the fibers at certain courses are reversed and passed between knitting instrumentalities.

7. Mechanism as defined in claim 5 wherein at those points at which said air streams for reversing said latter fibers at certain courses are effective, rotatable disks are positioned to elevate the fabric along with instrumentalities to permit the fibers to be reversed to pass to the front fabric face.

8. Mechanism as defined in claim 5 wherein a plate is positioned above the fabric and extends over that part of the knitting instrumentalities at which fibers are reversed to pass to the front of the fabric to maintain the fibers just taken for the course being knitted separated from fibers just previously locked into the fabric.

References Cited in the file of this patent

UNITED STATES PATENTS

2,280,535	Moore	Apr. 21, 1942
2,457,104	Moore	Dec. 21, 1948
2,712,225	Moore	July 5, 1955
2,725,735	Moore	Dec. 6, 1955
2,779,176	Moore	Jan. 29, 1957

FOREIGN PATENTS

370,736	Germany	Mar. 6, 1923