Oct. 12, 1965 E. J. McQUILLEN 3,211,396

ONE-WAY REEL WITH VISCOUS DRAG

Filed Nov. 29, 1963

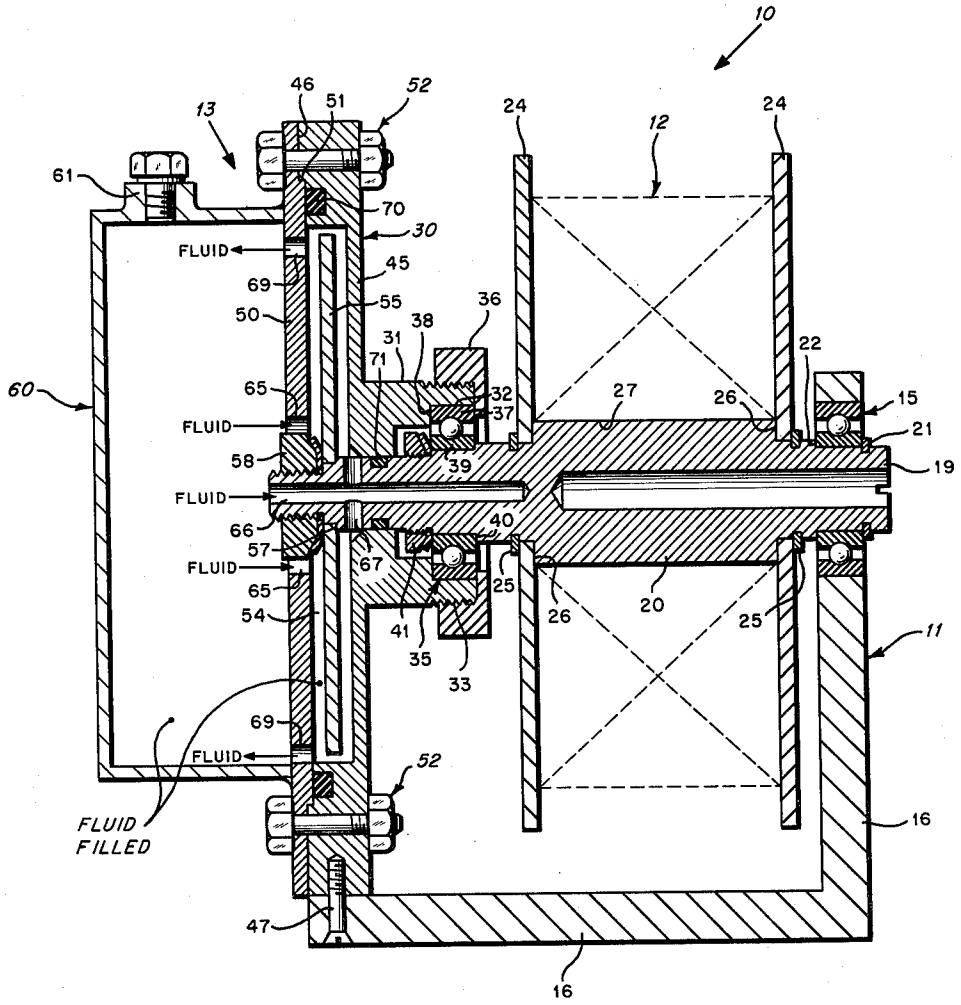

INVENTOR.
EDWARD J. McQUILLEN
BY
ATTORNEYS

United States Patent Office

3,211,396

Patented Oct. 12, 1965

3,211,396

ONE-WAY REEL WITH VISCOUS DRAG

Edward J. McQuillen, Huntingdon Valley, Pa., assignor to the United States of America as represented by the Secretary of the Navy

Filed Nov. 29, 1963, Ser. No. 327,158
5 Claims. (Cl. 242—156.2)
(Granted under Title 35, U.S. Code (1952), sec. 266)

The invention described herein may be manufactured and used by or for the Government of the United States of America for governmental purposes without the payment of any royalties thereon or therefor.

The present invention relates to a reel assembly and more particular to an assembly wherein reel-out is controlled by viscous drag.

In the field of air-launched towed targetry, the development of an expendable and inexpensive target established a requirement for the subsequent development of a compact, inexpensive one-way reel.

The use of conventional reels obtained a high initial payout velocity but impact failure of the towline occurred when the tow cable was fully payed out. In order to insure a low payout speed, for example 25 feet per second, at the termination of the towline payout various braking systems have been suggested. These suggestions include mechanical or hydraulically applied brakes and centrifugal brakes each of which result in a complex, expensive assembly which additionally requires standby manual controls.

In contradistinction to the above systems the general purpose of this invention is to provide a viscous braking system which permits minimum reel-out time of the tow target and insures a slow payout velocity at the termination of the payout which thereby precludes the failure of the tow cable prior to the target presentation. In addition, the present invention obviates the deleterious condition arising from the change in fluid viscosity due to the heat generated during braking by providing a novel self-circulating system.

An object of the present invention is the provision of a simple, compact, self-contained one-way reel assembly.

Another object is to provide a self-contained reel and brake assembly which has high initial payout velocity and low terminal payout velocity.

A further object of the invention is the provision of a reel assembly which require no external controls for the operation thereof and which when utilized in the field of towed targetry may be adjusted prior to the use thereof to accommodate various initial payout speeds and terminal payout velocities and varying size targets so that rupture of the tow cable is precluded at the termination of the payout of the tow line.

Still another object is to provide a one-way reel assembly and viscous braking mechanism therefor wherein the viscosity of the fluid utilized within the system is maintained over the wide temperature ranges which arise.

Other objects and features of the invention will become apparent to those skilled in the art as the disclosure is made in the following description of a preferred embodiment of the invention as illustrated in the accompanying sheet of drawing in which the figure shows a view in cross section of a preferred embodiment of the invention.

Referring now to the drawing, wherein like reference characters designate like or corresponding parts, there is shown in the illustrated embodiment a reel assembly generally noted at **10** consisting basically of a support unit **11**, a reel unit **12** and a viscous braking assembly or mechanism **13**. A bearing assembly **15** secured to base plate **16** of the support unit **11** rotatably secures one end **19** of shaft **20** thereto.

A pair of laterally spaced, parallel plates **24**, which form the side plates of the reel unit **12** are coaxially disposed about the shaft **20** and are rigidly held in position by reason of the cooperation of fastening rings **25** and the shoulder **26** formed on the periphery of the shaft **20**. The surface **27** of the shaft **20** between parallel plates **24** provides the surface about which the tow line cable is wrapped. It should be noted at this point that the end of the tow line cable, not shown, is looped loosely and secured about the surface **27** so as to provide a sliding arrangement between the surface **27** and the end of the tow line cable.

A hub assembly generally noted at **30** comprising a portion of the viscous brake mechanism **13** includes a cylindrical portion **31** which is internally grooved at **32** and externally threaded at **33** for receiving bearing assembly **35**. The outer race **37** of the bearing assembly **35** is held in position by reason of its abutment with the shoulder portion **38** of the internally grooved portion **32** together with the engagement with a restraining nut **36**. The inner race **39** is held in its fixed position by reason of the engagement thereof with a shoulder portion **40** formed on the shaft **20** and the engagement of a washer-fastening nut arrangement **41** threaded on another portion of the shaft **20**. Shaft **20** is thereby precluded from axial movement relative to the support unit **11** by reason of cooperation of fastening ring **21** and shoulder **22** of shaft **20**, while bearing assembly **15** is free to slide axially for slight differences in manufacturing tolerances.

The hub assembly **30** further includes circular flange **45** terminating in laterally offset edge portions **46**. The hub assembly **30** is fixed to the base plate **16** of the support unit **11** by fastening means **47** which engages the base plate and the laterally offset edge portion **46**.

A washer shaped plate **50** conforming to the outer confines of the hub assembly **30** is secured to the hub assembly **30** by reason of the mutual notched arrangement **51** and the fastening means **52**. The hub assembly **30** together with the washer shaped plate **50** provides a housing or fluid chamber indicated at **54** within which rotates a circular disk **55** which in turn is removably and fixedly secured to the rotating shaft **20**. Circular disk **55** is secured to shaft **20** by reason of the abutment of one side of the disk on a shoulder portion **57** formed about the periphery of the shaft **20** together with the washer nut arrangement **58** which threadably engages the shaft at the terminal portion thereof and abuts the other side of the circular disk **55** and urges the same into its abutting condition with the shoulder **57**.

Reservoir assembly **60** including inlet **61** is welded or otherwise secured to the plate **50** and is substantially filled with a viscous fluid such as silicone oil or the like of predetermined viscosity. In order to permit the fluid to gain entrance to the chamber **54**, ingress ports **65** are provided in the washer shaped plate **50** and additionally coaxial slot **66** and cross ports **67** are formed at the end of the shaft member, the cross ports being arranged to communicate with the interior of the housing **54**. To permit circulation and cooling of the fluid, egress openings **69** are additionally provided in the plate **50** at the outer extremity of the housing **54**.

The shear area of circular disk **55**, the spacing of the disk **55** from chamber sidewalls, and the viscosity of the fluid are calculated such that the viscous drag on the circular flat disk rotating within the housing will provide a predetermined slow terminal payout velocity of, for example, 25 feet per second in order to avoid high impact. The location of the ingress and egress ports and the quantity of oil within the reservoir are additionally calculated to provide sufficient circulation and attendant absorption of the heat generated when the reel is in operation.

Obviously many modifications and variations of the present invention are possible in the light of the above teachings. It is therefore to be understood that within the scope of the appended claims, the invention may be practiced otherwise than as specifically described.

What is claimed is:

1. In a one-way reel for use with expendable tow targets the combination comprising:
support means having a bearing assembly contained therein,
a shaft member having one end thereof secured for rotation within said bearing assembly,
a pair of spaced peripheral shoulders on said shaft member and a pair of circular side plates abutting and secured to said shoulders and about said shaft member forming a reel,
the other end of said shaft member also rotatably secured within said support and having a coaxial groove formed therein and radial ports communicating with said coaxial groove,
a circular disk member rigidly secured to said shaft member for rotation therewith,
a fluid chamber substantially enclosing said circular disk member and including ingress and egress ports communicating exteriorly of said chamber,
a reservoir secured to said chamber and filled with a viscous fluid,
said egress and ingress ports communicating with said reservoir,
and said coaxial groove and said radial ports having fluid communication with said reservoir and said chamber respectively.

2. In a one-way reel for use with expendable tow targets the combination comprising:
support means,
a reel including a hub journaled for rotation within said support means,
said hub having at one end thereof a coaxial groove formed therein and radial ports communicating with said coaxial groove,
a circular disk member rigidly secured to said one end of said hub for rotation therewith,
a fluid chamber substantially enclosing said circular disk member and including ingress and egress ports communicating exteriorly of said chamber,
a reservoir secured to said chamber and filled with a viscous fluid,
said egress and ingress ports communicating with said reservoir,
and said coaxial groove and said radial ports having fluid communication with said reservoir and said chamber respectively.

3. In a one-way reel for use with expendable tow targets the combination comprising:
a rotatable hub member subject to variations in applied torque,
said hub having at one end thereof a coaxial groove formed therein and radial ports communicating with said coaxial groove,
a circular disk member rigidly secured to said one end of said hub for rotation therewith,
a fluid chamber substantially enclosing said circular disk member and including ingress and egress ports communicating exteriorly of said chamber,
a reservoir secured to said chamber and filled with a viscous fluid,
said egress and ingress ports communicating with said reservoir,

and said coaxial groove and said radial ports having fluid communication with said reservoir and said chamber respectively.

4. A viscous braking mechanism for a one-way tow line reel comprising:
a rotatable shaft member formed as a part of the reel and having one end extending beyond the confines thereof,
said one end of said shaft having a coaxial groove formed therein and a plurality of radial ports having fluid communication with said coaxial groove,
a circular disk member of predetermined surface area rigidly secured to said one end of said shaft for rotation therewith,
a fluid chamber substantially enclosing said circular disk member and providing a predetermined area between said disk member and said enclosing chamber,
a reservoir secured to the outside of said chamber and filled with a viscous fluid,
said chamber further including centrally located ingress ports having fluid communication with said reservoir and circumferentially located egress ports having fluid communication with said reservoir,
said radial ports of said shaft having fluid communication with said chamber,
and said coaxial groove having fluid communication with said reservoir.

5. A self-contained tow line reel and viscous brake assembly for obtaining a predetermined terminal payout velocity comprising:
support means having a bearing assembly contained therein,
a shaft member having one end thereof secured for rotation within said bearing assembly,
a pair of spaced peripheral shoulders on said shaft member and a pair of circular side plates abutting and secured to said shoulders and about said shaft member forming a reel,
the other end of said shaft having a coaxial groove formed therein and a plurality of radial ports having fluid communication with said coaxial groove,
a circular disk member of predetermined surface area rigidly secured to said one end of said shaft for rotation therewith,
a fluid chamber substantially enclosing said circular disk member and providing a predetermined area between said disk member and said enclosing chamber,
a reservoir secured to the outside of said chamber and filled with a viscous fluid,
said chamber further including centrally located ingress ports having fluid communication with said reservoir and circumferentially located egress ports having fluid communication with said reservoir,
said radial ports of said shaft having fluid communication with said chamber,
and said coaxial groove having fluid communication with said reservoir.

References Cited by the Examiner

UNITED STATES PATENTS

1,467,523	9/23	Andlauer	242—100
1,992,911	2/35	De La Mater	188—90
2,607,548	8/52	Hollander	242—84.52
2,923,549	2/60	Hopper et al.	188—90 X

MERVIN STEIN, *Primary Examiner.*

STANLEY N. GILBREATH, *Examiner.*