(No Model.) 3 Sheets—Sheet 1.

# B. H. HECHT.

## WASHING MACHINE.

No. 456,145. Patented July 21, 1891.

Fig. I.

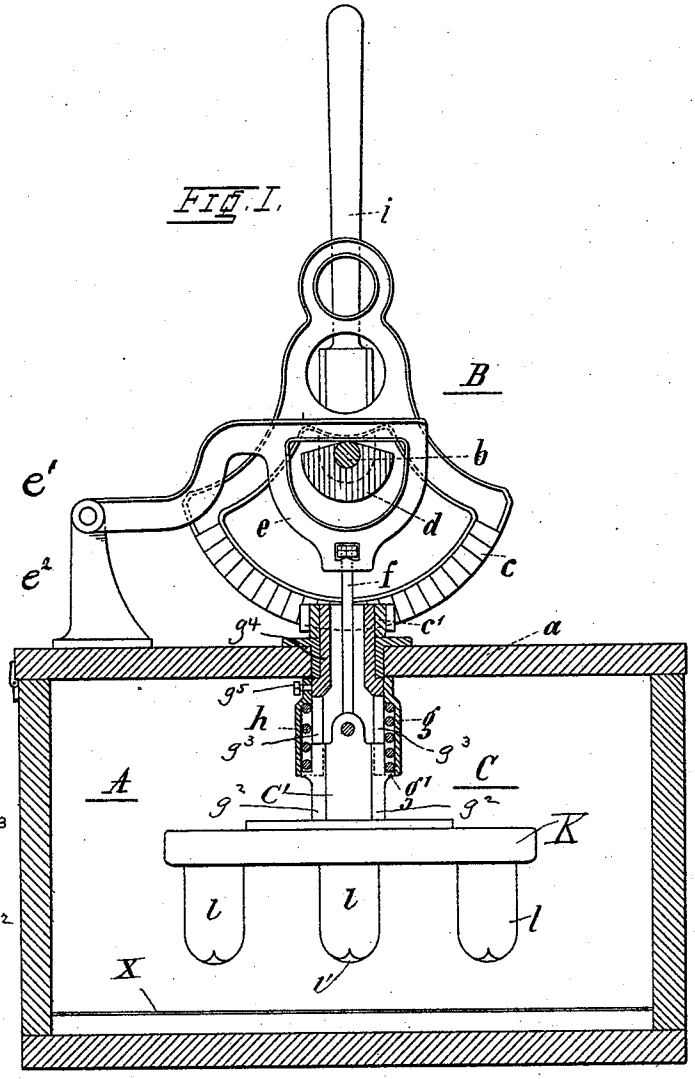


Fig. V.

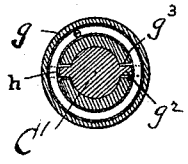


Fig. IV.

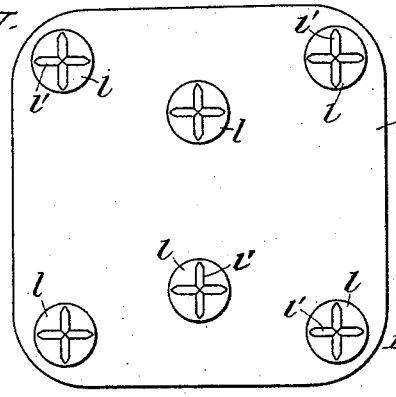


Witnesses:
Howard L. White

Inventor:
Bruno H. Hecht
By Richards & Q
Attorneys.

THE NORRIS PETERS CO., PHOTO-LITHO., WASHINGTON, D. C.

(No Model.) 3 Sheets—Sheet 2.

B. H. HECHT.

WASHING MACHINE.

No. 456,145. Patented July 21, 1891.

FIG. II.

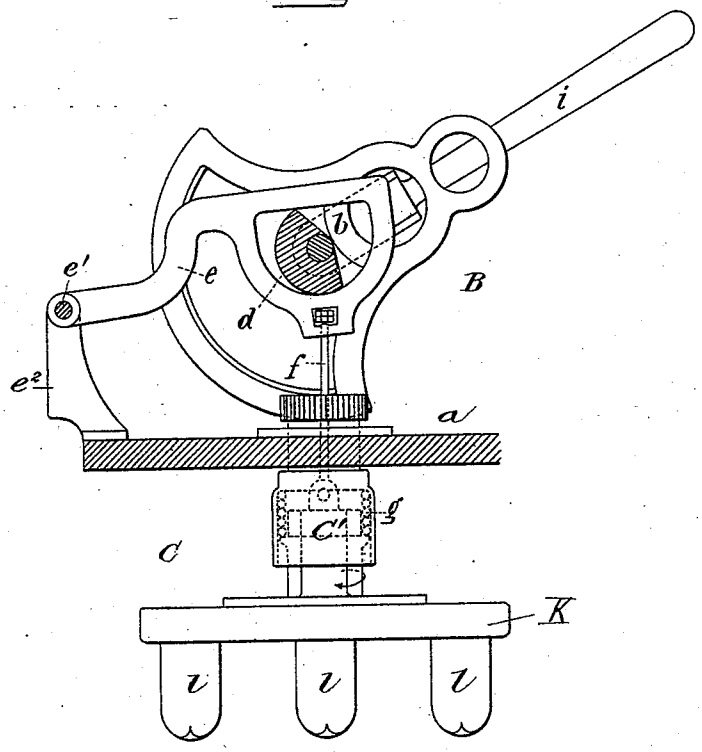


Witnesses:

H de Vos.

Howard L White

Inventor:

Bruno Hermann Hecht,

By Pidiaras & Co

Attorneys.

THE NORRIS PETERS CO., PHOTO-LITHO., WASHINGTON, D. C.

(No Model.) 3 Sheets—Sheet 3.

# B. H. HECHT.

## WASHING MACHINE.

No. 456,145. Patented July 21, 1891.

Fig. 3.

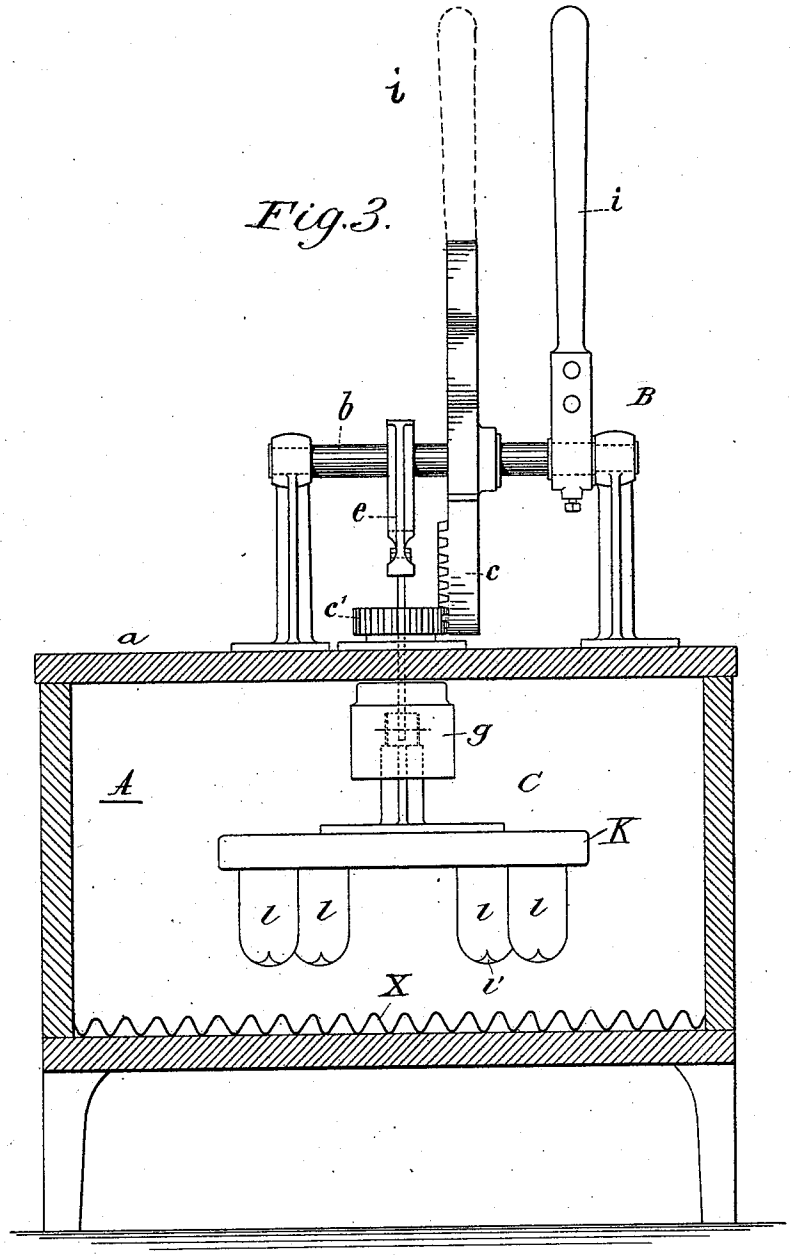


Witnesses:
Howard L White
Hdelbos

Inventor:
Bruno Hermann Hecht,
By Richards & Co
Attorneys.

THE NORRIS PETERS CO., PHOTO-LITHO., WASHINGTON, D. C.

# UNITED STATES PATENT OFFICE.

BRUNO HERMANN HECHT, OF MEERANE, GERMANY.

## WASHING-MACHINE.

SPECIFICATION forming part of Letters Patent No. 456,145, dated July 21, 1891.

Application filed September 23, 1889. Serial No. 324,773. (No model.) Patented in Belgium August 13, 1889, No. 87,354; in France August 13, 1889, No. 200,188; in England August 13, 1889, No. 12,761; in Switzerland August 21, 1889, No. 1,555, and in Austria-Hungary December 18, 1889, No. 35,788 and No. 5,906.

*To all whom it may concern:*

Be it known that I, BRUNO HERMANN HECHT, a subject of the King of Saxony, residing at Meerane, Saxony, German Empire, have invented new and useful Improvements in Washing-Machines, (for which I have obtained Letters Patent in Belgium August 13, 1889, No. 87,354; in France August 13, 1889, No. 200,188; in Austria-Hungary December 18, 1889, No. 35,788 and No. 5,906; in Great Britain August 13, 1889, No. 12,761, and in Switzerland August 21, 1889, No. 1,555,) of which the following is a full, clear, and exact description.

My improvements relate to washing-machines; and the object of my invention is to produce a machine that shall wash the clothes in as exact an imitation as possible of the manner in which clothes are ordinarily washed with the hands, and this result I accomplish by constructing my machine in such a manner that different portions of the goods which are to be cleaned are continually and successively seized, washed, and released by the machine until the whole of the fabrics shall have been uniformly and thoroughly washed.

In the annexed drawings, which form a part of this specification, Figures I and III show the new washing-machine in front and side view and partly in section in different working positions. Fig. II shows a front view of the operating mechanism and the rubbers separated from the other parts of the machine, and Fig. IV shows a bottom view of the washing-board with the rubbers provided with grooves. Fig. V is a sectional view on line 5 5 of Fig. 1.

As shown in the drawings, the washing-machine consists of a wooden box A, lined with a corrugated sheet-zinc washing-plate X, the upper operating mechanism B, and the lower washing mechanism C. The operating mechanism B is arranged on the hinged or removable cover *a* and is connected with the lower or washing mechanism C, which is freely suspended within the box by means of a rod *f* and oscillated in horizontal planes by toothed segment *c*, mounted on the driving-shaft *b*, and the cog-wheel *c'*, the latter being secured to the upper end of a sleeve $g^4$, which is mounted in a vertical bearing in the cover *a* and guides at its lower end the washing mechanism C. The raising or lowering of the lower mechanism C is effected by means of the cam *d*, arranged on the driving-shaft *b*, and the loop *e*, surrounding said cam and engaging therewith, and which is pivoted at *e'* to a standard $e^2$, arranged on the cover *a* so as to allow of an up-and-down motion, said loop *e* carrying also the rod *f*, to which the lower inner mechanism C is suspended. The lower end of the rod *f* is hooked into or otherwise connected with a post C', which is secured to the upper face of the plate K, and as the loop *e* is carried up and down by the cam *d* the rod *f* draws the entire lower mechanism C up and down with it, the post C' having one or more longitudinal ribs or feathers $g^3$ engaging with and sliding in slots $g^3$ in the lower part of the sleeve $g^4$. An outer sleeve *g* surrounds the lower part of the sleeve $g^4$, and is secured thereto by a set-screw $g^5$. A spiral spring *h* is arranged between the two sleeves and bears downwardly upon projections *g'*, that extend horizontally from the ribs or feathers $g^2$, to the end that the plate is constantly pushed downward by the action of the spiral spring *h*, arranged in said sleeve. The plate K, with the rubbers thereon, is carried by the said post C'.

The working of the machine is as follows: By moving to and fro the hand-lever *i*, arranged on the driving-shaft *b*, (or connected directly with or formed in one piece with the toothed segment *c*, as indicated in dotted lines in Fig. 3,) said driving-shaft *b* and toothed segment *c* and also the cam *d* are brought into a swinging motion. Consequently the plate K, with its rubbers *l*, is first horizontally rotated and then, while still rotating, raised and lowered by the action of the cam *d*. The raising of the plate K is effected after about one-third of a revolution of the lower or inner mechanism C. When the hand-lever is

pulled back, the cam *d* will allow the plate to be lowered again, while it is at the same time rotated in the opposite direction under the action of the toothed segment *c* and the cog-wheel *c'*.

The use of the machine is as follows: The cover of the box A is opened, and the box is filled a little over half-full with good warm soapsuds. The goods are then loosely arranged therein and the box is closed. Now the hand-lever *i* is moved to and fro, which causes the plate K alternately to rotate to the right and to the left hand side. For one-third of each revolution the plate will remain lowered, and at this point washes the clothes, the rubbers *l l* rubbing then against the plate K. Then it is raised and the goods seized by the rubbers are released. Thereupon it is lowered again, and the rubbers will again seize the goods at a different place. The same action is then repeated. The goods will not be injured by this process, as the spring *h*, which is arranged on the rim *g'* and inside of the boss *g*, only exercises a moderate pressure. To promote an efficient working of the rubbers and a thorough cleaning of the goods, I have provided the rubbers at their ends with grooves *l'*.

Having fully described my invention, what I claim as new, and desire to secure by Letters Patent, is—

1. In a washing-machine, the combination of a suitable receptacle, rubbing devices therein, an oscillatory loop and lever *e*, mounted above the receptacle upon pivot *e'* and connected with said rubbing devices, a spring acting to depress the latter, a gear-wheel *c'*, connected with the rubbing devices and adapted to rotate them, a gear *c*, engaging the wheel *c'*, a cam *d*, mounted within said loop, and means for actuating said cam and gear *c*, substantially as set forth.

2. In a suitable receptacle A, the combination, with the plate K, provided with the rubbers *l*, of the post C', the sleeve $g^4$, containing the same, the spring *h*, the outer sleeve *g*, the gear-wheel *c'* on the sleeve $g^4$, the loop and lever *e*, pivoted at *e'*, the rod *f*, connecting said loop and the post C', the cam *d*, the gear *c*, and means for actuating said cam and gear, substantially as set forth.

In witness whereof I have hereunto set my hand in presence of two witnesses.

BRUNO HERMANN HECHT.

Witnesses:
ALEN SCHOLZE,
FRANZ LANGNER.