Office de la Propriété Intellectuelle du Canada
Un organisme d'Industrie Canada

Canadian Intellectual Property Office
An agency of Industry Canada

CA 2078847 C 2002/01/22

(11)(21) 2 078 847

(12) BREVET CANADIEN
CANADIAN PATENT

(13) C

(22) Date de dépôt/Filing Date: 1992/11/13

(41) Mise à la disp. pub./Open to Public Insp.: 1993/05/14

(45) Date de délivrance/Issue Date: 2002/01/22

(30) Priorité/Priority: 1991/11/13 (P 41 37 349.9) DE

(51) Cl.Int.^{5}/Int.Cl.^{5} B31B 1/84

(72) Inventeurs/Inventors:
Simon, Helmut, DE;
Achelpohl, Fritz, DE

(73) Propriétaire/Owner:
Windmoller & Holscher, DE

(74) Agent: SHAPIRO, COHEN

(54) Titre : APPAREIL DESTINE SURTOUT A JOINDRE UNE BANDE OU UN BOUT DE TUBE A UNE FEUILLE EN MOUVEMENT OU A UNE PIECE A TRAILLER TRANSPORTEE

(54) Title: AN APPARATUS FOR THE APPLICATION OF PREFERABLY ADHESIVE COATED SLIPS OR PIECES OF TUBE TO A MOVING WEB OR TO WORKPIECES BEING CONVEYED

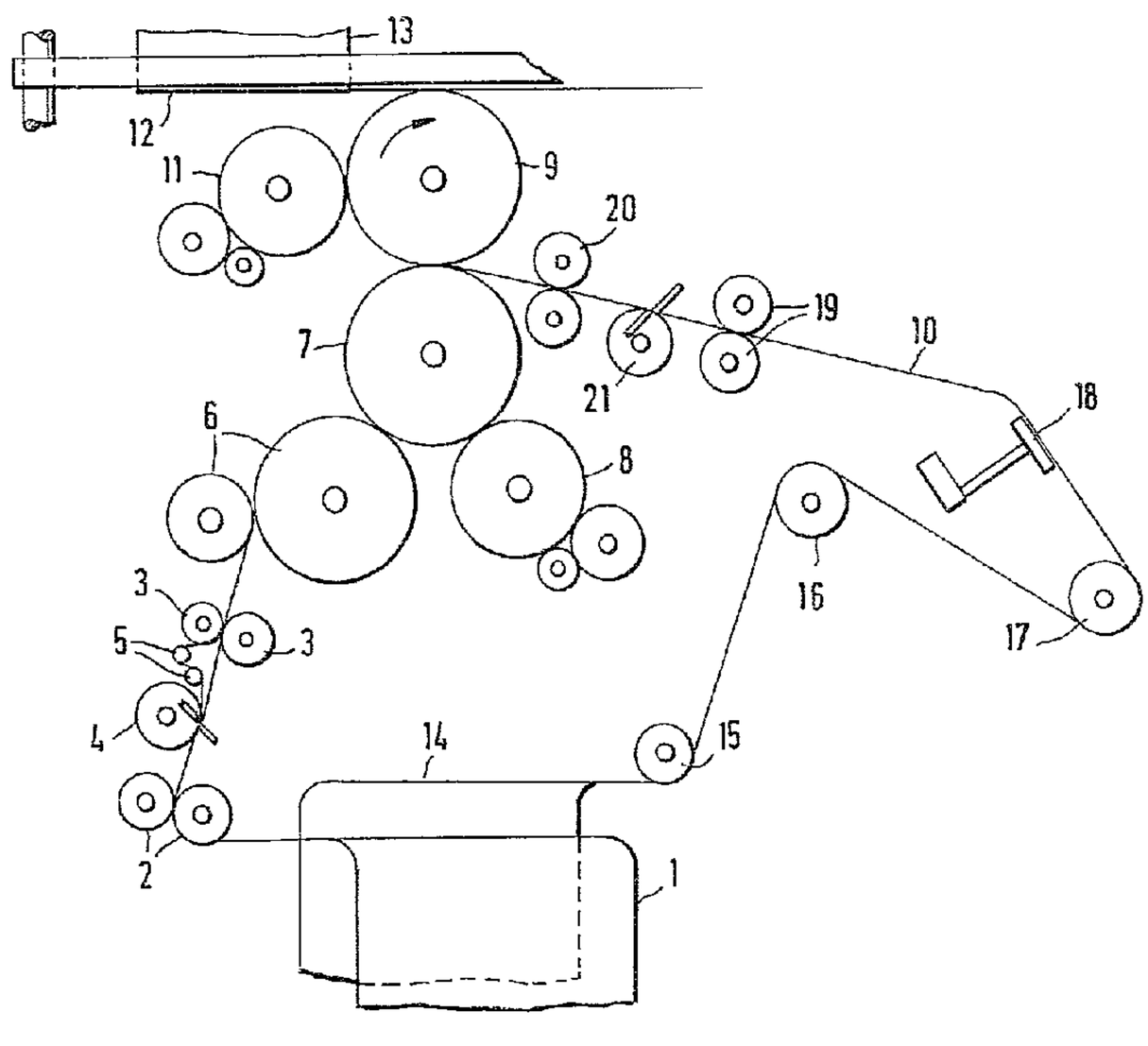

(57) Abrégé/Abstract:
An apparatus for the application of adhesive coated slips to a moving web or to workpieces being conveyed, and preferably to the drawn up and still open bottoms of bags, consists of pairs of feed rolls for a web of material and means for perforating and tearing off, or means for detaching, the slips from the web of material and of a transfer folding gripper cylinder for receiving and subsequent transfer of the slips or pieces of tube. In order to be able to apply additional slips between an applying folding gripper cylinder for the application of the slips and the transfer folding cylinder there is an intermediate cylinder, which with the applying folding cylinder defines a roll nip, into which slips run, which are torn off or otherwise detached along lines of perforations from a second web of material are inserted, and which transfers the slips or pieces of tube which are torn off or otherwise detached from the first and the second web of material in an at least partly overlapping condition to the web or, respectively, workpieces passing through the device.

2078847

AN APPARATUS FOR THE APPLICATION OF PREFERABLY ADHESIVE COATED SLIPS OR PIECES OF TUBE TO A MOVING WEB OR TO WORKPIECES BEING CONVEYED

ABSTRACT

An apparatus for the application of adhesive coated slips to a moving web or to workpieces being conveyed, and preferably to the drawn up and still open bottoms of bags, consists of pairs of feed rolls for a web of material and means for perforating and tearing off, or means for detaching, the slips from the web of material and of a transfer folding gripper cylinder for receiving and subsequent transfer of the slips or pieces of tube. In order to be able to apply additional slips between an applying folding gripper cylinder for the application of the slips and the transfer folding cylinder there is an intermediate cylinder, which with the applying folding cylinder defines a roll nip, into which slips run, which are torn off or otherwise detached along lines of perforations from a second web of material are inserted, and which transfers the slips or pieces of tube which are torn off or otherwise detached from the first and the second web of material in an at least partly overlapping condition to the web or, respectively, workpieces passing through the device.

2078847

AN APPARATUS FOR THE APPLICATION OF PREFERABLY ADHESIVE COATED SLIPS OR PIECES OF TUBE TO A MOVING WEB OR TO WORKPIECES BEING CONVEYED

The present invention relates to an apparatus for the application of preferably adhesive coated slips or pieces of tube to a moving web or to workpieces being conveyed, comprising pairs of feed rolls for a web of material and means for perforating and tearing off or means for detaching the slips or pieces of tube from the web of material, and a transfer folding gripper cylinder for receiving and then transferring the slips or pieces of tube. Typical workpieces are the drawn up and still open, unsealed, bottoms of bags.

If the slips are applied to the drawn up and still open bottoms of bags, then closing tabs, or reinforcing slips or valves still have to be provided. A known device described in German patent 1,179,087 draws a paper web, and a synthetic resin web, simultaneously from two supply rolls in superposed relationship, the two-layer web being provided with transverse perforations by perforating knives with a spacing equal to the length of the slips. One web is then moved laterally by a guide roll, and then placed back on the other web with an off-set in the direction of travel. The mutually off-set double sheets are then torn off from the web by causing folder grippers of the transfer folder gripper cylinder to grip the leading end of the double web so that the web is held fast behind the lines of perforations. The slips conveyed by the transfer cylinder are then provided with coatings of adhesive by an adhesive application roll of an adhesive application device in accordance with the desired format, whereafter the slips are applied by the transfer folder gripper cylinder to the opened bottoms, which run through tangentially in relation to the gripper cylinder. By folding together the bottoms a filling valve is then formed in each of them, the synthetic

resin ply of the double slips projecting further into the interior of the bag than the paper ply so that the inwardly projecting end of the piece of synthetic resin tube may fold up and collapse under the filling pressure and may perform its sealing function.

There are applications in which it is necessary to apply a further slip or piece of tube in addition to the slip torn off a web or the double slip torn from a double web in order to keep to other requirements as regards production.

For example there is in practice a need to apply an additional piece of tube on the slip applied to the bottom, which is shorter than the slips and in the folded condition of the bottom projects to the outside so that after filling the bag there is a possibility of sealing it off by welding or bonding the piece of tube projecting to the outside.

In other cases it is necessary to provide the valves with a venting means so that air trapped in the bag may escape. This is done by at least partly enveloping with the valve a slip of non-woven material, which breathes and permits discharge of air.

In order to apply an additional slip, or a piece of tube, on the valve slip, or slips, or in order to include with the filling valve constituted by the valve slip with a ply of non-woven material for venting off air, it is necessary in the case of the known machine to provide a further device (as seen in the direction of movement of the bag bottom) by which individual pieces are detached from a tubular web and are placed in the open bottom on the slips which are already applied. Alternatively it is necessary to provide a further means upstream from the device, which for instance applies the non-woven material strips serving for

the escape of air. Therefore, in order to improve upon the known device in this way it is necessary to provide additional assemblies, which however increase the length of the apparatus and increase its price. Furthermore it is only possible to upgrade the known machines at a reasonable expense in such a manner that such means for the application of additional slips or of strips of non-woven material are placed downstream and/or upstream from it.

Accordingly this invention seeks to provide a device of this type in which additional slips, pieces of tube or plies of non-woven material may economically be applied to workpieces, and more particularly to the bottoms of bags, preferably in such a way that the overall length of the device is not increased. Furthermore, it should be possible to upgrade existing equipment and plant at a reasonable expense.

According to the present invention, an intermediate cylinder is interposed between an applying folding gripper cylinder (for the application of the combined slips and/or pieces of tube to the workpieces) and the transfer folding cylinder which received the slips and /or pieces of tube derived from the first two ply web. The intermediate cylinder is placed to provide a roll nip with the applying cylinder, and to receive both the slips carried by the transfer cylinder and further slips derived from a second web. The slips are combined on the intermediate cylinder in the desired format relationship, and then transferred from it to the applying folding cylinder, which then applies the slips to the moving workpieces, for example open bag ends, passing through the device.

Hence in a first broad embodiment this invention provides a device for the application of a plurality of slips derived from two separate webs comprising a first two ply web and a second web to a moving workpiece which

includes in combination:

(i) a transfer folding cylinder adapted to receive in sequence separate two ply slips derived from the first two ply web;

(ii) an intermediate cylinder adapted both to receive the slips derived from the first web from the transfer cylinder, and to combine them with further slips derived from the second web; and

(iii) an applying folding cylinder adapted to transfer the combined slips derived from both the first and the second webs on the intermediate cylinder to the workpieces.

Hence, in accordance with the invention for the application of additional slips, pieces of tube or inlays complete applying devices are avoided, since the additional slips, pieces of tube or inlays are combined even prior to application to the bottoms or workpieces, together as units to be applied, which are then jointly applied in one working step with correct alignment with the format. The device in accordance with the invention is consequently responsible not only for a reduction of the overall length but furthermore and more particularly to a reduction in the number of application rolls, since two lines of slips operate on a common application folding gripper cylinder.

In accordance with a further embodiment the intermediate cylinder is provided with a row of needles, or the like, in order to receive the slips or the like from the transfer cylinder.

In an alternative embodiment, the intermediate cylinder is in engagement with a glue application cylinder belonging to a glue application system, which furnishes the slips or the like with coatings of glue aligned with the format thereof.

In a further advantageous embodiment, the intermediate cylinder is provided with a folder bar or the like in front of the row of needles in terms of the direction of rotation, which folder bar inserts the leading end of the slip or the like which is torn off or detached into a folding gripper of the application cylinder. During further movement through the system the coating of glue on the slip or double slip retained on the intermediate cylinder comes into contact with the slip or the like torn from the second web of material and adheres thereto so that it is entrained by the slip or the like held on the application cylinder by the folding grippers and applied with the slip or the like to the workpiece or to the open bottom.

It is convenient if the application cylinder has the glue application roll of a second adhesive applying system in engagement with it, which provides the slips or pieces of tube, which are torn off or otherwise detached from the first and the second webs of material, with a coating of glue in a correct format alignment.

One working embodiment of the invention, shown in a diagrammatic side elevation, will now be described in more detail with reference to the drawing. This figure shows a device for the application of combined packages of slips and/or pieces of tube, whose slips and/or pieces of tube have been torn from two separately supplied webs of material, to drawn-out bag bottoms.

A two-ply web 1, of which one ply typically consists of paper and the other one consists of synthetic resin, which are drawn off from supply rolls, not illustrated, is fed by the pair of feed rolls 2. The webs then pass to the transverse perforating device 4, which perforates both webs. The resin ply then passes over the pair of rollers 5 and becomes laterally off-set relative to

the paper ply. The resin and paper plies are combined together again by the pair of rollers 3. The tearing off of the individual two-ply pieces of web, to provide the slips, occurs between the pair of feed rolls 3 and the pair of folding gripper cylinders 6, of which the cylinder provided with the folding grippers is responsible for the further conveying of the two ply web. To this extent the device is comparable with the prior art device in accordance with the said German patent 1,179,087.

The folding gripper cylinder of the pair of cylinders 6 then transfers the two ply web to a transfer cylinder 7, which is the interposed intermediate cylinder. This cylinder moves the slips or, respectively, the double slips past an adhesive application device 8, by means of which the inner side of the slips is provided with a coating of glue or adhesive with the correct format alignment.

The transfer or intermediate cylinder 7 is provided with a row of needles for the purpose of receiving the slips, or double slips, in front of which row, as seen in the direction of rotation, a folder bar or a folding blade is arranged. The double slip torn off by the folding gripper cylinder pair 6 is held by the row of needles, not illustrated, of the intermediate cylinder 7.

On further rotation of the intermediate cylinder 7 the folder bar, arranged in front of the row of needles, comes into contact with the folding grippers provided on the application folding gripper cylinder 9 so that the leading end of a tube web 10 is held by the folding gripper and as a result the latter tears off a piece of tube along a transverse perforation line. The supply of the tube web 10 is described in the following in more detail. This piece of tube then sticks to the coating of adhesive previously applied to the inner side of the double slips so that such double slips are entrained by the piece of tube held by the

application folding gripper cylinder. On further rotation of the application folding gripper cylinder the package of slips or pieces of tube runs past the adhesive application system 11, by which the latter is provided with the coating of glue in format. The package or stack of slips or pieces of tube prepared in this manner and provided with adhesive is then thrust against the still open bottom 12 of a bag 13 by the application folding gripper cylinder 9.

After this the bag bottom is folded together in a known manner so that a double-ply valve tube is formed by the double slips together with a further piece of tube torn from the web 10.

The tube web 10 is firstly drawn off as a flat web 14 from a supply roll, not illustrated. It is then supplied via the rolls 15, 16 and 17 to the tube forming device 18, in which the flat web is laid together as a tube web 10. The tube 10 formed in this manner may have the same breadth as the eventual bottom, or it may be substantially narrower.

There is furthermore the possibility of having a tube web 10 which is broader than the finished bottom in the flat condition of the web so that by folding together the bottom the edges of the tube web are as well folded together on either side for reinforcement and are folded over.

The tube web 10 is advanced by pairs of feed rolls 19 and 20, the web being provided with transverse perforations by the perforating device 21 between the pairs of feed rolls 19 and 20.

Using the above described device it is possible as well to have the web 14 in the form of a single ply or double ply one and to do without the tube forming station 18 so that an additional slip is applied to the slip or double slip conveyed by the intermediate cylinder 7. The web 1 may

furthermore be in the form of a web of non-woven material so that after the formation of the bottom a filling valve, surrounded by a web of non-woven material is formed by folding the bottom together.

If it is not desired to off-set the two plies of the web 1, the guide rolls 5 are not used.

The embodiments of the invention in which an exclusive property or privilege is claimed are defined as follows:

1. An device for the application of a plurality of slips derived from two separate webs comprising a first two ply web and a second web to a moving workpiece which includes in combination:

(i) a transfer folding cylinder adapted to receive in sequence separate two ply slips derived from the first two ply web;

(ii) an intermediate cylinder adapted both to receive the slips derived from the first web from the transfer cylinder, and to combine them with further slips derived from the second web; and

(iii) an applying folding cylinder adapted to transfer the combined slips derived from both the first and the second webs on the intermediate cylinder to the workpieces.

2. The device as claimed in Claim 1 wherein the intermediate cylinder is provided with a row of needles or the like for receiving the slips from the transfer folding gripper cylinder.

3. The device as claimed in Claim 1 further including a glue application roll of a first glue application system in engagement with the intermediate cylinder, which glue application roll provides the slips with coatings of glue aligned with the format.

4. The device as claimed in Claim 1 wherein the intermediate cylinder is provided with a folder bar in the direction of rotation before the row of needles, which folder bar inserts the leading end of the slip which is detached from the second web into a folding gripper of the application folding gripper cylinder.

5. The device as claimed in Claim 1 further including a glue application roll of a second glue application system in engagement with the application folding gripper cylinder, which roll provides slips detached from the second web with coatings of glue in alignment with the format.

6. The device according to Claim 1 wherein at least one of the applied slips is tubular.

7. The device according to Claim 6 wherein a slip derived from one ply of the first web is tubular.

8. The device according to Claim 6 wherein the slip derived from the second web is tubular.

9. The device according to Claim 1 wherein at least one of the applied slips comprises a non-woven material.

10. The device according to Claim 9 wherein a slip derived from the first web comprises a non-woven material.

11. The device according to Claim 1 adapted to apply the combined slips to workpieces comprising drawn up and still open bag bottoms.

2078847

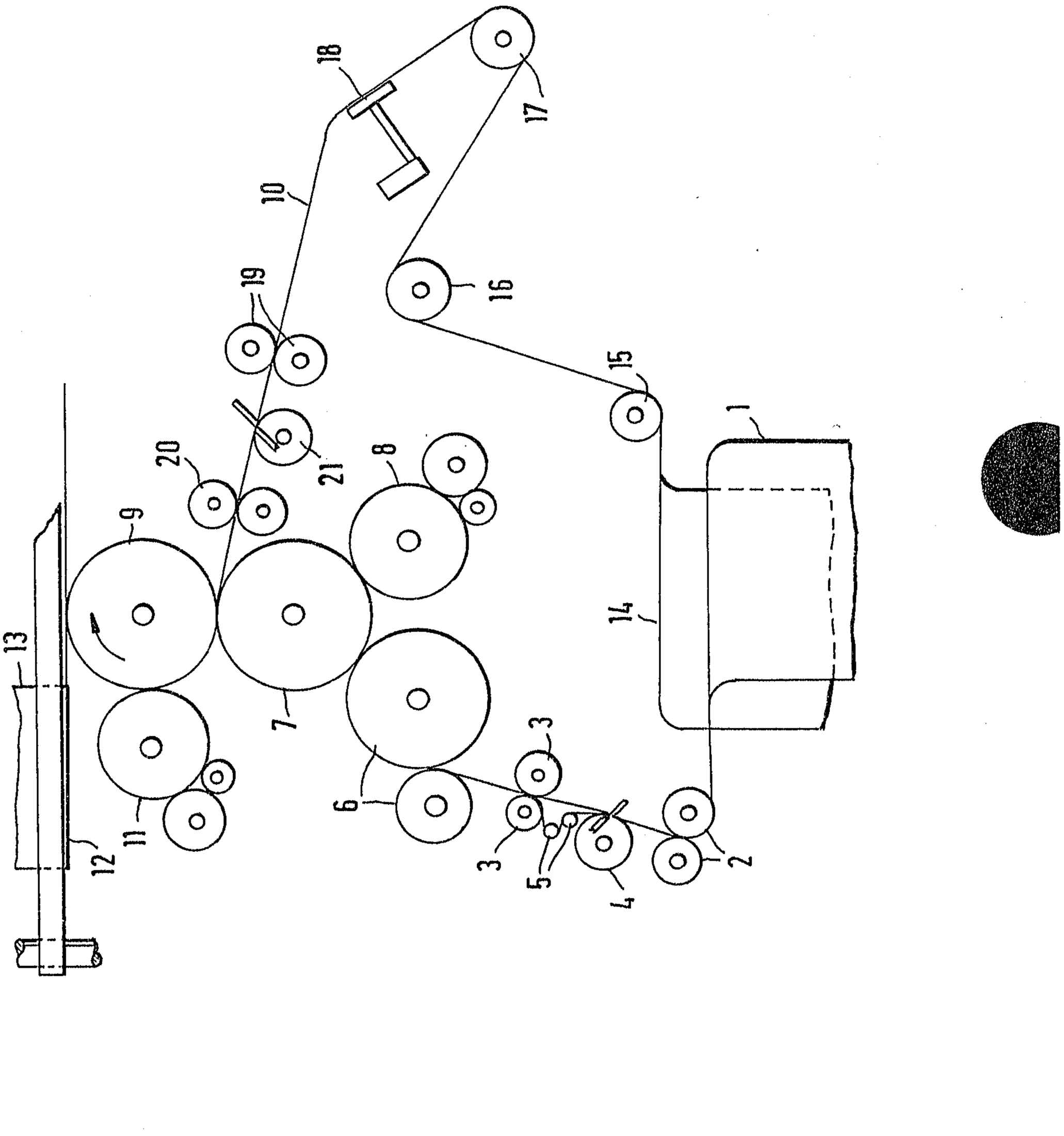

SHAPIRO, COHEN, ANDREWS, FINLAYSON

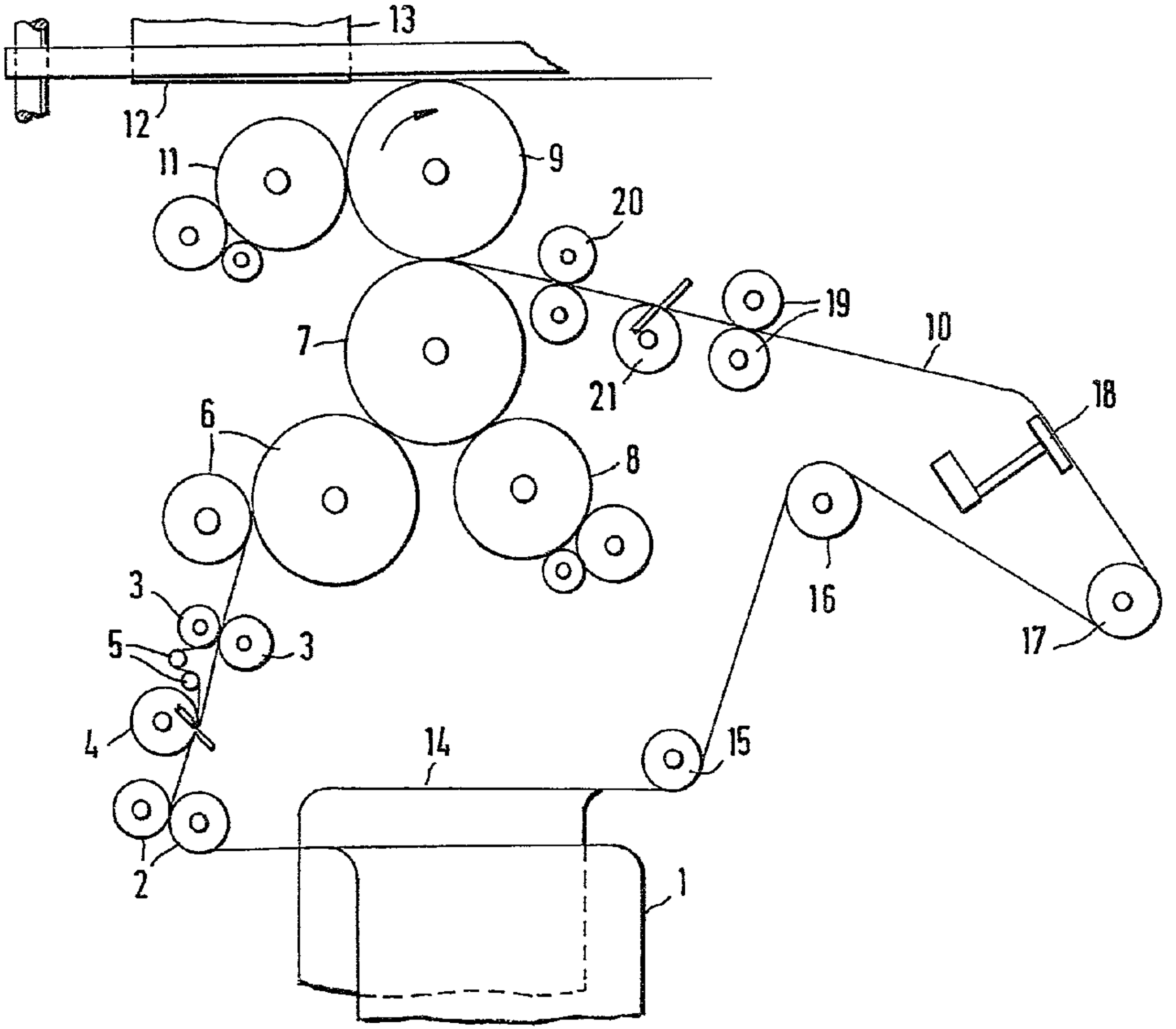
13
12
11
9
20
19
10
18
7
21
6
8
16
17
3
3
5
4
14
15
2
1