J. C. RINGE.

SCALLOP STITCHING MACHINE.

APPLICATION FILED MAY 19, 1913.

1,158,391.

Patented Oct. 26, 1915.

3 SHEETS—SHEET 1.

Fig. 1.

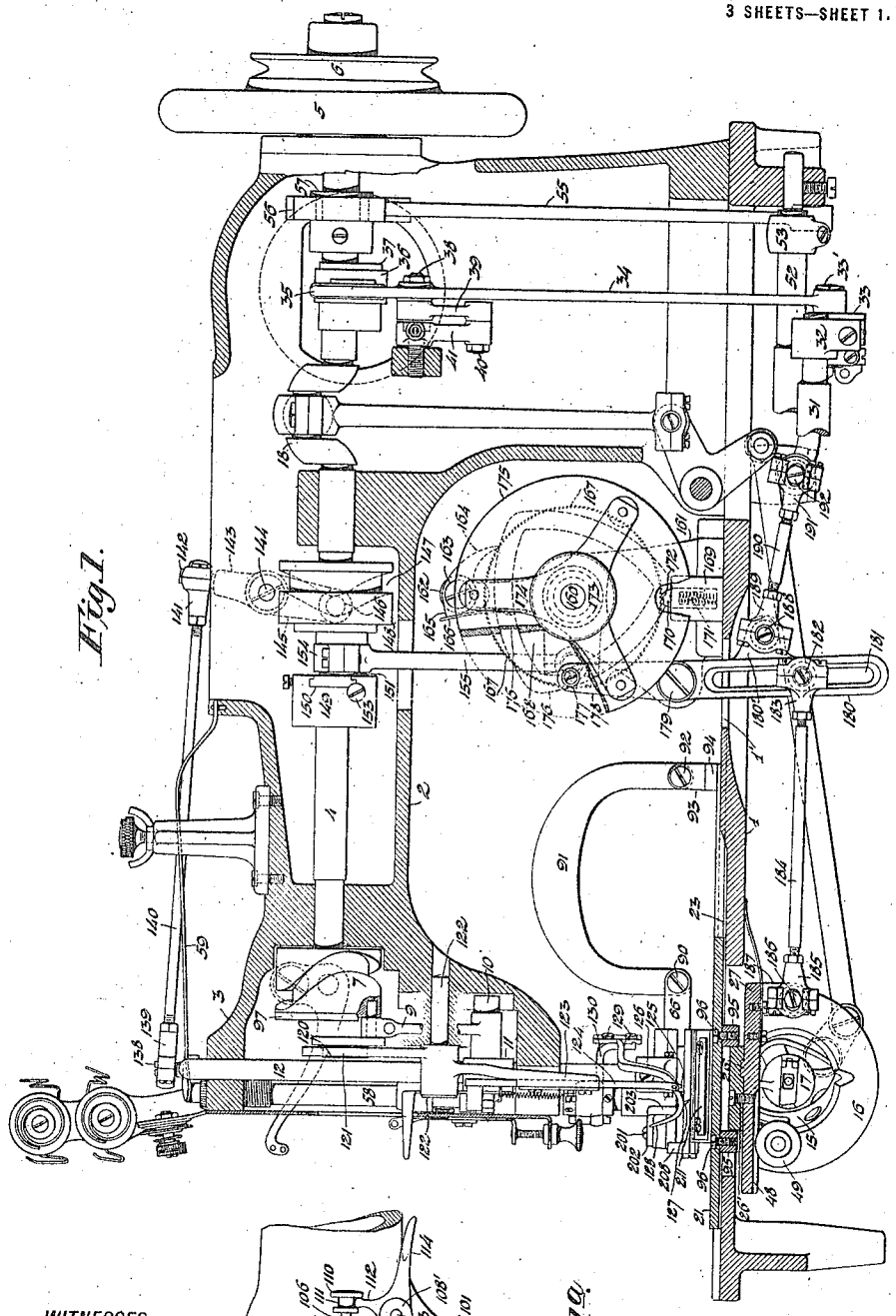

Fig. 1a.

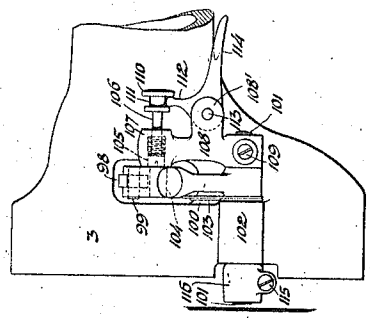

WITNESSES:

Leonard E. Fischer.

Erra L. Terra

INVENTOR

John C. Ringe

BY

Henry J. Miller

ATTORNEY

NORRIS PETERS, INC., LITHO., WASHINGTON, D. C.

J. C. RINGE.

SCALLOP STITCHING MACHINE.

APPLICATION FILED MAY 19, 1913.

1,158,391.

Patented Oct. 26, 1915.

3 SHEETS—SHEET 2.

Fig. 2.

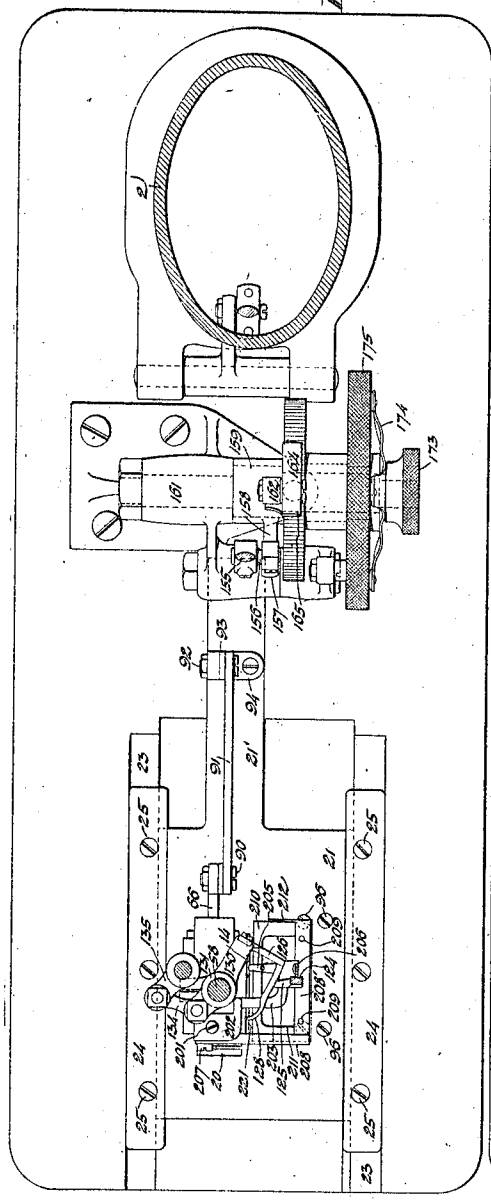

Fig. 3.

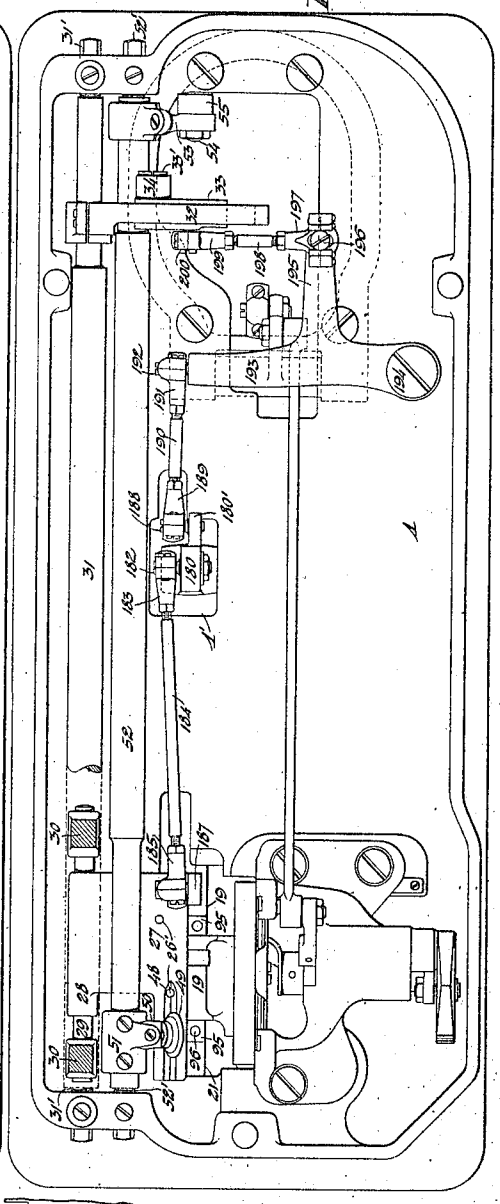

WITNESSES:

Leonard E. Fischer.

Géza L. Terna.

Fig. 2a.

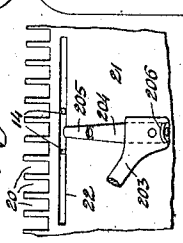

INVENTOR

John C. Ringe

BY

Henry J. Miller

ATTORNEY

J. C. RINGE.

SCALLOP STITCHING MACHINE.

APPLICATION FILED MAY 19, 1913.

1,158,391.

Patented Oct. 26, 1915.

3 SHEETS—SHEET 3.

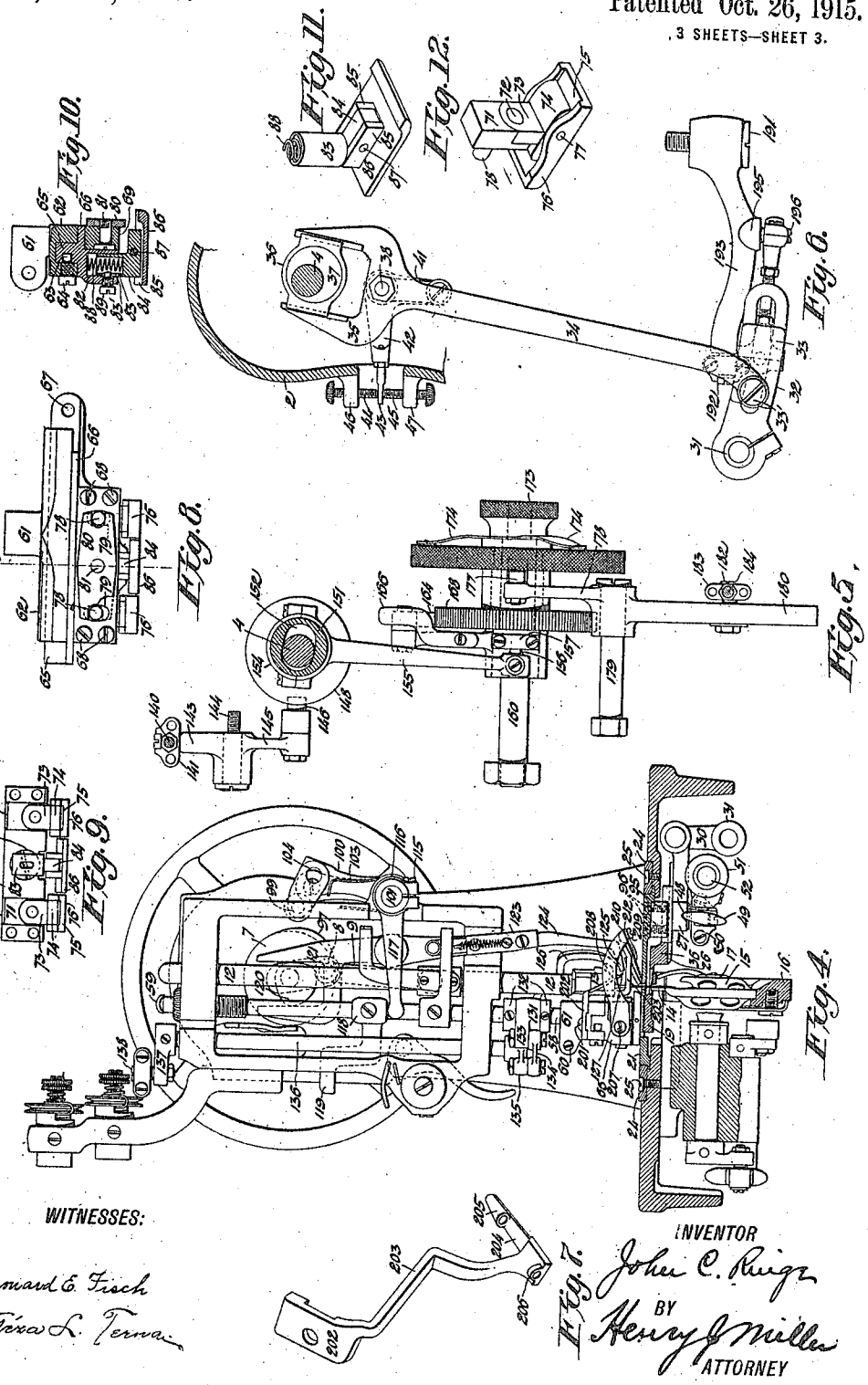

WITNESSES:

Leonard E. Fisch

Gisa L. Ternan

INVENTOR

John C. Ringe

BY

Henry J. Miller

ATTORNEY

NORRIS PETERS, INC., LITHO., WASHINGTON, D. C.

UNITED STATES PATENT OFFICE.

JOHN C. RINGE, OF BRIDGEPORT, CONNECTICUT, ASSIGNOR TO THE SINGER MANUFACTURING COMPANY, A CORPORATION OF NEW JERSEY.

SCALLOP-STITCHING MACHINE.

1,158,391. Specification of Letters Patent. Patented Oct. 26, 1915.

Application filed May 19, 1913. Serial No. 768,440.

To all whom it may concern:

Be it known that I, JOHN C. RINGE, a citizen of the United States, residing at Bridgeport, in the county of Fairfield and State of Connecticut, have invented certain new and useful Improvements in Scallop-Stitching Machines, of which the following is a specification, reference being had therein to the accompanying drawings.

This invention relates to an improvement on, or modification of, the Singer scalloping machine forming the subject of the patent of Martin Hemleb, No. 1,102,405, dated July 7, 1914, and is designed, like said machine, for production of series of substantially parallel seams, whether rectilinear, zigzag or scalloped, with an embroidery thread led in a sinuous path and secured upon the face of the work by means of said parallel seams, the forms of said seams being controlled by a pattern-cam which imparts sidewise work-shifting movements to the feed-dog and therewith also to the throat plate.

The present invention has for its primary object to provide for the production of scalloped seams of enhanced appearance and conforming more strictly than has been usually possible heretofore with the pattern represented by the pattern-cam.

In accordance with the invention, in order to eliminate liability to drag upon the goods being shifted sidewise, occasioned by friction due to the engagement of the upper face thereof by the presser-foot, which tends to destroy the form of the scallops, the presser-foot is arranged to participate in the sidewise shifting movement, and it is further adapted to conform with the surface of the work in its variations in thickness, produced by the scallop, by construction in several sections arranged side-by-side each independently mounted, with the outermost sections connected together for reciprocal rising and falling movement and the intermediate section or sections adapted to yield directly in the path of the stitch-forming mechanism.

The presser-foot preferably carries in advance of the stitching mechanism a smoothing plate formed with an inspection aperture, above which is arranged an inclined tubular stripper-finger adapted not only to strip the work from the needles in their ascent but to supply, when desired, a filling cord beneath the embroidery thread.

It is a desideratum to vary the length of the stitches of the scallops so as to overcome the effect of optical illusion produced by apparent increase of the spacing apart of the scallop-stitches toward the points of each scallop. To this end, means are provided for varying the extent of rocking movements of the feed-actuating rock-shaft so as to effect, on the sidewise shifting movement of the feed-dog, the shifting of the connection between the actuating means and a crank-arm on said rock-shaft.

In the production of seams involving comparatively abrupt curves, it is desirable to relieve the pressure of the presser-foot upon the work while the needles are in the latter, so that the fabric may be turned slightly around the needles under its own elasticity without the resistance thereto normally imposed by the presser-foot. Automatically acting means are provided for imparting this lifting movement to the presser-foot, such means being adapted to be rendered ineffective so long as the general direction of feed is in a straight line, but adapted to be thrown into action when a short curve is to be made.

In the accompanying drawings, Figure 1 is a sectional side elevation of a machine embodying the present improvements; and Fig. 1ª an external view of a portion of the bracket-arm head and the presser-foot lifter with its throw-out device; Fig. 2 is a plan of portions of the machine beneath the bracket-arm; and Fig. 2ª a plan, upon an enlarged scale, of a portion of the throat-plate and the stripper-finger. Fig. 3 is a view of the under side of the machine. Fig. 4 is a front elevation of the machine in partial transverse section with the base-plate in section. Fig. 5 is an edge view of the pattern cam-wheel and its actuating means, and Fig. 6 a side elevation of the feed-actuating means. Fig. 7 is a perspective view of the stripper-finger and its supporting arm. Fig. 8 is an elevation of the presser-foot and slide-block to which it is attached, Fig. 9 a rear side view of the presser-foot, with certain portions omitted, and Fig. 10 a transverse sectional elevation of the parts represented in Fig. 8. Fig. 11 is a perspective view of the

central presser-foot section and Fig. 12 a similar view of one of the lateral presser-foot sections.

The machine frame comprises the bed-plate 1 and overhanging bracket-arm 2 with head 3 in which is journaled the main-shaft 4 carrying at its rearward end the balance-wheel 5 and belt-wheel 6. At its forward end the main-shaft has the take-up cam-cylinder 7 with crank-pin 8 connected by the pitman 9 with the lateral stud 10 upon the collar 11 fixed upon the needle-bar 12 which is provided with the needle-clamp 13 carrying the spaced needles 14 which are in practice disposed in a line parallel with the main-shaft. Coöperating with the needles in the production of parallel seams is the shuttle 15 fitted in the shuttle-race 16 and carrying the thread-case 17, the shuttle being actuated through usual or suitable connections with the actuating crank 18 of the main-shaft.

The feeding mechanism comprises the usual feed-dog 19 which is in practice provided with a series of serrated parallel work-engaging members each entering its respective slot 20 in the throat-plate 21, which is shown provided (Fig. 2ª) with the elongated transverse needle-aperture 22. The top of the bed-plate is recessed to form a seat 23 upon which the throat-plate is slidingly mounted, being confined thereon by means of the guide-strips 24 secured in position by the fastening screws 25.

The feed-dog has a tongue-and-groove connection 26 with the carrier 27 upon which it is secured by screws 26′, said carrier being formed with the boss 28 which is fitted upon the supporting pin 29 mounted in the upwardly projecting arms 30 of the feed rock-shaft 31 which is journaled upon the usual bearing-pins 31′. Operative rocking movements are imparted to the feed rock-shaft through the longitudinally slotted crank-arm 32 fixed upon its rearward end and having fitted thereto the slide-block 33 carrying the stud-screw 33′ entering the apertured lower extremity of the link-bar 34 whose opposite end is provided with the yoke 35 embracing the collar 36 fitted upon the feed-actuating eccentric 37 carried by the main-shaft. As in other Singer machines, the link-bar 34 carries the lateral stud 38 embraced by one end of the link 39 whose apertured opposite end is entered by the stud 40 carried by the arm 41 of the feed-regulating angle-lever whose other arm 42 has a reduced and flattened outer end portion 43 confined between the adjusting screws 44 and 45 mounted in the fixed lugs 46 and 47 sustained by the bracket-arm 2.

The lower side of the feed-dog carrier 27 is formed with a longitudinal groove 48 entered by the sidewise tilting roller 49 which is carried by the lateral arm 50 whose hub 51 is fixed upon the forward end of the feed-lifting rock-shaft 52 which is mounted upon the bearing-pins 52′ and has fixed upon its rearward end the crank-arm 53 pivotally connected by the pin 54 with the lower end of the pitman-rod 55 which has at its upper end the strap 56 embracing the feed-lifting eccentric 57 upon the main-shaft. The feeding mechanism imparts to the work its advance movement crosswise of the bed-plate and of the line of the needles.

The presser-bar 58 is journaled in the head of the bracket-arm and is normally pressed downwardly by means of the spring 59. Secured upon its lower extremity by means of the clamp-screw 60 is the split hub 61 of a cross-member 62 formed in its lower side with a slideway entered at one side by the reduced extremity 63 of the screw-pin 64 (Fig. 10). Fitted within said slideway is the tongue 65 upon the upper side of the slide-block 66 having at one end the aperture 67, said tongue being provided with a lateral channel which is entered by the reduced extremity 63 of the screw-pin 64 to lock the slide-block within said slideway. As represented in Figs. 8 to 12 inclusive, the slide-block 66 has secured to a depending portion thereof by screws 68 a bar 69 which is provided in the inner face near the opposite ends with the parallel vertical recesses 70 in which are fitted the blocks 71 each carrying a pivotal stud 72 which enters an aperture in the lug 73 of the plate 74. The plate 74 has its opposite edges fitted between the walls of the channel 75 formed in the upper face of the pressure plate 76 to which it is pivotally secured by means of the cross-pin 77 disposed transversely to the stud 72, whereby the pressure plate 76 is adapted to rock either crosswise or lengthwise to accommodate itself to unevenness in the fabric.

Each of the blocks 71 carries a forwardly projecting stud 78 passing through the slot 79 of the bar 69 and entering the forked extremity of the rocking plate 80 fulcrumed by means of the screw-stud 81 upon the bar 69 intermediate the recesses 70. The rocking element 80 thus forms a compensating connection between the outer presser-foot sections which permits them to accommodate themselves to different thicknesses of fabric upon opposite sides of the stitching point.

The slide-block 66 is formed rearward of the fulcrum-stud 81 with a vertical socket 82 entered by the tubular boss 83 of a rectangular block 84 fitted between the parallel upturned flanges 85 of the central pressure plate 86 which is pivotally connected with said block by means of the cross-pin 87 so as to rock thereon. The pressure plate 86 is normally pressed downwardly by means of the spring 88 within the hub 83, which latter is formed with a slot 83′ en-

tered by the reduced inner end of the screw-stud 89 whereby the parts are locked together and prevented from turning relatively to each other.

The aperture 67 of the slide-block 66 is entered by the screw-bolt 90 by which the slide-block is pivotally connected with one of the apertured ends of the arched link 91 whose other end is similarly connected by means of the screw-bolt 92 with a post 93 whose foot 94 is secured upon the lateral extension 21′ of the sidewise movable throat-plate 21, the latter being provided with depending guide-blocks 95 secured thereto by screws 96 and embracing the opposite edges of the feed-dog 19 (Fig. 1), so as to partake of its lateral movements.

Formed upon the outer portion of the take-up cam-cylinder 7 is the eccentric cam-track 97 adapted for engagement by the roller 98 which is mounted upon the pin 99 within the forked extremity of the swinging arm 100 loosely mounted upon the rocking pin 101 which is journaled in the bearing boss 102 of the bracket-arm head 3. The arm 100 is normally maintained by means of the spring 103 with the roller 98 withdrawn from operative relation with the cam-track 97.

The arm 100 is formed with a transverse aperture 104 which, when said arm is pressed forward into operative relation with the cam-track 97, is entered by the head 105 of the spring-pressed coupling pin 106 journaled in the apertured boss 107 of an arm 108 secured by means of the set-screw 109 upon the rearward end of the rocking pin 101. The coupling pin 106 is formed with a head 110 having a groove 111 entered by the rounded extremity of the arm 112 of an elbow-lever mounted upon the fulcrum-pin 113 between the spaced lateral ears 108′ of the arm 108 and provided with a lateral arm 114.

Secured upon the forward end of the rocking pin 101 by means of the clamp-screw 115 is the split hub 116 of a lateral arm 117 whose rounded extremity is extended beneath the hub 118 of the rearwardly extending lifting lug 119 secured upon the presser-bar 58. When the arms 100 and 108 are coupled together, the presser-bar receives short lifting movements by the action of the cam-track 97 through the connections thus described, and pressure by the operator upon the arm 114 of the coupling pin retracting elbow-lever serves to disengage the coupling pin from the arm 100 which is thus permitted to retreat from the cam element 97 into inoperative position, thereby suspending the presser-foot lifting action. In the normal operation of the machine, the presser-foot is pressed uniformly upon the work under the action of the spring 59, and the automatically acting lifting device is designed for use only in stitching around curves which are sufficiently abrupt to render it difficult to properly guide the work without release of the pressure of the presser-foot thereon.

As represented in the patent above referred to, the main-shaft carries at its forward end a cam 120 which is embraced by the forked upper arm 121 of a rock-lever fulcrumed upon the pin 122 and having a depending arm 123 provided with an extension 124 formed with the downwardly inclined and apertured end portion 125 adapted to carry the covering or embroidery thread and receiving from the cam 120 operative movements in the direction of feed. The spreader comprises the stem 126 having the depending thread-engaging spur 127 and the upturned thread-deflecting finger 128, the stem being secured by screws 129 to a depending extension of the lateral arm 130, whose hub 131 is journaled upon the presser-bar 58 between the thrust-collars 132 and is provided with a second arm 133 connected by the link 134 with the crank-arm 135 upon the vertical rock-shaft 136 having at its upper end the crank-arm 137 carrying the stud-pin 138. The stud-pin 138 is embraced by the strap 139 at one end of a pitman 140 having at its opposite end the strap 141 which embraces the stud-pin 142 carried by the upper arm 143 of a rock-lever fulcrumed at 144 upon the bracket-arm and having the depending arm 145 carrying the roller-stud 146 which enters the cam-groove 147 of the cam-cylinder 148 which acts, through the described connections, to vibrate the spreader in an arcuate path oblique to the line of the needles, or around an axis situated behind and unsymmetrically in relation to, the line of the needles.

Upon the main-shaft is fixed a collar 149 having a transverse undercut groove to which is fitted the block 150 carrying the eccentric 151 formed with an elongated clearance aperture 152 embracing the shaft, the block 150 being adapted to be shifted crosswise of the shaft 4 by means of the adjusting screw 153, to change the throw of the eccentric 151 in a manner well known. The eccentric 151 is embraced by the strap 154 at the upper end of the rod 155 whose lower end carries the lateral stud 156 embraced by a strap 157 of the lateral arm 158 of an elbow-lever whose hub 159 is journaled upon the shaft 160 mounted in the bearing bracket 161 and provided with an upwardly extending arm 162 carrying the stud-screw 163 upon which is mounted the actuating pawl 164 having an angular hub 165 upon which rests the free end of a spring 166 by means of which the operative end of the pawl is maintained in engagement with the peripheral teeth 167 of the ratchet-wheel 168 loosely mounted upon the stationary shaft

or stud 160. The foot of the bearing bracket 161 is formed with a socket 169 in which is fitted the detent plug 170 normally pressed upwardly by means of the spring 171 and provided in its upper end with a tooth 172 adapted to engage the ratchet-teeth 167 to prevent retrograde movement of the ratchet-wheel.

Mounted upon the forward end of the ratchet-wheel hub and detachably retained thereon by means of the nut 173 upon the threaded end of the stud 160 and the interposed plural-armed spring-plate 174 is the cam-disk 175 which is shown in Fig. 1 formed with the triangular cam-groove 176 entered by the roller-stud 177 upon the upper arm 178 of a rock-lever mounted upon the fulcrum-stud 179 sustained by the bracket 161 and having the depending arm 180 extending through an aperture 1′ of the bed-plate and provided with the longitudinal slot 181 extending lengthwise thereof. Within the slot 181 is adjustably secured by suitable means the stud-pin 182 embraced by the strap 183 at the rearward end of the pitman 184 provided at its forward end with the strap 185 embracing the stud-pin 186 which is sustained by the depending lug 187 of the feed-dog carrier 27. By the described connections, a slow sidewise movement is imparted to the feed-dog, and through it to the sectional presser-foot, by means of the cam-disk 175, the speed of rotation of which may be varied by adjustment of the position of the actuating eccentric 151 relatively to the main-shaft. By turning the pawl 164 upwardly, the rotation of the cam-wheel may be discontinued so as to produce a straight-away seam.

The rock-lever arm 181 is formed on its rearward edge with a lug 180′ carrying the stud-pin 188 embraced by the strap 189 at one end of a pitman 190 having at its opposite end the strap 191 embracing the stud-pin 192 which is carried by a lever 193 mounted upon the fulcrum screw-stud 194 tapped into the bottom of the bed-plate 1. The lever 193 has a lateral arm 195 carrying the depending stud-pin 196 which is embraced by the strap 197 at one end of the pitman 198 having at its opposite end the strap 199 which embraces the stud-pin 200 tapped into the slide-block 33 of the feed rock-shaft arm 32. The parts are so arranged and proportioned that as the stitching approaches and recedes from the points of the scallops the point of connection of the link-bar 34 with the feed rock-shaft crank-arm 33 correspondingly approaches and recedes from said rock-shaft, thereby effecting a slight progressive increase and decrease, respectively, in the spacing of the stitches so as to prevent their apparent excessive crowding especially in the case of deep scallops with comparatively sharp points.

Rigidly secured upon the top of the cross-member 62 by means of the screw 201 is the shank 202 of a bent arm 203 carrying at its lower end a thin spring blade 204 provided with the tubular stripper-finger 205 and the apertured cord-guiding lug 206 in alinement therewith. The finger 205 is arranged in advance of the presser-foot and inclined downwardly toward and extends partially across the needle-aperture 22 between the needles. This stripper-finger exercises an important function in stripping the fabric from the needles in their rising movement, as the presser-foot is arranged entirely behind the needles. By passing a filling cord through the guide 206 and tubular finger 205, the cord is caused to be embraced within the covering seam so as to assist the covering or embroidery thread in effectively covering the face of the work between the attaching lines of stitches while producing an ornamental raised appearance of the seam.

Secured to the end of the slide-block 66 by means of the fastening screw 207 is a rigid arm 208 having secured to a lateral extension 208′ at the outer end thereof by means of the screws 209 the spring smoothing plate 210 whose forward edge is adapted, when the presser-foot is depressed, to rest upon the throat-plate beneath the operative end of the stripper-finger 205 and in advance of the needle-aperture 22. The plate 210 is formed with an inspection aperture 211 to enable the operator to readily see the part of the fabric to which the stitching is to be applied, the free edge of the smoothing plate performing the function, as the term implies, of maintaining the surface of the fabric flat and free from wrinkles immediately in advance of the stitching point. A backing member 212, secured in position by the screws 209, is preferably employed to support the plate 210 when the presser-foot is lifted.

Having thus set forth the nature of the invention, what I claim herein is:—

1. In a sewing machine, the combination with a throat-plate, stitch-forming mechanism, and feeding mechanism including a feed-dog and means for imparting thereto longitudinal work-advancing movements and sidewise step-by-step movements, of a presser-bar movable toward and from the throat-plate, a presser-foot mounted upon said presser-bar and comprising a member movable transversely of and maintained in fixed angular relation with the presser-bar, and means connected with said transversely movable member for imparting to the presser-foot sidewise movements corresponding with those of the feed-dog.

2. In a sewing machine, the combination with a throat-plate, stitch-forming mecha-

nism, and feeding mechanism including a feed-dog and means for imparting thereto longitudinal work-advancing movements and sidewise step-by-step movements, of a presser-bar movable toward and from the throat-plate, a presser-foot mounted upon said presser-bar and comprising a member movable transversely of and maintained in fixed angular relation with the presser-bar and carrying laterally spaced and positively connected compensating pressure members, and means connected with said transversely movable member for imparting to the presser-foot sidewise movements corresponding with those of the feed-dog.

3. In a sewing machine, the combination with a throat-plate, stitch-forming mechanism, and feeding mechanism including a feed-dog and means for imparting thereto longitudinal work-advancing movements and sidewise step-by-step movements, of a presser-bar movable toward and from the throat-plate, a presser-foot mounted upon said presser-bar and comprising a member movable transversely of and maintained in fixed angular relation with the presser-bar and carrying laterally spaced and positively connected compensating pressure members and an intermediate independently yielding member, and means connected with said transversely movable member for imparting to the presser-foot sidewise movements corresponding with those of the feed-dog.

4. In a sewing machine, the combination with stitch-forming mechanism and feeding mechanism including a feed-dog and means for imparting thereto longitudinal work-advancing movements and sidewise movements, of a spring-pressed presser-bar mounted in fixed bearings and provided with a transverse slideway, a slide-block fitter to said slideway, a presser-foot sustained by said block, and a link pivotally connected with said block for imparting to said presser-foot sidewise movements.

5. In a sewing machine, the combination with stitch-forming mechanism and feeding mechanism including a feed-dog and means for imparting thereto work-advancing and sidewise movements, of a presser-foot composed of a plurality of independent sections arranged crosswise of the direction of feed, a compensating connection between the outermost sections, and means for yieldingly sustaining an intermediate section.

6. In a sewing machine, the combination with stitch-forming mechanism and feeding mechanism including a feed-dog and means for imparting thereto work-advancing and sidewise movements, of a presser-foot composed of a plurality of independent sections arranged crosswise of the direction of feed, and a rocking element pivotally connected with each of the outermost sections and having an intermediate fulcrum.

7. In a sewing machine, the combination with stitch-forming mechanism and feeding mechanism including a feed-dog and means for imparting thereto longitudinal work-advancing movements and sidewise movements, of a presser-bar provided with a cross-member formed with a slideway, a slide-block fitted within said slideway and formed with a series of parallel recesses, a presser-foot constructed with a plurality of independent sections each having a shank fitted within one of said recesses, a rocking element fulcrumed upon said slide-block and pivotally connected with the outermost presser-foot sections, a spring interposed between an intermediate section and the slide-block, and a connection between the feed-dog actuating means and said slide-block for imparting to the latter sidewise movements.

8. In a sewing machine, the combination with stitch-forming mechanism and feeding mechanism including a feed-dog, and means whereby they are adapted to produce parallel seams connected by covering threads, of a presser-foot opposed to said feed-dog, automatically acting means for lifting the presser-foot during the action of the stitch-forming mechanism, and means including a manually operable lever for rendering said lifting means ineffective while the stitching proceeds.

9. In a sewing machine, the combination with stitch-forming mechanism comprising a plurality of spaced needles reciprocating in unison, and feeding mechanism including a feed-dog, and means whereby they are adapted for production of parallel seams, of a presser-foot opposed to said feed-dog, automatically acting means including operative elements connected together by a coupling device and operating while the needles are in the work for lifting the presser-foot, and means acting through said coupling device to disconnect said elements for rendering said lifting means ineffective while the stitching proceeds.

10. In a sewing machine, the combination with stitch-forming mechanism comprising a plurality of spaced needles reciprocating in unison, and feeding mechanism including a feed-dog, and means whereby they are adapted for production of parallel seams, of a presser-foot opposed to said feed-dog, and presser-foot lifting means comprising a rock-shaft operatively connected with the presser-foot, an arm fixed upon said rock-shaft, an adjacent arm loosely mounted on said rock-shaft, and a coupling element affording a detachable connection between said fixed and loosely mounted arms.

11. In a sewing machine, the combination with stitch-forming mechanism and feeding mechanism including a feed-dog and means for imparting thereto longitudinal work-advancing movements whereby parallel seams

may be produced, of shifting means for producing relative sidewise movements between the stitch-forming mechanism and the feed-dog whereby said seams are produced in the form of scallops, and means controlled by the lateral position of the feed-dog relatively to the stitch-forming mechanism for progressively varying the spacing apart of the stitches between the middle portions and ends of the scallops.

12. In a sewing machine, the combination with stitch-forming mechanism comprising a plurality of needles mounted in fixed spacing apart, and feeding mechanism including a feed-dog and means for imparting thereto longitudinal work-advancing movements whereby parallel seams may be produced, of shifting means for producing relative sidewise movements between the stitch-forming mechanism and the feed-dog whereby said seams are produced in the form of scallops, and means connected with said shifting means and acting through the work-advancing means for progressively varying the spacing apart of the stitches between the middle portions and ends of the scallops.

13. In a sewing machine, the combination with stitch-forming mechanism comprising a plurality of needles connected to reciprocate in unison, and means coöperating therewith in producing parallel seams connected by thread overlying the face of the work intermediate said seams, and feeding mechanism including a feed-dog and means for imparting thereto a longitudinal work-advancing movement following each simultaneous reciprocation of the needles whereby parallel seams may be produced, of shifting means for producing relative sidewise movements between the stitch-forming mechanism and the feed-dog whereby said seams are produced in the form of scallops, and means controlled by the lateral position of the feed-dog relatively to the stitch-forming mechanism for progressively varying the spacing apart of the stitches between the middle portions and ends of the scallops.

14. In a sewing machine, the combination with stitch-forming mechanism and feeding mechanism including a feed-dog and means for imparting thereto longitudinal work-advancing movements whereby parallel seams may be produced, of shifting means for imparting to the feed-dog sidewise movements whereby said seams are produced in the form of scallops, and means connected with the feed-dog and acting through its work-advancing means for progressively varying the spacing apart of the stitches between the middle portions and ends of the scallops.

15. In a sewing machine, the combination with stitch-forming mechanism including a plurality of spaced needles, feeding mechanism including a feed-dog and means for imparting thereto work-advancing movements, and a thread-carrier movable crosswise of the direction of feed and acting to lay a thread upon the face of the work between the needles, of means for imparting to the feed-dog sidewise movements in the same direction during a succession of stitch-forming periods, and means connected therewith for varying the extent of advance movements of the feed-dog correspondingly with its lateral displacement from an initial position.

16. In a sewing machine, the combination with stitch-forming mechanism including a plurality of spaced needles, feeding mechanism including a feed-dog and means for imparting thereto work-advancing movements, and a thread-carrier movable crosswise of the direction of feed and acting to lay a thread upon the face of the work between the needles, of means having independent connections with the feed-dog and its actuating means and adapted to simultaneously shift the lateral position of the feed-dog and change the extent of its work-advancing movements.

17. In a sewing machine, the combination with stitch-forming mechanism including a plurality of spaced needles, feeding mechanism including a feed-dog disposed rearward of said needles, a thread-carrier movable crosswise of the direction of feed and acting to lay a covering thread upon the face of the work between the needles, and a throat-plate, of a presser-foot disposed rearward of the needles, a downwardly inclined smoothing plate adapted to yield independently of the presser-foot and having its operative edge opposed to the throat-plate and in advance of the needles, and means for imparting step-by-step sidewise movements to the feed-dog, throat-plate and smoothing plate.

18. In a sewing machine, the combination with stitch-forming mechanism including a plurality of spaced needles, feeding mechanism including a feed-dog disposed rearward of said needles, a thread-carrier movable crosswise of the direction of feed and acting to lay a covering thread upon the face of the work between the needles, and a throat-plate, of a presser-foot disposed rearward of the needles, and a downwardly inclined spring smoothing plate formed in its central portion with an inspection aperture and having its operative edge opposed to the throat-plate in advance of the needles.

19. In a sewing machine, the combination with stitch-forming mechanism including a plurality of spaced needles, feeding mechanism including a feed-dog disposed rearward of said needles, a thread-carrier movable crosswise of the direction of feed and acting to lay a covering thread upon the

face of the work between the needles, and a throat-plate, of a presser-foot disposed rearward of the needles, and a downwardly inclined tubular stripper-finger directed intermediate said needles with its lower extremity arranged in close proximity to the throat-plate and adapted to lay a cord beneath said covering thread.

20. In a sewing machine, the combination with stitch-forming mechanism including a plurality of spaced needles, feeding mechanism including a feed-dog with means for imparting thereto work-advancing and sidewise movements, a thread-carrier movable crosswise of the direction of feed and acting to lay a covering thread upon the face of the work between the needles, and a presser-foot opposed to the feed-dog and movable sidewise with the same, of a downwardly inclined tubular stripper-finger directed intermediate and having its extremity in substantial alinement with said needles, and adapted to lay a cord beneath said covering thread.

In testimony whereof, I have signed my name to this specification, in the presence of two subscribing witnesses.

JOHN C. RINGE.

Witnesses:
STANLEY N. SMITH,
HENRY J. MILLER.