E. KOELLA.

SEWING MACHINE.

APPLICATION FILED AUG. 5, 1909. RENEWED DEC. 26, 1912.

1,068,434.

Patented July 29, 1913.

6 SHEETS—SHEET 1.

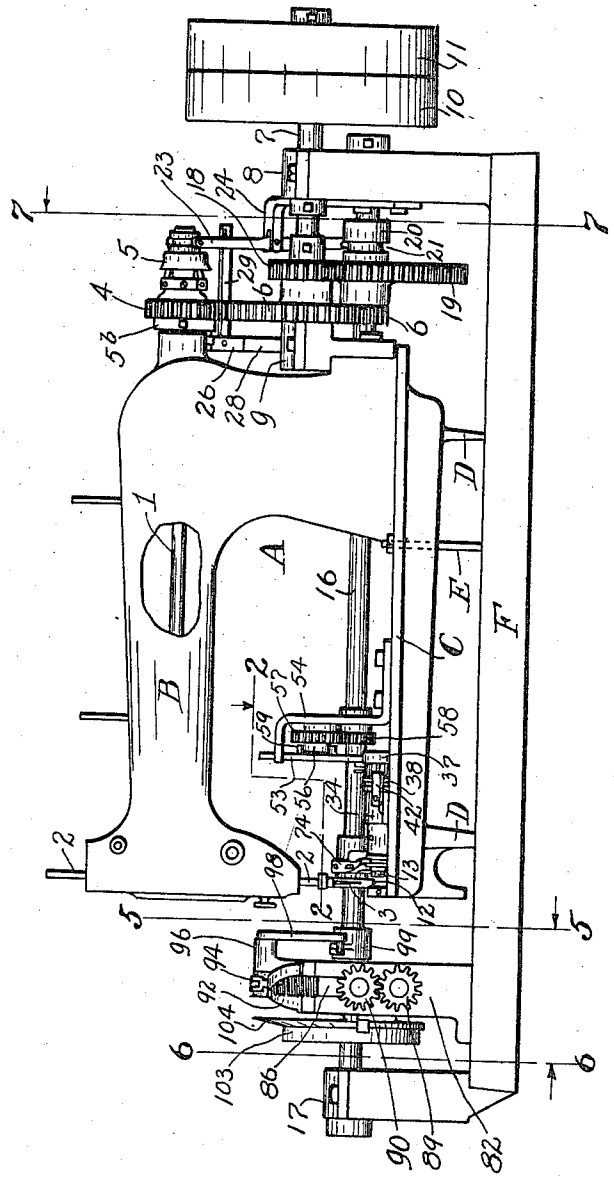

Fig. 1.

Witnesses,
Carrie R. Irey.
Wm Whaley.

Inventor,
Ernest Koella
By Cyrus Keller.
Attorney.

COLUMBIA PLANOGRAPH CO., WASHINGTON, D. C.

E. KOELLA.

SEWING MACHINE.

APPLICATION FILED AUG. 5, 1909. RENEWED DEC. 26, 1912.

1,068,434.

Patented July 29, 1913.

6 SHEETS—SHEET 2.

Fig. 2.

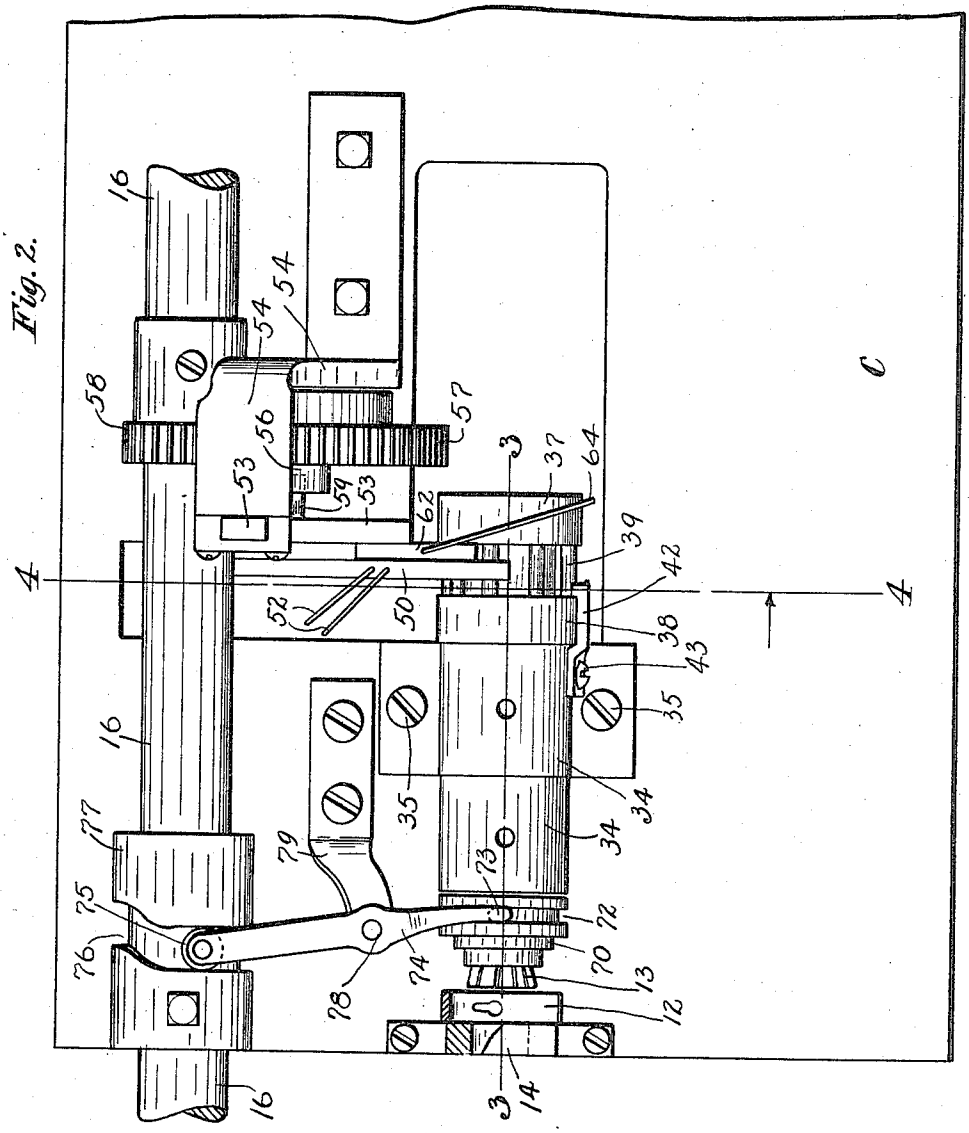

Witnesses,
Carrie R. Ivy.
Wm. Whaley.

Inventor,
Ernest Koella
By Cyrus Kohr
Attorney.

COLUMBIA PLANOGRAPH CO., WASHINGTON, D. C

E. KOELLA.

SEWING MACHINE.

APPLICATION FILED AUG. 5, 1909. RENEWED DEC. 26, 1912.

1,068,434. Patented July 29, 1913.

6 SHEETS—SHEET 3.

Fig. 4.

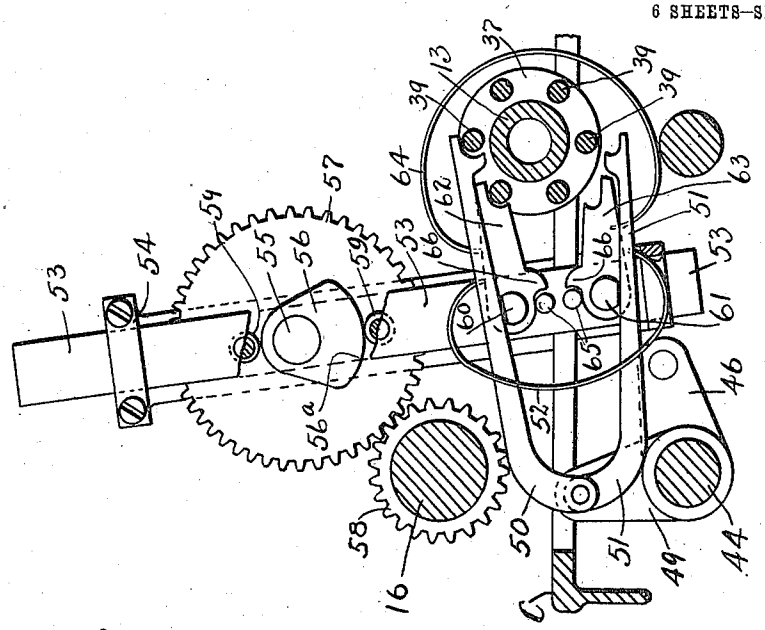

Fig. 3.

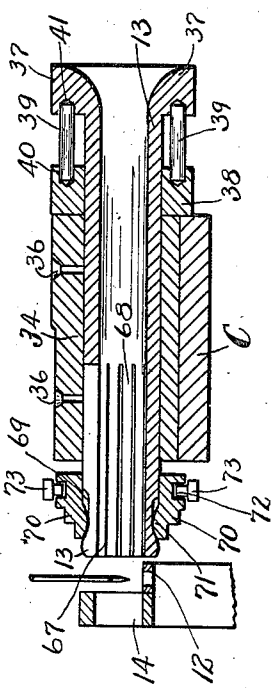

Fig. 5.

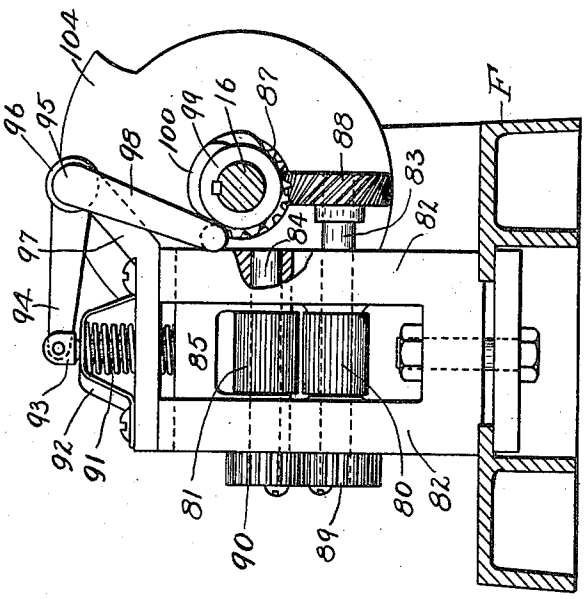

Witnesses,
Carrie R. Ivy
Wm Whaley

Inventor,
Ernest Koella
By Cyrus K. Ehr
Attorney.

COLUMBIA PLANOGRAPH CO., WASHINGTON, D. C.

E. KOELLA.

SEWING MACHINE.

APPLICATION FILED AUG. 5, 1909. RENEWED DEC. 26, 1912.

1,068,434.

Patented July 29, 1913.

6 SHEETS—SHEET 4.

Fig. 7.

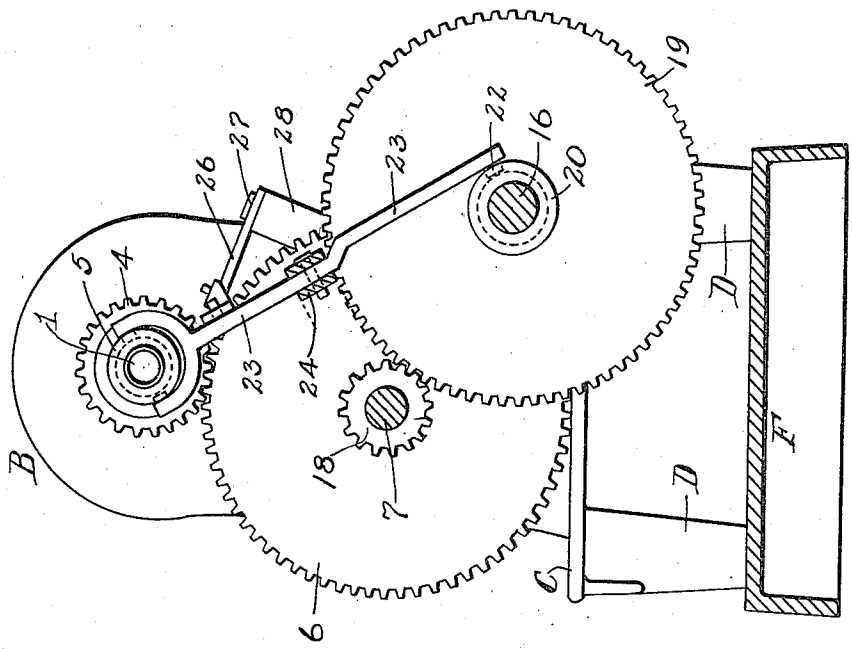

Fig. 6.

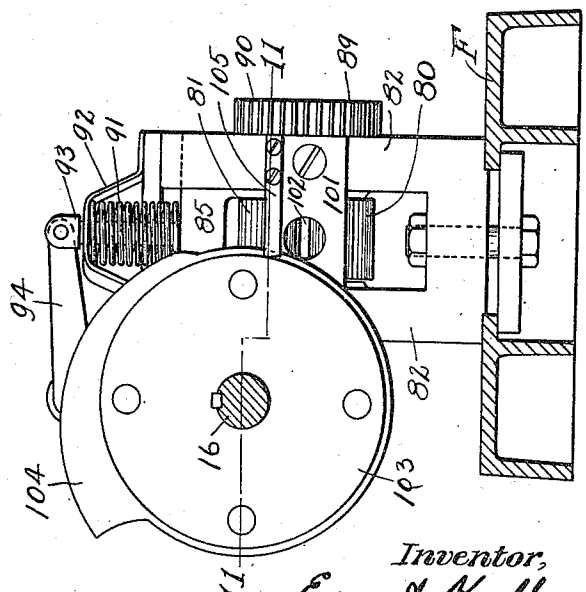

Witnesses,
Carrie P. Ivey
Wm. Whaley

Inventor,
Ernest Koella
By Cyrus Miller,
Attorney.

COLUMBIA PLANOGRAPH CO., WASHINGTON, D. C.

E. KOELLA.

SEWING MACHINE.

APPLICATION FILED AUG. 5, 1909. RENEWED DEC. 26, 1912.

1,068,434.

Patented July 29, 1913.

6 SHEETS—SHEET 5.

Fig. 9.

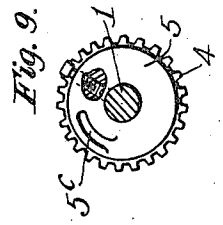

Fig. 8.

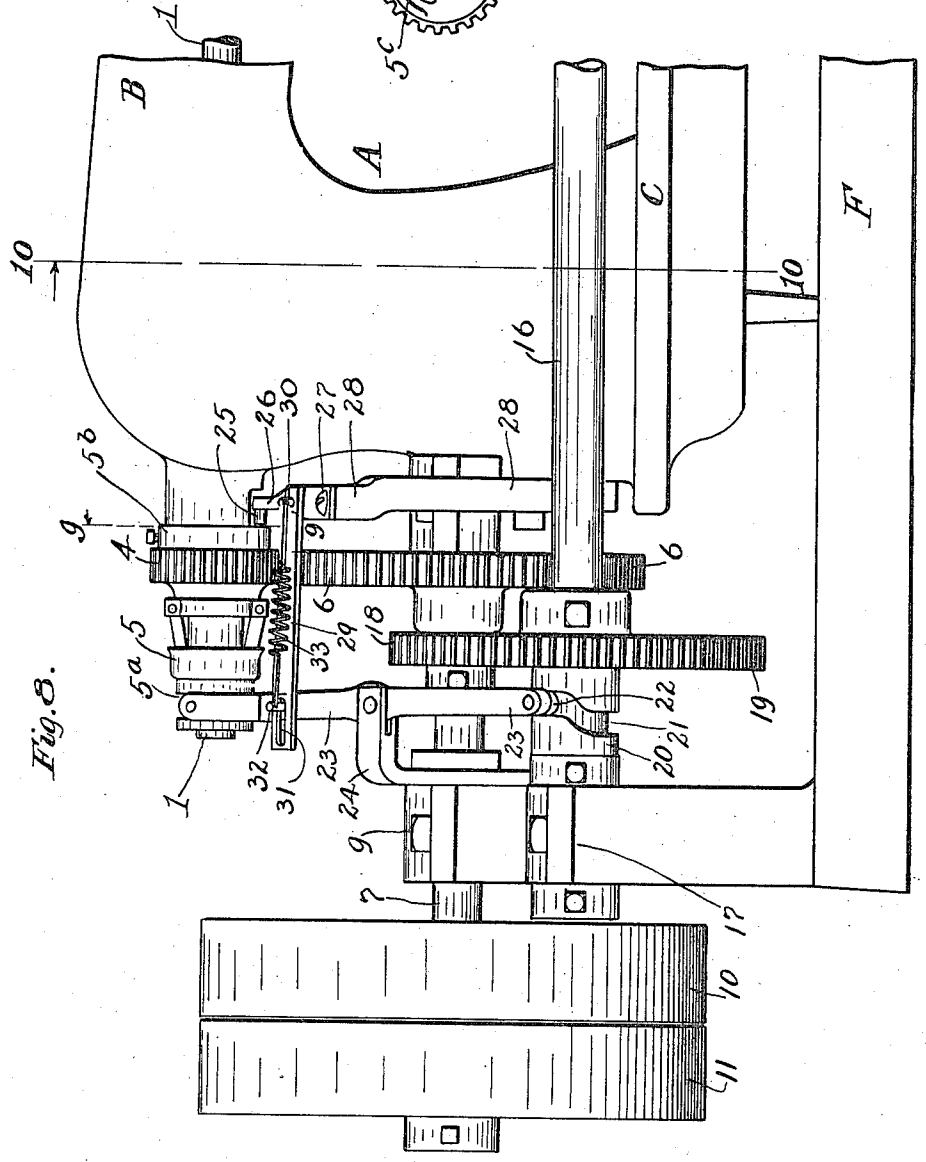

Witnesses,
Carrie R. Ivy.
Wm Whaley

Inventor,
Ernest Koella
By Cyrus Cole
Attorney.

COLUMBIA PLANOGRAPH CO., WASHINGTON, D. C.

E. KOELLA.

SEWING MACHINE.

APPLICATION FILED AUG. 5, 1909. RENEWED DEC. 26, 1912.

1,068,434. Patented July 29, 1913.

6 SHEETS—SHEET 6.

Fig. 11.

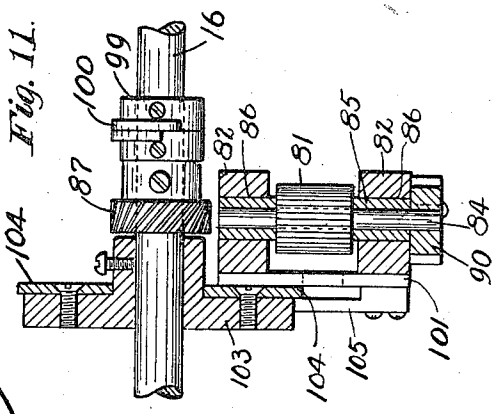

Fig. 12.

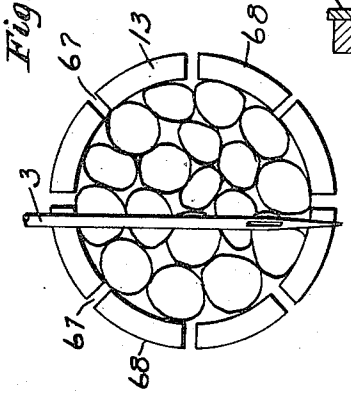

Fig. 10.

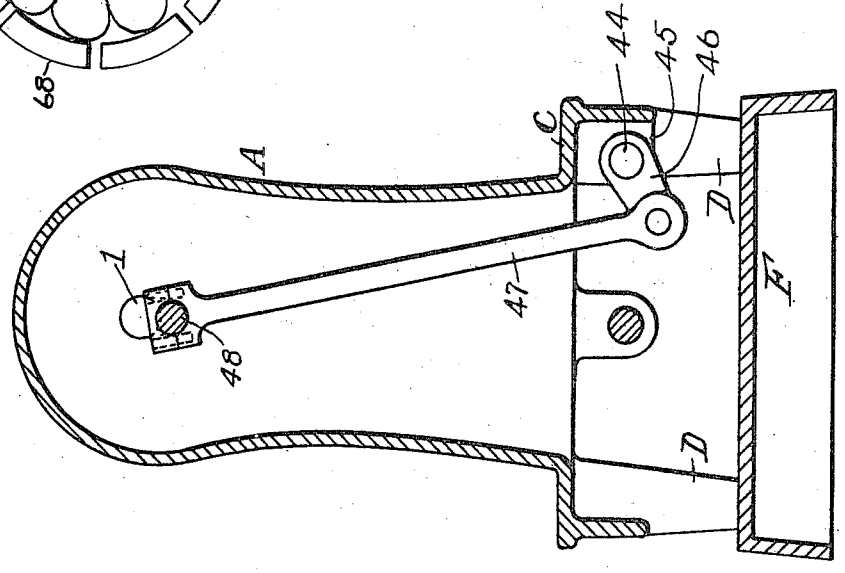

Witnesses,
Carrie R. Dry.
Wm. Whaley

Inventor,
Ernst Koella
By Cyrus Kehr
Attorney.

COLUMBIA PLANOGRAPH CO., WASHINGTON, D. C.

UNITED STATES PATENT OFFICE.

ERNEST KOELLA, OF KNOXVILLE, TENNESSEE.

SEWING-MACHINE.

1,068,434. Specification of Letters Patent. Patented July 29, 1913.

Application filed August 5, 1909, Serial No. 511,894. Renewed December 26, 1912. Serial No. 738,754.

To all whom it may concern:

Be it known that I, ERNEST KOELLA, a citizen of the United States, residing at Knoxville, in the county of Knox and State of Tennessee, have invented a new and useful Improvement in Sewing-Machines, of which the following is a specification, reference being had to the accompanying drawing.

My improvement relates particularly to machines for sewing material which is in the form of rope-like masses.

The chief object of the particular form in which my invention is shown embodied in the accompanying drawings is to sew transversely through a rope-like mass of parallel cords at intervals, the stitches extending through said mass at different angles perpendicular to the length of said mass, so that in the planes of such sewing the cords of which such rope-like mass is composed will be firmly joined to each other and will so remain after said cords have been cut transversely between such sewing planes, to form upholstering tufts, lamp wicks, and other similar articles. But the machine is adapted to other forms of sewing, with or without variation of the mechanism. As will hereinafter be explained, variation in the product may be made by varying the feed mechanism by means of which the material to be sewed is moved through the machine. In the preferred form for the particular work now in hand, such material is moved longitudinally through the machine and is also at intervals partially rotated with reference to its line of longitudinal movement, such rotation taking place step by step between the needle movements until ths sewing in a given transverse plane in the rope-like mass has been completed, and the entire mass being then given a longitudinal movement equal to the distance between two sewing planes.

In the accompanying drawings, Figure 1 is a front elevation of a machine embodying my improvement; Fig. 2 is a section on the line 2—2 of Fig. 1, looking downward; Fig. 3 is an upright section on the line 3—3 of Fig. 2; Fig. 4 is an upright section on the line 4—4 of Fig. 2, looking toward the right; Fig. 5 is a section on the line 5—5 of Fig. 1, looking toward the left; Fig. 6 is a section on the line 6—6 of Fig. 1, looking toward the right; Fig. 7 is a section on the line 7—7 of Fig. 1, looking toward the left; Fig. 8 is a rear elevation of the left hand portion of the machine as shown in Fig. 1; Fig. 9 is a section on the line 9—9 of Fig. 8, looking toward the left; Fig. 10 is a section on the line 10—10 of Fig. 8, looking toward the right; Fig. 11 is a horizontal section on the line 11—11 of Fig. 6; Fig. 12 is a transverse section at one of the sewing planes of the rope-like mass and showing the needle and the adjacent end of the rotary guide tube.

For convenience in description, the line in which the needle reciprocates is herein termed the "stitching line," and the rope-like mass upon which the sewing is done is herein termed the "rope," while the places on said rope at which the sewing is done are termed the "sewing stations" or "sewing planes." These stations or planes are to be separated from each other more or less, according to the articles to be made by the transverse severing of the rope after it has been sewed.

Referring to said drawings, A is an ordinary sewing head comprising the usual arm, B, and the usual base plate, C. Said base plate has feet, D, resting upon a foundation plate, F, and one or more bolts, E, rise from said foundation plate, F, through said base plate and serve to bind said sewing head to said foundation plate.

Extending through the arm, B, of the sewing head, A, is the usual horizontal rotary shaft, 1, for driving the upright, reciprocatory needle bar, 2, which bears at its lower end the needle, 3. The shaft, 1, is surrounded by a loose gear wheel, 4, adjacent which is a clutch, 5, rotating with said shaft and adapted to engage said gear wheel. Said gear wheel is rotated by a larger spur gear wheel, 6, which is rigid on a horizontal driving shaft, 7, resting in bearings, 8 and 9. On the outer end of said driving shaft are a fixed pulley, 10, and a loose pulley, 11. By means of a belt applied to said fixed pulley, the latter is rotated clockwise as viewed from the right in Fig. 1, whereby contra-clockwise movement is imparted to the gear wheel, 4, as viewed from the same direction. Adjacent the needle, 3, is the usual presser foot, 12, and beneath the needle and below the base plate, C, is a shuttle. The shuttle, needle, needle bar, and the parts directly associated therewith may be of any well known form, and I therefore deem it unnecessary to illustrate

and describe the same in detail. And, if so desired, the stitching mechanism may be of the chain-stitch form omitting the shuttle.

In lieu of the ordinary reciprocatory feed dog or plate located below and acting in conjunction with the yielding presser foot for feeding the sheet-form cloth or other material horizontally across the base plate, I use a horizontal guide tube, 13, one end of which is adjacent the needle (see Figs. 1, 2, and 3), and a fixed rope guide, 14, set axially in line with said tube at the opposite side of the needle, and a pair of opposing and constantly-rotating but intermittently-gripping feed rollers, 80 and 81, between which the axial line of said tube and said fixed guide, 14, passes. Said gripping rollers are normally forced together sufficiently to make engagement with the rope lying between them, and when the rope is to be held stationary, said rollers are forced from each other sufficiently to release the rope, as will be hereinafter described. And by mechanism to be hereinafter described, the guide tube, 13, is slightly rotated between strokes of the needle until said tube has been given approximately one-half of a rotation, so that stitches are taken transversely through the rope in the same plane at various angles. The means by which this rotation is effected will be hereinafter described. And it may be here stated that said tube is rotated in one direction after sewing in one plane or at one station on the rope and is rotated in the reverse direction while sewing in the next plane or at the next station, whereby the twist (a little more than one-half of a turn) given to the rope during the sewing at one station is undone during the sewing at the next station. And the needle line is a little at one side of the axis of said tube so that the needle will penetrate the rope a little at one side of the rope axis and the stitches will cross each other at diverse points in the sewing plane. (See Fig. 12.) In other words, the needle line is between the axis and the perimeter of the longitudinally extended space inclosed by the tubular guide, 13, so that the needle will, during each reciprocation, penetrate the rope issuing from said tubular guide at one side of the axis of the rope; or the path of the rope crosses the stitching line with the axis of the path at one side of said line.

Adjacent the path of the rope and following the gripping rollers, 80 and 81, opposite the needle is a mechanism for cutting the rope transversely during the periods between the longitudinal movements of the rope. Said cutting mechanism will be hereinafter described.

At the rear of the sewing head and parallel to the length thereof and a little above the base plate, C, is a horizontal line shaft, 16, having its ends in fixed bearings, 17. On the drive shaft, 7, between the bearing, 8, and the spur gear wheel, 6, is fixed a small spur gear wheel, 18, which meshes with a larger spur gear wheel, 19, fixed upon the line shaft, 16. Through these two spur gear wheels, the line shaft is made to rotate continuously with the driving shaft, 7, but at a lower speed and in the opposite direction.

Between the spur gear wheel, 19, and the adjacent bearing, 17, a cylindrical cam member, 20, surrounds and is fixed rigidly to the line shaft, 16. Said cam member has a cam groove, 21, in which rests an anti-friction roller, 22, on one end of the clutch lever, 23. The opposite end of said lever is engaged in the groove, 5^a, of the clutch, 5, on the shaft, 1, of the sewing head. Between its ends, said lever is pivoted to a fixed bracket, 24, (see Fig. 8). As will now be readily understood, the rotation of the line shaft, 16, will cause the oscillation of said clutch lever for the horizontal shifting of the clutch, 5, on the shaft, 1. The cam groove, 21, is so formed as to cause said lever to shift the clutch, 5, to engage the spur gear wheel, 4, at the time and during the interval desired for the operation of the needle bar. At the side of the spur gear wheel, 4, toward the sewing head, a collar or disk, 5^b, surrounds and is immovably secured to the shaft, 1, and forms an abutment against which the clutch, 5, presses said spur gear wheel between which and the clutch said gear wheel is clamped. In the face of said collar which is directed toward the sewing head is a recess, 5^c, adapted to receive a finger, 25, projecting toward said collar from one end of an arm, 26, the other end of which arm is hinged at 27 to the upper end of a fixed standard, 28. A horizontal bar or plate, 29, is hinged by one end to a stud, 30, on the arm, 26. The other end of said bar extends across the clutch lever, 23, and has a longitudinal slot, 31, through which rises a stud, 32, from the clutch lever, 23.

A contracting coiled spring, 33, extends from the stud, 30, to the stud, 32, and tends to pull the free end of the arm, 26, toward the collar, 5^b. But the bar, 29, by bearing against the stud, 32, limits the approach of the arm, 26, and the clutch lever, 23, toward each other. When the clutch lever moves away from the spur gear wheel, 4, the contracting spring, 33, draws the arm, 26, and the finger, 25, toward the collar, 5^b, and when said recess, 5^c, is opposite said finger, the latter enters said recess and locks said hub against rotation due to momentum of the shaft, 1, and the parts connected therewith, in order that the needle bar may stop promptly upon the release of the clutch, 5.

The guide tube, 13, rests in a long horizontal bearing, 34, secured on the base plate, C, by means of screws, 35. Oil holes, 36,

are formed in said bearing. The end of said tube which is the farther from the needle is expanded to form an annular head, 37, and the space within the tube is made flaring or funnel-form in said head. Between said head and the bearing, 34, and resting against the latter a collar, 38, surrounds the tube and is immovably fixed thereto. Between said collar and said head are six equi-distant horizontal rods or teeth, 39, to be engaged by pawls for the partial rotation of said tube. The ends of said rods extend into cavities, 40, in the collar, 38, and into cavities, 41, in the head, 37. Said collar holds the tube from movement toward the needle, and the opposite end of the tube being of no larger diameter than the bearing, the tube is held against movement through the bearing away from the needle by means of a hook-form bracket, 42, secured to the bearing, 34, by means of a screw, 43, and reaching across a portion of the free end face of said collar so as to hold the latter against movement away from said bearing, which obviously prevents the tube from moving in the same direction.

Beneath the rear portion of the base plate, C, and parallel to the line shaft, 16, is a horizontal rock shaft, 44, resting in bearings, 45. Beneath the upright portion of the sewing machine head, said rock shaft has a horizontal arm, 46, to which is coupled the lower end of a pitman rod, 47, the upper end of which is coupled to a crank, 48, on the needle bar shaft, 1. Opposite the head, 37, said rock shaft has an approximately upright arm, 49, to which are hinged an upper pawl, 50, and a lower pawl, 51, both of which are in a plane passing between the head, 37, and the collar, 38, and being adapted to engage the teeth, 39, and push against the latter when the arm, 49, is moved toward the tube, 13. A C-shape spring, 52, engages said pawls by its ends so as to draw said pawls toward each other and toward the tube, 13, and the teeth, 39. But said pawls are alternately held out of engagement with said teeth by means of the approximately upright shifting bar, 53. Said bar is supported slidably in a standard, 54, opposite the end of a shaft, 55, and a cam, 56, rigid upon said shaft. Said shaft has a bearing in said standard and surrounding said shaft is a spur gear wheel, 57, rigid on said shaft and meshing with a smaller spur gear wheel, 58, on the line shaft, 16. Through said gear wheels, 58 and 57, constant rotation is imparted to the cam, 56, from said line shaft. On the bar, 53, anti-friction rollers, 59, extend into the path of said cam, one of said rollers being located above and the other below the cam and near enough to the latter to cause substantially a constant engagement between said rollers and the cam. Thus said bar reciprocates lengthwise much the same as does a needle bar; but said cam has a concentric portion, 56^a, covering a sufficient arc to cause said bar to remain stationary during the time the needle is reciprocated. And it will be observed that the pawls, 50 and 51, reciprocate during the same portion of the drive shaft rotation that the needle bar reciprocates; for the needle bar and said pawls both receive motion from the needle bar shaft, and this shaft is given motion from the drive shaft during a portion of the rotation of the latter. But during such period of operation of said pawls and the needle bar, said pawls and said bar must reciprocate alternately; that is to say, when the needle bar rises far enough to disengage the needle from the rope, the pawls are pushed forward so that one of them will bear against a tooth, 39, and partially turn the guide tube while the needle is thus free. And when the needle again descends, said tube and the rope are again stationary. On the bar, 53, and between the pawls, 50 and 51, are two stops, 60 and 61, the first adapted to bear against the pawl, 50, and the second adapted to bear against the pawl, 51. The position of said stops is such as to hold the pawl, 51, away from the teeth, 39, when the bar, 53, is in its lower position and to hold the pawl, 50, away from said teeth when said bar is at its upper limit. Thus, while said pawls are reciprocated in unison by the rock shaft, 44, only one of said pawls will operate, and the direction of rotation of the guide tube, 13, is changed when the engagement of said pawls is reversed. And on the bar, 53, are two additional pawls, 62 and 63, 62 being adjacent the pawl, 50, and 63 adjacent the pawl, 51. The function of these pawls is to so engage the teeth, 39, as to prevent reversal of the guide tube while the adjacent pawl, 50 or 51, is being retracted after it has made a forward movement. A C-shape spring, 64, engages the pawls, 62 and 63, with its ends and tends to press said pawls toward each other and into the path of the teeth. But the movement of each of said pawls toward the other is limited by a stop, 65, set upon the bar, 53, in position to meet a shoulder, 66, on the adjacent pawl, 62 or 63, and the relative arrangement of the parts is such as to permit each of said pawls to turn far enough only to engage the teeth when the adjacent pawl, 50 or 51, is permitted to engage said teeth.

The discharge end of the guide tube, 13,—the end adjacent the needle—is provided with a number of radial slots, 67, leaving between them tongues or strips, 68, which may be pressed toward the axis of the tube until their edges meet, whereby the diameter of this end of the tube is materially reduced. And near this end, an annular groove, 69, having a bottom inclined in

cross section, is formed in the exterior of the tube. A clutch-like collar, 70, extends around said end of the tube and a portion, 71, thereof extends into the groove, 69. Said collar has in its exterior an annular groove, 72, which receives the arms, 73, of a clutch lever, 74. The opposite end of said lever bears an anti-friction roller, 75, resting in a groove, 76, of a cam member, 77, on the line shaft, 16. Between its ends said lever is hinged at 78 to a bracket, 79.

The groove, 76, in the cam member, 77, is so formed as to cause said lever to move the clutch-form collar, 70, toward the needle and presser foot during the portion of the rotation of the drive shaft, 7, which is occupied by the reciprocation of the needle bar and the step by step partial rotation of said guide tube. By thus shifting said collar, the tongues or strips, 68, are bent toward the tube axis and made to tightly grip the rope so as to compel rotation of the latter with said tube and so as to make said rope compact and maintain a definite position while the needle penetrates it for the stitching. And the groove, 76, is so formed as to cause the lever, 74, to promptly shift the collar, 70, in the opposite direction when the stitching has been completed, in order that the gripping of the rope may be sufficiently released to permit the rope to be drawn forward lengthwise through the tube by the feed rollers which will be next described.

For feeding the rope forward longitudinally through the guide tube, 13, periodically to bring new sewing planes or stations to the needle, a pair of horizontal superposed gripping rollers, 80 and 81, are placed at opposite sides of and transversely to the axial line of the guide tube, 13, and the rope is made to pass between said rollers. Said rollers are supported in two columns, 82, the shaft, 83, of the roller, 80, having bearings in said columns, while the shaft, 84, of the upper roller, 81, has bearings in a yoke, 85, movable up and down in upright slots, 86. The shaft, 83, takes power from the line shaft, 16, through spiral gears, 87 and 88. And the upper roller, 81, receives power from the lower roller, 80, through a spur gear, 89, on the shaft, 83, meshing with the spur gear, 90, on the shaft, 84. Since the line shaft, 16, rotates constantly, these feed rollers, 80 and 81, will rotate constantly. But they will feed the rope forward only when the upper roller, 81, is pressed downward sufficiently to cause the firm gripping of the rope between said rollers. The roller, 81, is pressed downward by pressing the yoke, 85, downward. This is accomplished by means of an upright expanding coiled spring, 91, having its lower end resting upon said yoke and having its upper end bearing against a bridge, 92. When the rope is not to be fed forward, the effect of said spring must be overcome and the yoke, 85, raised. For this purpose, an upright link, 93, is coupled by its lower end to the yoke and by its upper end to an arm, 94, on a rock shaft, 95, resting in a bearing, 96, supported by a bracket, 97, extending laterally from the columns, 82, to a point above the line shaft, 16. On the rock shaft, 95, is an arm, 98, extending downward between the shaft, 16, and the columns, 82, into the path of a cam member, 99, on the line shaft, 16, which has a cam face, 100, on a portion of its circumference adapted to press said arm laterally so as to cause the turning of the rock shaft, 95, for lifting the arm, 94, link, 93, and yoke, 85. Said cam face, 100, is so placed radially upon the line shaft, 16, and is of such length as to cause the lifting of said yoke and the feed roller, 81, during the operation of the needle. When the rope is drawn forward by said rollers, the thread, still attached at the sewing station, is drawn through the stitching mechanism and afterward cut when the rope is cut.

On the axial line of the guide tube and the fixed cord guide, a fixed cutting plate, 101, is applied to the columns, 82, at the side of the latter which is the farther from the needle. In said plate is a circular opening, 102, through which the rope passes after leaving the feed rollers, 80 and 81. Parallel and near to said cutting plate is a knife disk, 103, surrounding the line shaft, 16, and rigidly secured thereto. On said knife disk is a segmental and eccentric knife, 104, which bears closely and flatwise against the face of said cutting plate, 101. Said knife is so set upon the knife disk as to be clear of the cutting plate opening, 102, during the time the rope is fed forward by the feed rollers, and so as to gradually sweep across said opening during the time that the rope is not being fed forward—the period during which the stitching mechanism is working. The distance between the needle and said knife is made such as to cause the cutting to be done at the desired distance from the sewing stations or planes on the rope. For example, in the manufacture of upholstering tufts, the knife is so set as to cut the rope (and the sewing thread) midway between the sewing stations, whereby the loose ends of the yarn or cords are made of equal length at the opposite sides of the sewing station. But, if it be desired to have the loose ends of the cords or yarn longer at one side than at the other of the sewing station, the knife is set accordingly.

To aid in holding the cutting edge of the knife closely against the face of the cutting plate, an arm, 105, is supported on the cutting plate and extended toward the

knife disk far enough from the cutting plate to allow the knife to pass between said arm and the cutting plate without room for lateral play.

From the foregoing description, it will be seen that my improved machine is entirely automatic, automatically acting groups of mechanism being provided for each step of the work to be done. But, it will be understood, that some portions of this work may be done by means not automatic at all or only partially so. For example, the cutting mechanism may be omitted.

I claim as my invention:

1. In a sewing machine, the combination with a stitch-forming mechanism comprising a needle, of automatic mechanism for putting said stitch-forming mechanism into and out of action, mechanism for moving a rope longitudinally, a continuously operating part and connections between said part and the rope-moving mechanism for moving the rope longitudinally while the stitch-forming mechanism is out of action, substantially as described.

2. In a sewing machine, the combination with a stitch-forming mechanism comprising a needle, of mechanism for putting the stitch-forming mechanism into and out of action, mechanism for moving a rope longitudinally, a continuously operating part and connections between said part and the rope-moving mechanism for moving the rope longitudinally while the stitch-forming mechanism is out of action, and mechanism for partially rotating said rope between stitches, substantially as described.

3. In a sewing machine, the combination with a stitch-forming mechanism comprising a needle, of mechanism for putting the stitch-forming mechanism into and out of action, mechanism for moving a rope longitudinally, a continuously operating part and connections between said part and the rope-moving mechanism for moving the rope longitudinally while the stitch-forming mechanism is out of action, and mechanism for partially rotating such rope between stitches, the direction of such partial rotation being automatically reversed after each longitudinal movement of the rope, substantially as described.

4. In a sewing machine, the combination with the stitching mechanism comprising a needle, of automatic means for moving a rope lengthwise through the stitching line, automatic means for actuating the stitching mechanism, and means for partially rotating the rope between stitches, substantially as described.

5. In a sewing machine, the combination with the stitching mechanism comprising a needle, of automatic means for moving a rope lengthwise through the stitching line, automatic means for actuating the stitching mechanism, and automatic means for partially rotating the rope between stitches, such rotation being in one direction during one period and in another direction during another period, substantially as described.

6. In a sewing machine, the combination with the stitching mechanism comprising a needle, of automatic means for periodically putting the stitching mechanism into and out of action, automatic means for moving the material in one direction while the stitching mechanism is in action and in another direction while the stitching mechanism is out of action, substantially as described.

7. In a sewing machine, the combination with the stitching mechanism comprising a needle, of means for periodically putting the stitching mechanism into and out of action, means for confining a rope transversely in the stitching line with the path of the rope crossing said line with its axis at one side of said line, and moving said rope longitudinally while the stitching mechanism is out of action, substantially as described.

8. In a sewing machine, the combination with the stitching mechanism comprising a needle, of mechanism for periodically putting the stitching mechanism into and out of action, mechanism for confining a rope transversely and in the stitching line with its axis at one side of said line and moving said rope longitudinally while the stitching mechanism is out of action and partially rotating said rope between stitches, such longitudinal movement, partial rotation and actuation of the stitching mechanism being in due sequence, substantially as described.

9. In a sewing machine, the combination with the stitching mechanism comprising a needle, of mechanism for periodically putting the stitching mechanism into and out of action, mechanism for confining a rope transversely and in the stitching line with its axis at one side of said line and moving said rope longitudinally while the stitching mechanism is out of action and partially rotating said rope between stitches, the direction of such partial rotation being reversed after each longitudinal movement of the rope, such longitudinal movement, partial rotation and actuation of the stitching mechanism being in due sequence, substantially as described.

10. In a sewing machine, the combination with the stitching mechanism comprising a needle, of mechanism for moving a rope lengthwise across the stitching line with its axis at one side of said line and partially rotating the rope between stitches, and mechanism for actuating the stitching mechanism, such longitudinal movement, partial rotation and actuation of the stitching mecha-

nism being in due sequence, substantially as described.

11. In a sewing machine, the combination with the stitching mechanism comprising a needle, of mechanism for moving a rope lengthwise across the stitching line with its axis at one side of said line and partially rotating the rope between stitches, first in one direction and then in the other, and mechanism for actuating the stitching mechanism, such longitudinal movement, partial rotation and actuation of the stitching mechanism being in due sequence, substantially as described.

12. In a sewing machine, the combination with the stitching mechanism comprising a needle, of means for periodically putting the stitching mechanism into and out of action, means for holding a rope transversely in the stitching line and moving said rope longitudinally while the stitching mechanism is out of action, and mechanism for transversely severing said rope, substantially as described.

13. In a sewing machine, the combination with the stitching mechanism comprising a needle, of means for periodically putting the stitching mechanism into and out of action, means for holding a rope transversely in the stitching line and moving said rope longitudinally while the stitching mechanism is out of action, automatic means for partially rotating said rope between stitches, and mechanism for transversely severing said rope, substantially as described.

14. In a sewing machine, the combination with the stitching mechanism comprising a needle, of means for periodically putting the stitching mechanism into and out of action, means for holding a rope transversely in the stitching line and moving said rope longitudinally while the stitching mechanism is out of action, automatic means for partially rotating said rope between stitches, the direction of such partial rotation being reversed after each longitudinal movement of the rope, and mechanism for transversely severing said rope, substantially as described.

15. In a sewing machine, the combination with the stitching mechanism comprising a needle, of means for moving a rope lengthwise through the stitching line, means for actuating the stitching mechanism, automatic means for partially rotating the rope between stitches, and mechanism for transversely severing said rope, substantially as described.

16. In a sewing machine, the combination with the stitching mechanism comprising a needle, of means for moving a rope lengthwise through the stitching line, means for actuating the stitching mechanism, automatic means for partially rotating the rope between stitches, such rotation being in one direction during one period and in another direction during another period, and mechanism for transversely severing said rope, substantially as described.

17. In a sewing machine, the combination with the stitching mechanism comprising a needle, of means for periodically putting the stitching mechanism into and out of action, means for holding a rope transversely in the stitching line without longitudinal movement while the stitching mechanism is in action and moving said rope longitudinally while the stitching mechanism is out of action, and severing mechanism timed to sever said rope transversely between the stitching planes while the stitching mechanism is in action and during the intervals between longitudinal movements of the rope, substantially as described.

18. In a sewing machine, the combination with the stitching mechanism comprising a needle, of means for periodically putting the stitching mechanism into and out of action, means for holding a rope transversely in the stitching line and moving said rope longitudinally while the stitching mechanism is out of action, automatic means for partially rotating said rope between stitches, and severing mechanism timed to sever said rope transversely between the stitching planes while the stitching mechanism is in action and during the intervals between longitudinal movements of the rope, substantially as described.

19. In a sewing machine, the combination with the stitching mechanism comprising a needle, of means for periodically putting the stitching mechanism into and out of action, means for holding a rope transversely in the stitching line and moving said rope longitudinally while the stitching mechanism is out of action, automatic means for partially rotating said rope between stitches, the direction of such partial rotation being reversed after each longitudinal movement of the rope, and severing mechanism timed to sever said rope transversely between the stitching planes while the stitching mechanism is in action and during the intervals between longitudinal movements of the rope, substantially as described.

20. In a sewing machine, the combination with the stitching mechanism comprising a needle, of means for moving a rope lengthwise through the stitching line, means for actuating the stitching mechanism, automatic means for partially rotating the rope between stitches, and severing mechanism timed to sever said rope transversely between the stitching planes while the stitching mechanism is in action and during the intervals between longitudinal movements of the rope, substantially as described.

21. In a sewing machine, the combination with the stitching mechanism comprising a needle, of means for moving a rope length-

wise through the stitching line, means for actuating the stitching mechanism, automatic means for partially rotating the rope between stitches, such rotation being in one direction during one period and in another direction during another period, and severing mechanism timed to sever said rope transversely between the stitching planes while the stitching mechanism is in action and during the intervals between longitudinal movements of the rope, substantially as described.

22. In a sewing machine, the combination with the stitching mechanism comprising a needle, of a contractible tubular guide adjacent the needle, and means for periodically drawing the material lengthwise through said tubular guide, and means for contracting said tubular guide during the intervals between such lengthwise movement of the material, substantially as described.

23. In a sewing machine, the combination with the stitching mechanism comprising a needle, of a tubular guide adjacent the needle, automatic means for rotating said tubular guide, and means for periodically drawing material lengthwise through said guide, said rotating means and said drawing means acting alternately, substantially as described.

24. In a sewing machine, the combination with the stitching mechanism comprising a needle, of a contractible tubular guide adjacent the needle, and means for periodically contracting and rotating said tubular guide, and means for periodically drawing material lengthwise through said guide, said contracting and rotating means, on the one hand, and said drawing means, on the other hand, acting alternately, substantially as described.

25. In a sewing machine, the combination with the stitching mechanism comprising a needle, of a tubular guide the longitudinally extended interior space of which crosses the stitching line with the axis of said space at one side of the stitching line, and means for drawing material through said tubular guide, said guide being supported and having movement independently of said drawing means, substantially as described.

26. In a sewing machine, the combination with the stitching mechanism comprising a needle, of a contractible tubular guide adjacent the needle and having its axis at one side of the stitching line, means for periodically drawing the material lengthwise through said tubular guide, and means for contracting said tubular guide during the intervals between such lengthwise movement of the material, substantially as described.

27. In a sewing machine, the combination with the stitching mechanism comprising a needle, of a tubular guide adjacent the needle and the longitudinally extended interior space of which crosses the stitching line with the axis of said space at one side of the stitching line, means for rotating said tubular guide, and means for periodically drawing material lengthwise through said guide, said rotating means and said drawing means acting alternately, substantially as described.

28. In a sewing machine, the combination with the stitching mechanism comprising a needle, of a contractible tubular guide adjacent the needle and having its axis at one side of the stitching line, means for periodically contracting and rotating said tubular guide, and means for periodically drawing material lengthwise through said guide, said contracting and rotating means, on the one hand, and said drawing means, on the other hand, acting alternately, substantially as described.

29. In a sewing machine, the combination with the stitching mechanism comprising a needle, of a contractible tubular guide adjacent the needle, means for periodically drawing the material lengthwise through said tubular guide, means for contracting said tubular guide during the intervals between such lengthwise movement of the material, and mechanism for transversely severing the sewed material, substantially as described.

30. In a sewing machine, the combination with the stitching mechanism comprising a needle, of a tubular guide adjacent the needle, means for rotating said tubular guide, means for periodically drawing material lengthwise through said guide, said rotating means and said drawing means acting alternately, and mechanism for transversely severing the sewed material, substantially as described.

31. In a sewing machine, the combination with the stitching mechanism comprising a needle, of a contractible tubular guide adjacent the needle, and means for periodically contracting and rotating said tubular guide, means for periodically drawing material lengthwise through said guide, said contracting and rotating means, on the one hand, and said drawing means, on the other hand, acting alternately, and mechanism for transversely severing the sewed material, substantially as described.

32. In a sewing machine, the combination with the stitching mechanism comprising a needle, of a tubular guide the longitudinally extended interior space of which crosses the stitching line with the axis of said space at one side of the stitching line, means for drawing material through said tubular guide, and mechanism for transversely severing the sewed material, substantially as described.

33. In a sewing machine, the combination with the stitching mechanism comprising a needle, of a contractible tubular guide adjacent the needle and having its axis at one side of the stitching line, means for periodi-

cally drawing the material lengthwise through said tubular guide, means for contracting said tubular guide during the intervals between such lengthwise movement of the material, and mechanism for transversely severing the sewed material, substantially as described.

34. In a sewing machine, the combination with the stitching mechanism comprising a needle, of a tubular guide adjacent the needle and having its axis at one side of the stitching line, means for rotating said tubular guide, means for periodically drawing material lengthwise through said guide, said rotating means and said drawing means acting alternately, and mechanism for transversely severing the sewed material, substantially as described.

35. In a sewing machine, the combination with the stitching mechanism comprising a needle, of a contractible tubular guide adjacent the needle and having its axis at one side of the stitching line, means for periodically contracting and rotating said tubular guide, means for periodically drawing material lengthwise through said guide, said contracting and rotating means, on the one hand, and said drawing means, on the other hand, acting alternately, and mechanism for transversely severing the sewed material, substantially as described.

In testimony whereof I have signed my name, in presence of two witnesses, this 3rd day of August, in the year one thousand nine hundred and nine.

ERNEST KOELLA.

Witnesses:
CYRUS KEHR,
C. A. MORSE.

Copies of this patent may be obtained for five cents each, by addressing the "Commissioner of Patents, Washington, D. C."