(No Model.)

W. H. CARR.

BURGLAR PROOF SAFE.

No. 490,869. Patented Jan. 31, 1893.

FIG. 1

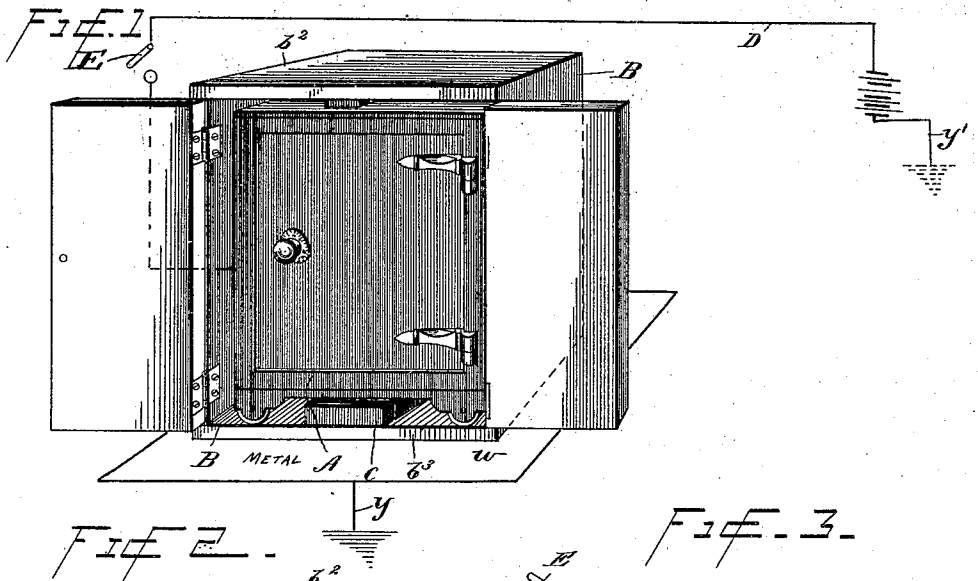

FIG. 2.

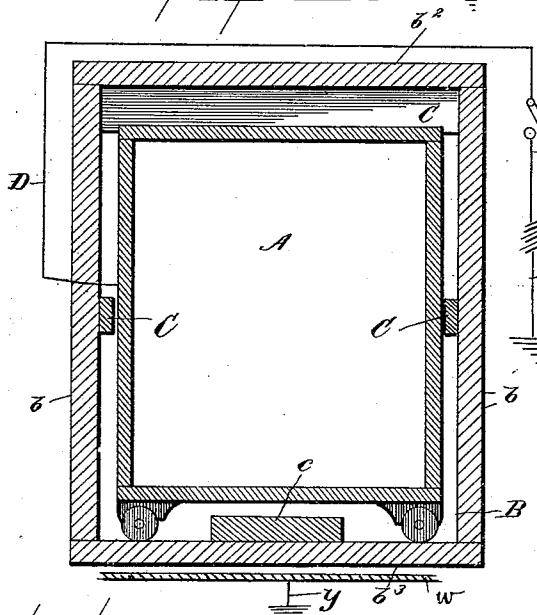

FIG. 3.

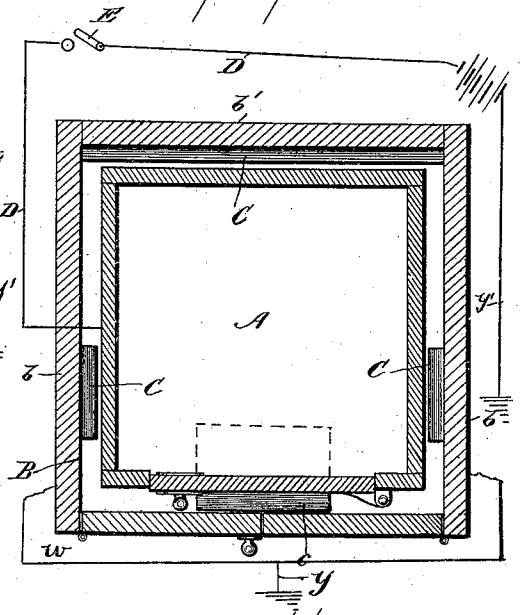

WITNESSES.

A. A. Erb.

M. J. McMahon

INVENTOR.

Warren H. Carr,

by his Attorney

J. R. Littell

THE NORRIS PETERS CO., PHOTO-LITHO., WASHINGTON, D. C.

UNITED STATES PATENT OFFICE.

WARREN H. CARR, OF BATH, MAINE.

BURGLAR-PROOF SAFE.

SPECIFICATION forming part of Letters Patent No. 490,869, dated January 31, 1893.

Application filed May 14, 1892. Serial No. 432,978. (No model.)

To all whom it may concern:

Be it known that I, WARREN H. CARR, a citizen of the United States, residing at Bath, in the county of Sagadahoc and State of Maine, have invented certain new and useful Improvements in Burglar-Proof Safes; and I do hereby declare that the following is a full, clear, and exact description of the invention, which will enable others skilled in the art to which it appertains to make and use the same.

This invention relates to safes or vaults, and it has for its object to provide means for charging the same with electricity whereby they will be rendered burglar proof and yet be accessible to proper parties.

A further object of the invention is to provide a casing of non-conducting material for the safe or vault, designed to entirely inclose the latter and obviate accident.

In the drawings—Figure 1 is a perspective view illustrating my invention. Fig. 2 is a vertical sectional view. Fig. 3 is a transverse sectional view the connections being diagrammatically and conventionally shown.

Corresponding parts in the figures are denoted by the same letters of reference.

Referring to the drawings, A designates a safe, which may be of any well-known or approved pattern, and insulated by being entirely inclosed within a casing, B, of wood or other non-conducting material. The casing B is preferably of the same shape as the safe, but of larger interior dimensions than the exterior dimensions of the safe. It comprises the vertical sides b, b, and back, b', the horizontal top, b^2, and bottom, b^3, and the doors, B' B', the latter being hinged at the front of the casing. Within the casing, the sides b, the back b' and the top b^2 are each provided with one or more blocks or projections, C, which abut against the respective surfaces of the safe and retain the same from contact with the casing. A space is thus formed entirely surrounding the safe. A block, c, is provided at the front edge of bottom b^3, which serves as a stop for the doors.

For charging the safe, current wires, D D, are placed in communication therewith at any desired point, said wires leading to a source of electric power. It will be obvious that this may be accomplished in various ways; by connection with the street electric light wires, dynamo, storage battery or in any other way in which a current of sufficient resistance can be derived to effect the desired end. One of the wires D is interrupted by a switch, E, designed for breaking the circuit to permit of access to the safe by authorized parties. The switch is placed at any convenient point within the apartment containing the safe, within a desk or in some concealed place.

As shown in Fig. 1, running entirely around the safe, but not in contact therewith, is a rectangular metal strip, w, secured to the floor and grounded by a ground wire, y, corresponding to battery-ground y'. This strip is of sufficient width and is so placed that a person must stand thereon in order to have access to the safe. Thus, should the safe be touched by any one standing on the metal strip the metallic circuit D will be closed and a ground established through the person, metal strip w and the ground wire y.

The operation and advantages of my invention will be readily understood by those skilled in the art to which it appertains. The switch being normally closed, the safe is charged with an electric current of such power as to resist access to the safe in any way by unauthorized persons. When access is to be had by the proper parties, the switch is operated to break the current. The safe can then be opened and handled without shock or danger. The casing serves to prevent accidental shock by precluding contact with the safe except through the doors at the front of the casing. While I have herein shown and described one manner of carrying out my invention, I do not wish to be understood as limiting myself to this precise means, as numerous modifications may be made without departing from the spirit and scope of my invention.

I claim as my invention—

1. The combination, with a safe or vault, and means for charging the same with electricity, of a non-conducting casing inclosing the safe or vault and a ground contact-strip around the safe but disconnected from the same and included in the electric circuit, whereby a person standing upon said strip and touching the insulating casing is protected from the current; substantially as and for the purpose set forth.

2. The combination, with a safe or vault,

and means for charging the same with electricity, and a ground contact strip around the base of the safe, insulated therefrom and included in an electric circuit, of a non-conducting casing inclosing the safe or vault and provided interiorly upon its sides, back and top with blocks or projections, and doors inclosing the front of said casing; substantially as and for the purpose set forth.

3. The combination, with a safe included in an electric circuit, of a normally open electric circuit fed by a suitable source of electricity, a circuit controller for said circuit, and a contact strip around the safe yet not electrically connected therewith but included in the electric circuit, whereby a person standing upon said strip and touching the safe completes the circuit from the safe to the strip through the body.

In testimony whereof I affix my signature in presence of two witnesses.

W. H. CARR.

Witnesses:
W. D. MUSSENDENY,
W. R. CAMPBELL.