E. M. SCHANTZ.

COMPUTING RECORDING SCALE.

APPLICATION FILED MAR. 14, 1916.

1,299,786.

Patented Apr. 8, 1919.

8 SHEETS—SHEET 1.

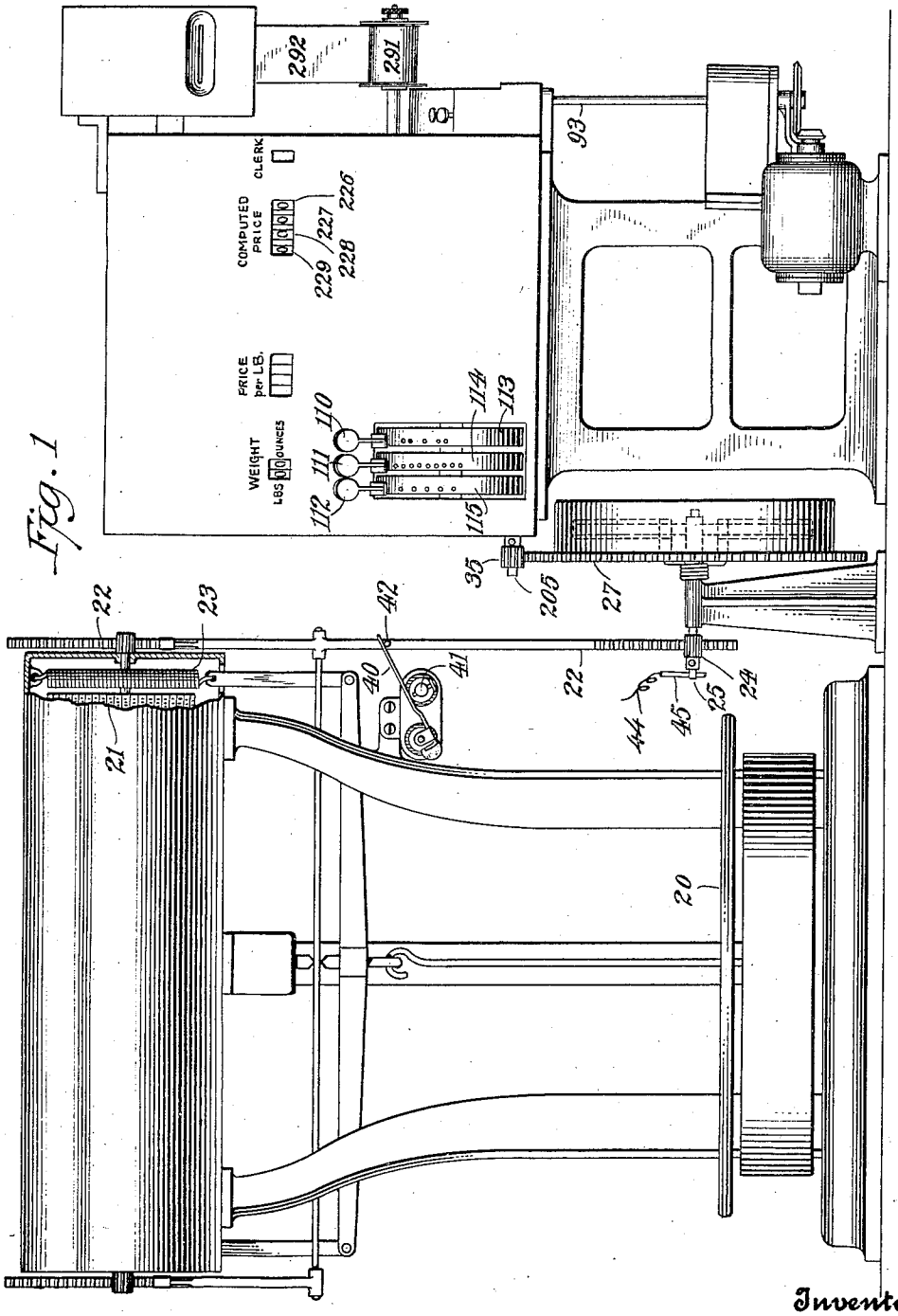

Fig. 1

Inventor

EDWIN M. SCHANTZ

By his Attorneys

Kerr Page Cooper & Hayward

E. M. SCHANTZ.

COMPUTING RECORDING SCALE.

APPLICATION FILED MAR. 14, 1916.

1,299,786.

Patented Apr. 8, 1919.

8 SHEETS—SHEET 2.

Fig. 2

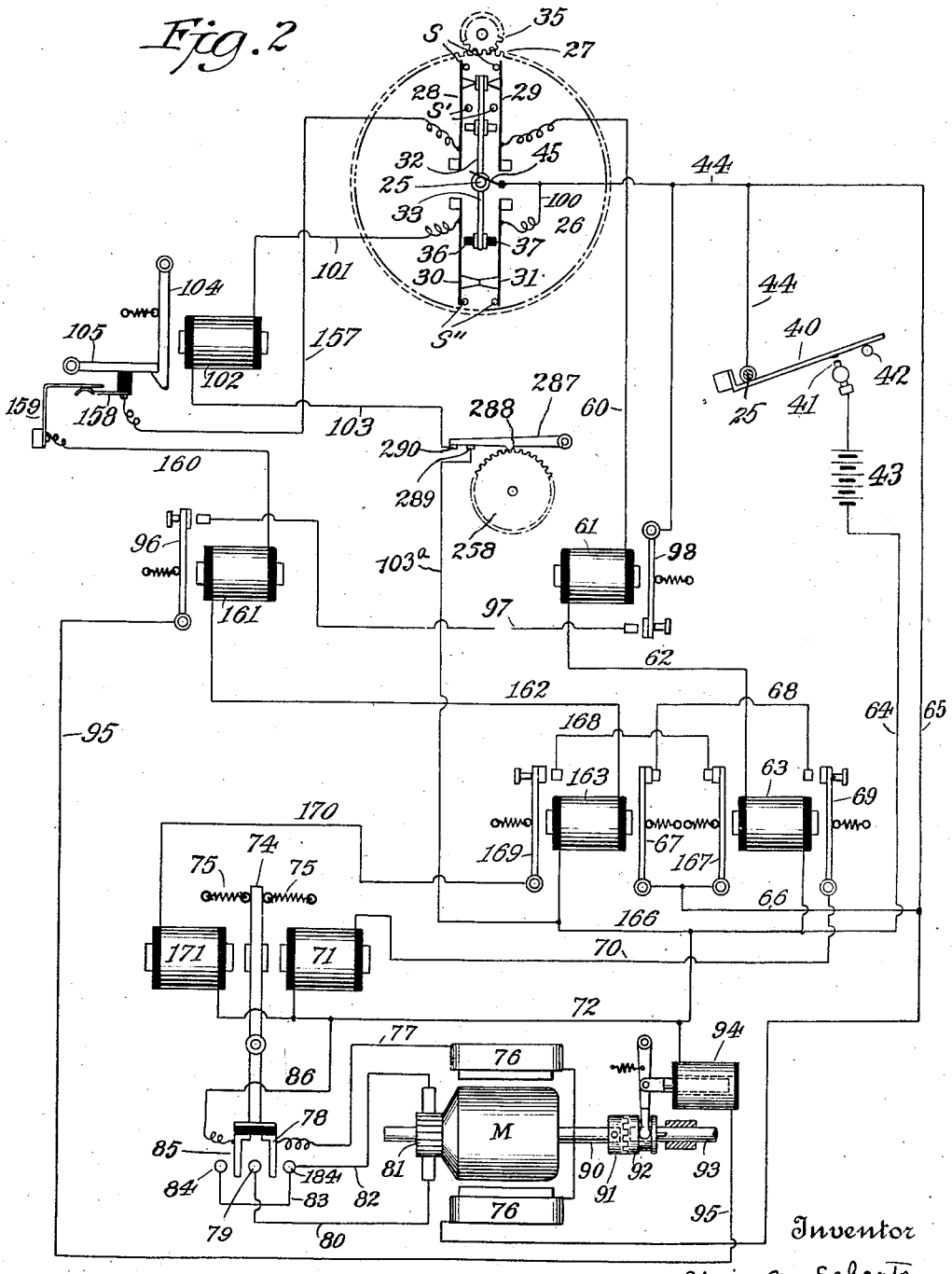

Inventor

Edwin M Schantz

By his Attorneys

Kerr Page Cooper & Hayward

E. M. SCHANTZ.

COMPUTING RECORDING SCALE.

APPLICATION FILED MAR. 14, 1916.

1,299,786.

Patented Apr. 8, 1919.

8 SHEETS—SHEET 3.

FIG. 4.

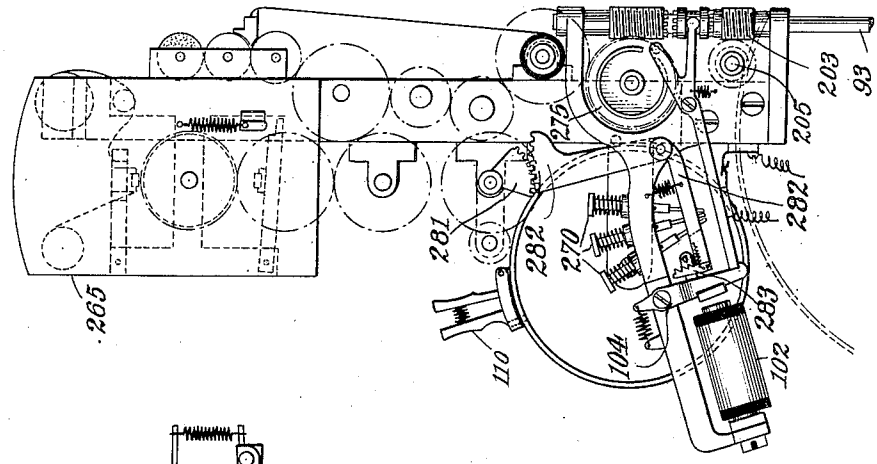

FIG. 3.

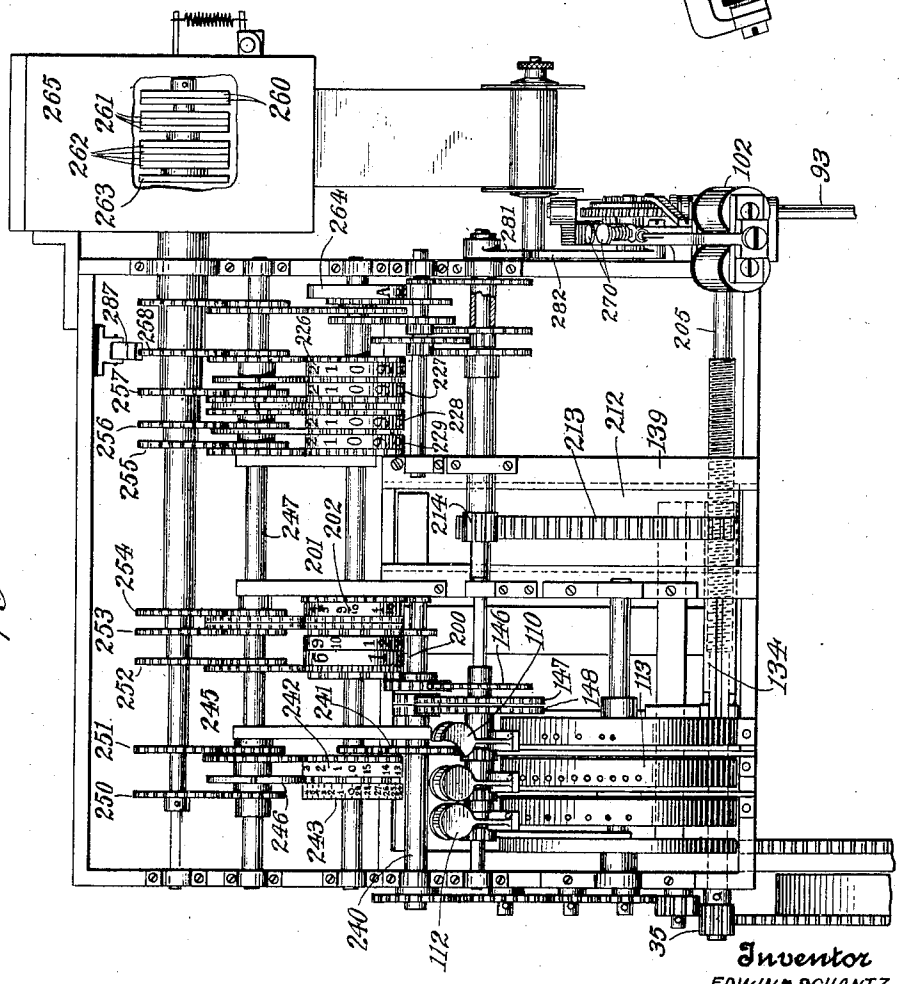

Inventor

EDWIN M. SCHANTZ

By his Attorneys

Kerr Page Cooper & Hayward

E. M. SCHANTZ.

COMPUTING RECORDING SCALE.

APPLICATION FILED MAR. 14, 1916.

1,299,786.

Patented Apr. 8, 1919.

8 SHEETS—SHEET 4.

Fig. 13

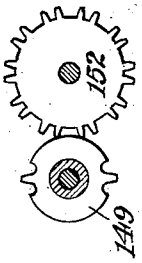

Fig. 6

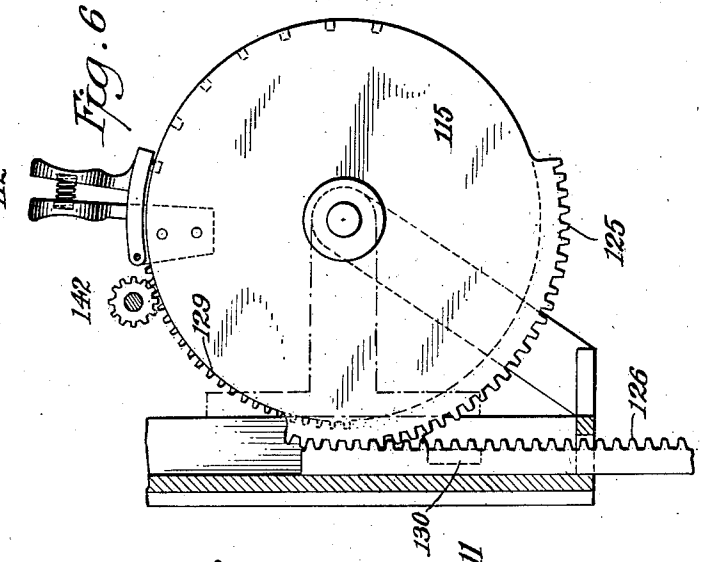

Fig. 5

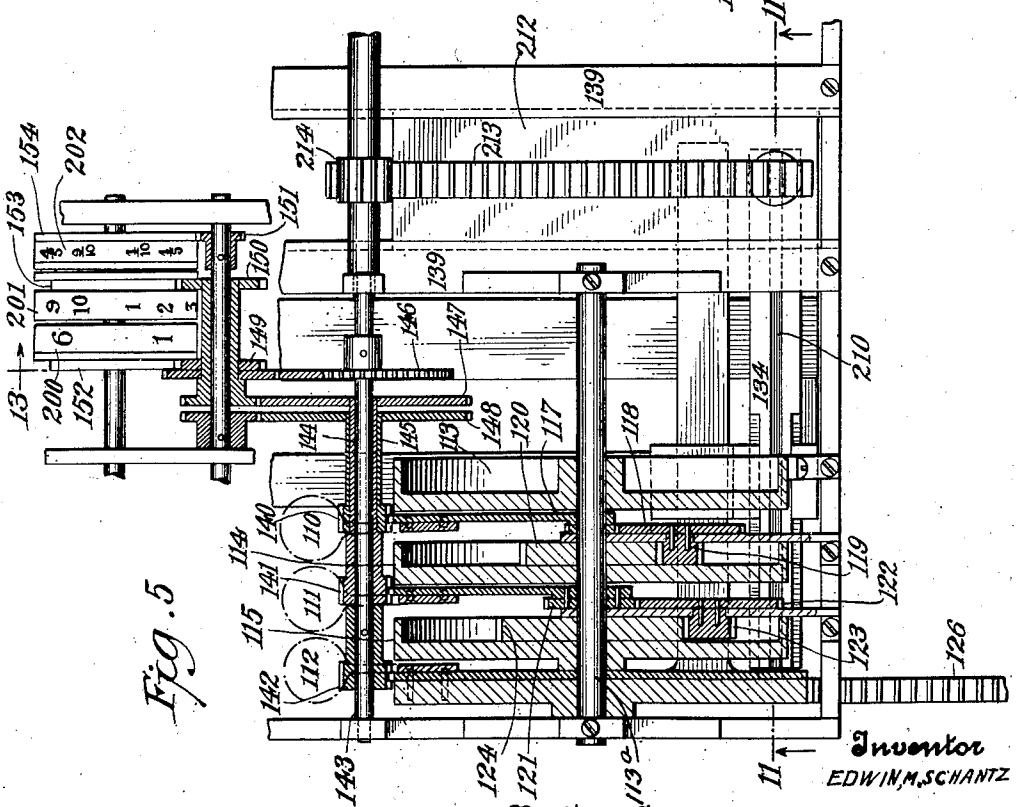

Inventor

EDWIN M. SCHANTZ

By his Attorneys

Kerr Page Cooper & Hayward

E. M. SCHANTZ.

COMPUTING RECORDING SCALE.

APPLICATION FILED MAR. 14, 1916.

1,299,786.

Patented Apr. 8, 1919.

8 SHEETS—SHEET 5.

Fig. 7.

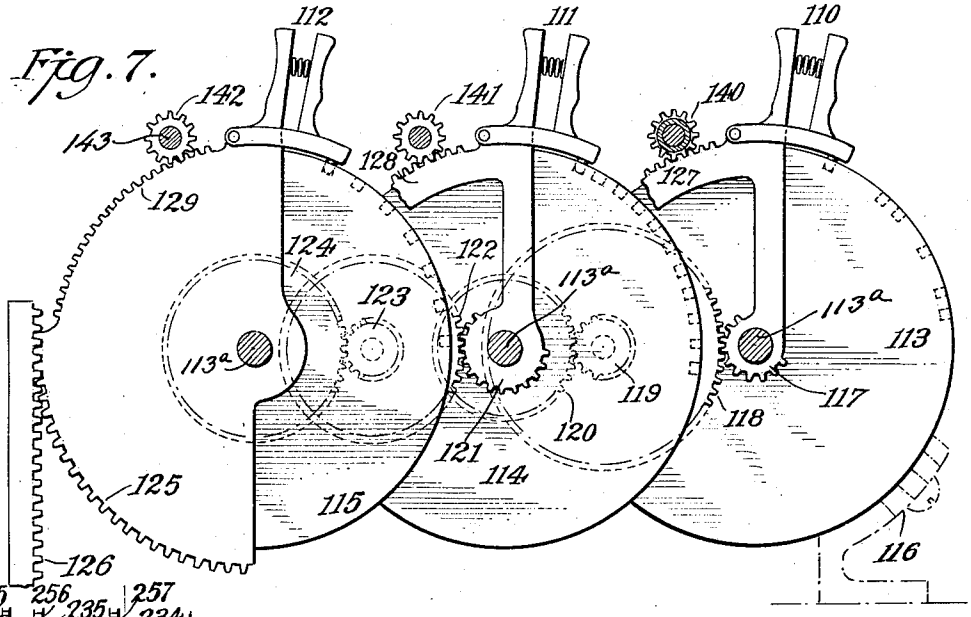

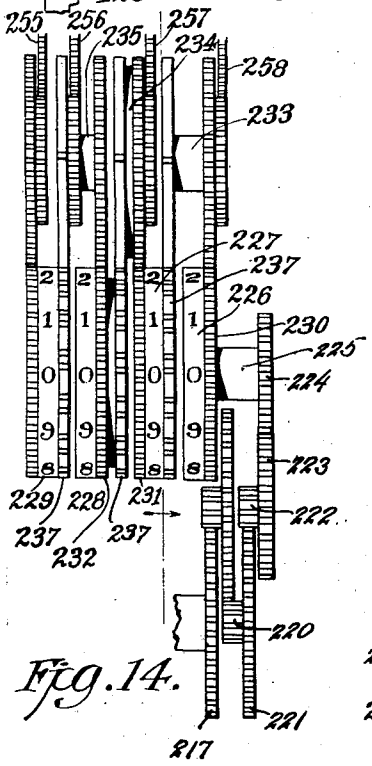

Fig. 14.

Fig. 12.

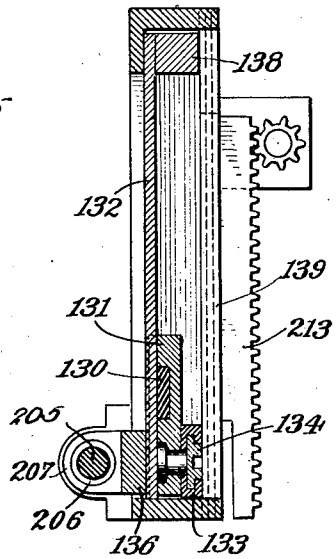

Fig. 15.

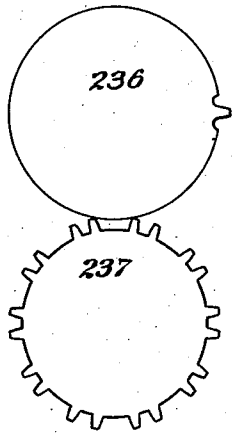

Inventor

EDWIN M. SCHANTZ

By his Attorneys

Kerr Page Cooper & Hayward

E. M. SCHANTZ.

COMPUTING RECORDING SCALE.

APPLICATION FILED MAR. 14, 1916.

1,299,786.

Patented Apr. 8, 1919.

8 SHEETS—SHEET 6.

Fig. 11

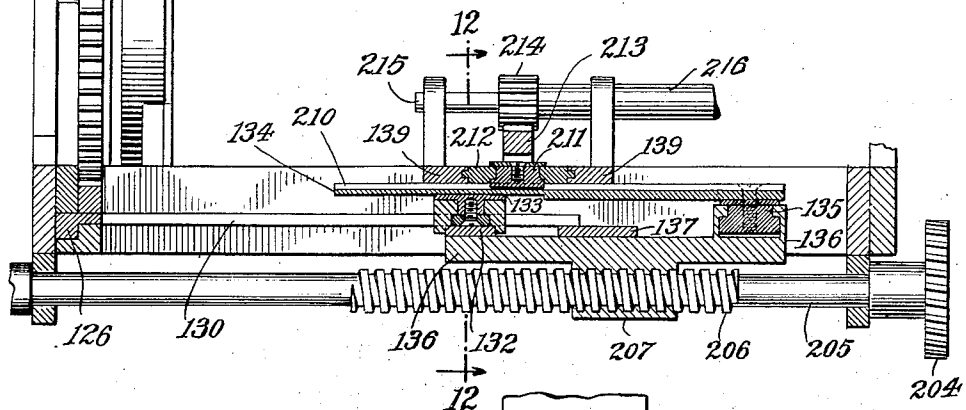

Fig. 8

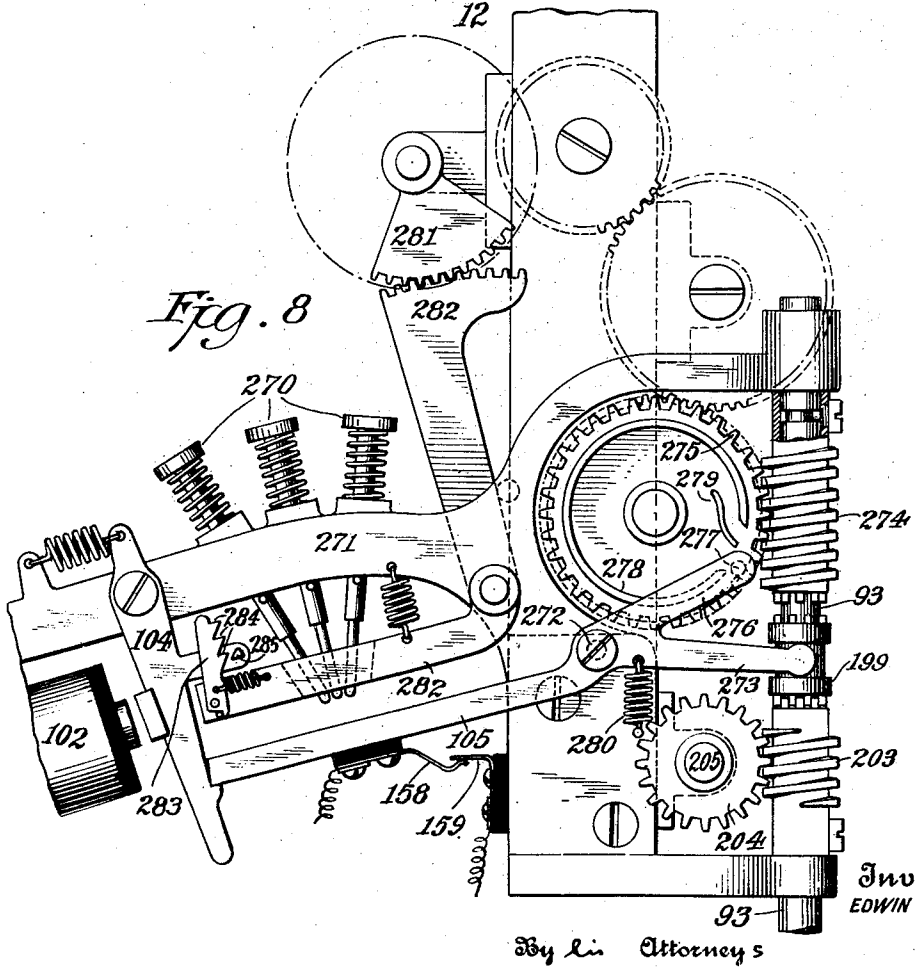

Inventor
EDWIN M. SCHANTZ

By his Attorneys
Kerr Page Cooper & Hayward

E. M. SCHANTZ.

COMPUTING RECORDING SCALE.

APPLICATION FILED MAR. 14, 1916.

1,299,786.

Patented Apr. 8, 1919.

8 SHEETS—SHEET 7.

Fig. 9

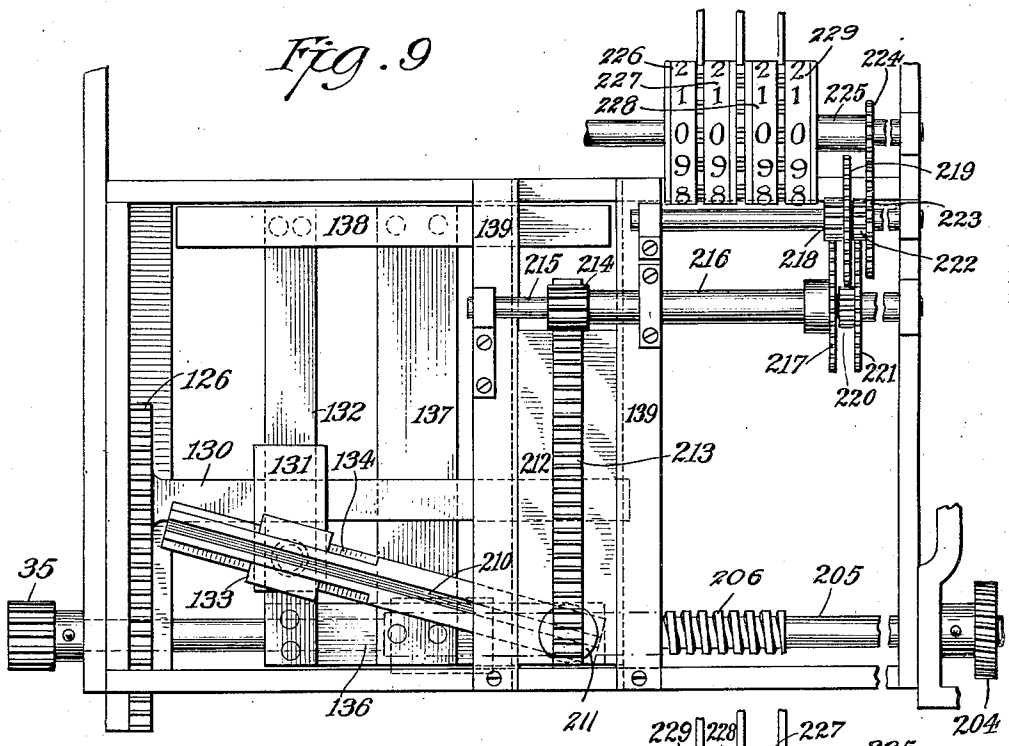

Fig. 10

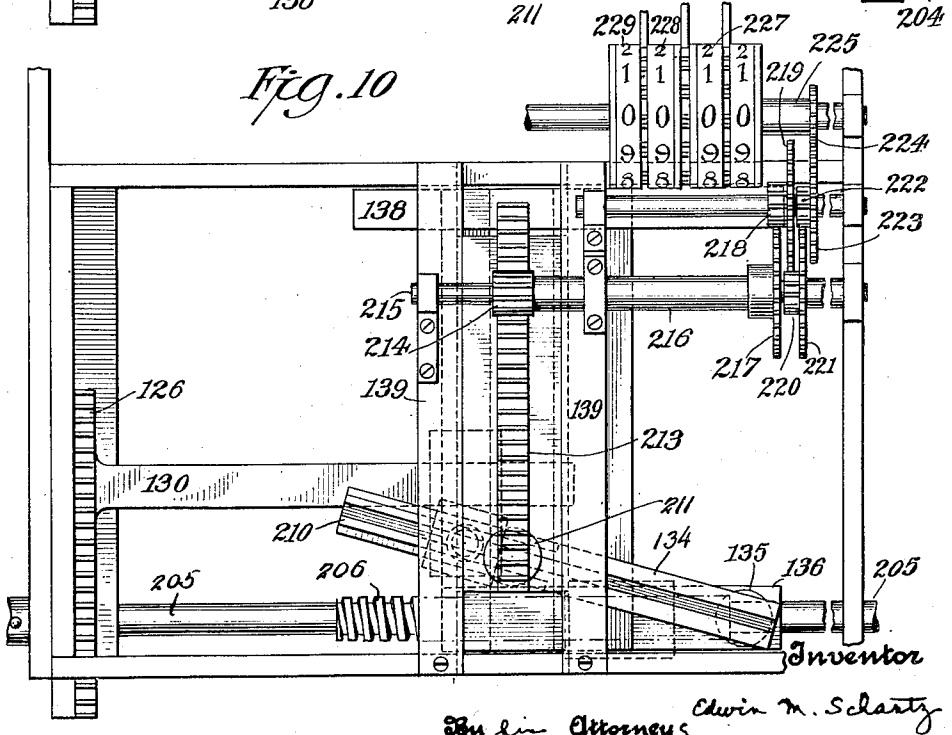

Inventor

Edwin M. Schantz

By his Attorneys

Kerr Page Cooper & Hayward

E. M. SCHANTZ.

COMPUTING RECORDING SCALE.

APPLICATION FILED MAR. 14, 1916.

1,299,786.

Patented Apr. 8, 1919.

8 SHEETS—SHEET 8.

Fig. 17

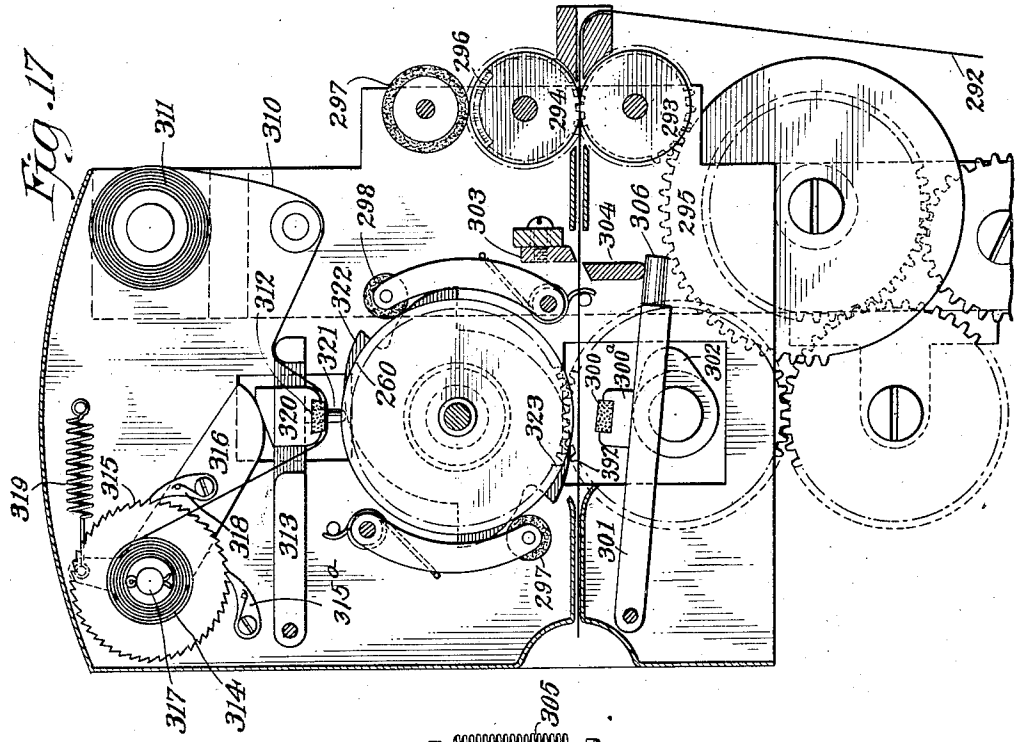

Fig. 16

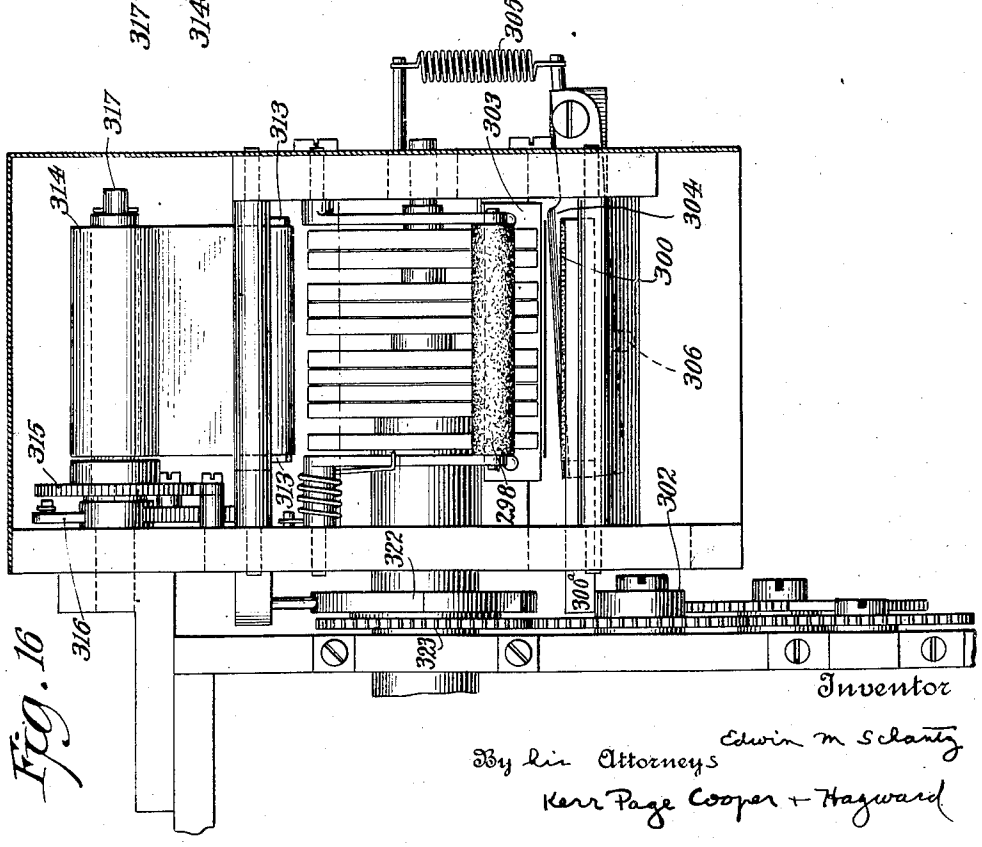

Inventor

Edwin M Schantz

By his Attorneys

Kerr Page Cooper + Hayward

UNITED STATES PATENT OFFICE.

EDWIN M. SCHANTZ, OF CHICAGO, ILLINOIS, ASSIGNOR TO THE COMPUTING SCALE COMPANY, OF DAYTON, OHIO, A CORPORATION OF OHIO.

COMPUTING RECORDING-SCALE.

1,299,786. Specification of Letters Patent. Patented Apr. 8, 1919.

Application filed March 14, 1916. Serial No. 84,019.

To all whom it may concern:

Be it known that I, EDWIN M. SCHANTZ, a citizen of the United States, residing at Chicago, county of Cook, and State of Illinois, have invented certain new and useful Improvements in Computing Recording-Scales, of which the following is a full, clear, and exact description.

This invention relates to certain new and useful improvements in computing recording scales of the type shown and claimed generically in the application of E. M. Schantz, Serial No. 695,879. The prinicpal objects of this invention are to improve the computing mechanism, to improve and introduce additional safety and interlocking devices into certain portions of the electric control mechanism to improve the pilot mechanism, to improve the price setting devices and to improve the controlling devices. In this application the computing, controlling and recording mechanism is shown in operative association with the well known drum scale of the spring type and the arrangement is such that the computing and recording devices may be easily attached to the well known scales now on the market. Further objects of this invention will be more fully pointed out hereafter.

In the drawings

Figure 1 shows an assembly view of the scale, computing, recording devices and the motor to drive the computer and recorder.

Fig. 2 shows a diagrammatic view of the pilot and electrical controlling devices.

Fig. 3 shows a detail assembly view of the computing and recording mechanism.

Fig. 4 is an end view of Fig. 3 looking from the right hand side.

Fig. 5 is a central sectional view of the price setting devices, and the connections to the price per pound indicator.

Fig. 6 is a detail view of the tens of cents drum and its connections to a rack used for positioning the computing bar.

Fig. 7 is a developed view showing the association of driving gearing between the different price per pound setting devices.

Fig. 8 is an enlarged detail view of the controlling keys and other parts shown in Fig. 4.

Figs. 9 and 10 are detail views showing the computing bar in two positions.

Fig. 11 is a sectional detail view of Fig. 5 taken on line 11—11 and looking in the direction of the arrow.

Fig. 12 is a detail sectional view taken on line 12—12 of Fig. 11 and looking toward the right.

Fig. 13 is a detail sectional view of Fig. 5 taken on line 13 and looking in the direction of the arrow.

Figs. 14 and 15 are detail enlarged views of the transferring mechanism for the computed cost indicators.

Figs. 16 and 17 show detail views of the recording mechanism.

In Fig. 1, 20 represents a scale pan which, through suitable lever mechanism, positions an indicating drum 21 to varying positions dependent upon the weight upon the pan 20. The drum is turned by means of a rack 22 and the rack is restrained against movement by a spring 23. These parts are well known in computing scales and need not be described in detail. It will be understood that at the opposite side of the scale the indicating drum is visible to the customers, who can see thereon the weight and computed cost of the article being weighed upon the scale. The lower end of the rack is extended and at its lower end are rack teeth which mesh with a pinion 24. This pinion is carried on a shaft 25 of the index or pilot mechanism. It will be understood that the shaft 25 will take varying angular positions dependent upon the weight on the scale platform and that these positions will conform in relative angular position to the position of the scale drum 21.

Inasmuch as articles or goods to be weighed, placed on the scale-pan 20, cause the latter to descend, and the other scale parts, such as the rack 22, to be actuated, until a condition of equilibrium is established, the scale can be aptly termed an equilibrium machine.

Pilot mechanism.

The pilot mechanism which is adapted with a minimum of friction to cause the computing machine and associated mechanism to be driven in accordance with the equilibrium machine is shown in detail in Figs. 1 and 2. The pilot mechanism is similar in some respects to the pilot mechanism

of the prior Schantz application above referred to. It comprises an insulating disk 26, which carries rigidly connected therewith a spur gear 27. On the face of the insulating disk are four blade spring contacts 28, 29, 30 and 31 which are limited in their inward movement by stops S and S''. The contacts 28 and 29 carry pointed contact pieces which when the scale is in equilibrium make contact with the sides of a contact piece which is carried by index 32. The index 32 is carried on the end of shaft 25 driven by pinion 24 and rack 22, which shaft is revoluble in a standard and to a certain extent in disk 26. The relative rotation of shaft 25 and disk 26 is limited by stops S', which prevent excessive distortion of contact springs 28, 29, 30 and 31. The arrangement is such that when the index 32 swings in a clockwise direction it breaks the contact between it and the blade 28. This causes a motor to turn which turns a gear 35 which turns the spur gear 27 and thereby rotates the insulating disk 26. The insulating disk carries both contacts 28 and 29 around with it until 28 catches up with 32 and 32 no longer bears excessively against 29. The arrangement is such that when the index 32 swings in the opposite direction the motor is revolved in the opposite direction and in this manner the insulating disk 26 is rotated counterclockwise until 29 catches up with the index 32. The motor then stops. The circuit connections which effect these results will be presently described.

The previously mentioned spring blades 30 and 31 are provided with pointed contacts which when the index 32 is in mid position *i. e.* with the scale in equilibrium either loaded or unloaded are adapted to contact with one another. An extension of the index carries adjustable insulated blocks 36 and 37, which when the index 33 moves from central position, are adapted to contact against one or the other of the blades 30 and 31 and break their contact. This will interrupt a circuit which will be hereafter traced and explained.

Electrical controlling devices.

When there is no load upon the scale at all, it is desirable that all current be shut off. For this purpose a current interrupter is provided. This interrupter is shown in Figs. 1 and 2 at 40 and consists of a pivoted member which is normally held from engagement with contact 41 by an abutment 42, which is carried on rack 22 or on any other moving part of the scale. The arrangement is such that when the rack is in normal position with no load on the scale the abutment 42 lifts the pivoted member and breaks contact 42 but immediately a load is placed on the scale the abutment moves down and lets the pivoted member make a contact. One side of the current interrupter is connected to a source of electric power as for example the battery 43. The other side of the contact device connects through a wire 44 and by a brush 45 or any suitable means to shaft 25 and through the latter to index 32.

Assuming a load is placed upon the scale; index 32, turning clockwise as viewed in Fig. 2, breaks contact with 28 and remains in contact with 29. This completes a circuit traced as follows: From battery 43 to current interruptor 40, wire 44, index 32, blade 29, then through wire 60, magnet 61, wire 62, magnet 63 and through wire 64 back to battery.

The energizing of magnet 63 closes the following circuit: From battery 43, to interrupter 40, wire 44, wires 65, 66, armature 67 (closed as shown in Fig. 2), wire 68, armature 69, (now closed by the energized relay magnet 63) wire 70, magnet 71, wire 72, and back through wire 64 to battery.

The energizing of magnet 71 swings the pivoted switch arm 74 to the right or clockwise. This switch arm is normally held in neutral position by springs 75. The switch arm then closes the following circuit. From battery 43, to interrupter 40, wire 65, field coils 76 of motor M, wire 77, switch blade 78, contact 79, wire 80, armature 81, thence through wires 82, 83, contact 84, blade 85, and wires 72, and 64 back to battery. The current now flowing in this circuit serves to rotate the motor M in a forward direction, thereby rotating pinion 35 which rotates gear 27 and disk 26 (Fig. 2, at the top) in the clockwise direction. Contact blade 28, mounted on the disk, is thus moved up to (or overtakes) the index 32 which, it will be remembered, was given by the movement of the scale-pan a sufficient initial clockwise rotation, relative to the disk 26, to break the connection with contact spring 28. The rotation of disk 26 by the pinion 35 therefore re-makes the connection mentioned. At the same time the described movement of the disk also carries contact spring 29 in the clockwise direction through an angle equal to that traversed by the index 32 in its aforesaid initial movement. The contact springs 28 and 29 are thus both restored to their initial position relative to the index, with both their contact points engaging the index.

Suppose the scale should swing too far and then swing back or suppose that part or all of the load is removed from the scale pan. If it occurs the pilot 32 will rotate in a counterclockwise direction and the contact with blade 29 will be broken and that with 28 maintained. This will close the following circuit: From battery 43, through interrupter 40, wire 44, contact 28, pilot or index 32, wire 157, switch 158, contact 159

(now closed) thence through wire 160, magnet 161, wire 162, relay magnet 163, wire 166, wire 64 back to battery.

The energizing of magnet 163 then closes the following circuit: From battery 43 through interrupter 40, wires 44, 65, 66, armature 167 (now closed as shown, magnet 63 being deënergized), wire 168, armature 169 (now closed, magnet 163 being energized) through wire 170, magnet 171 and back through wires 72 and 64 to battery.

The energization of magnet 171 throws the reversing switch 74 to reverse position (that is, counterclockwise) against action of springs 75. This closes a circuit as follows: From battery 43 through interrupter 40, wires 44, 65, field coils 76 of motor M in the same direction as heretofore, wire 77, blade 78, contact 184, wire 82 through armature 81 in the reverse direction, thence through wire 80, contact 79, blade 85, wires 86, 72 and 64 and back to battery. The effect is to drive the motor M in the reverse direction and to drive the insulating disk 26 in the reverse direction, that is, counterclockwise as viewed in Fig. 2.

Assume now that the scale has come to rest with a load on the pan, contacts 28 and 29 are now both in contact with index 32 and current is on since interrupter 40 is closed. The motor will now remain stationary and no current will flow in the motor circuit. This feature is important since it prevents the motor from burning out. In addition the present embodiment prevents undue sparking between points of blades 28, 29 and index or pilot 32 since these contacts do not carry the full current necessary to drive the motor but only the current to operate the relay magnets. Assume 32 in contact with both 28 and 29. Now current will flow through both contacts 28 and 29 passing concurrently through wires 157, 160, 162, magnet 163, wire 166, and wire 64 to battery and also through wires 60, 62, magnet 63, wire 64 to battery. Consequently both magnets 63 and 163 will be energized. No current will flow to either magnet 71 or 171 since circuit 168 will be broken by reason of armature 167 being to the right against magnet 63 and no current will flow to magnet 71 since circuit 68 is broken by armature 67 being to the left against magnet 163. Therefore, the switch 74 will be held in neutral mid position by the springs 75 and no current will flow to motor M.

It has been found in practice that the motor M has a tendency to rock first in one direction and then in the other when the scale is in equilibrium. The reason for this is the inertia of the parts which the motor drives. It is therefore desirable to disconnect the motor from the drive shaft when the scale is in position of equilibrium with a load thereon. The drive shaft 90, which leads from the motor to the computing and other mechanism is provided with a jaw clutch 91, a clutch member 92 is splined to the shaft 93 and this clutch member is arranged to be withdrawn when a magnet 94 is energized. This magnet is connected to wire 72 leading through wire 64 to the battery and also leading from magnet 94 is a wire 95 which connects with the contact of this relay 96 and with the contact of relay 98 which in turn connects with wire 44 leading to the other side of the battery. When the index or pilot 32 is in neutral position, (and the scale loaded, so that current can flow through the interrupter 40), both magnets 161 and 61 are energized and current flows to the magnet 94 and disconnects shafts 90 and 93. However, when the index is not in equilibrium either magnet 61 or 161 will be deënergized, thus breaking the circuit and allowing the shafts 90 and 93 to be clutched together. This device effectually prevents the hunting or rocking of the mechanism by motor M.

In the diagrammatic view, Fig. 2, the clutch is shown for convenience of illustration, directly on the end of the armature shaft but in the machine as shown in Fig. 1 this clutch is placed over the bevel gears which form an intermediate element of the driving train.

Printing control.

After the computation has been carried out the printing of the amount, weight, price per pound, etc., is effected. To carry out the actual printing the motor M is employed. It is necessary that the printing be so controlled that false printing cannot be effected.

First: Printing should be prevented when there is no load at all on the scale.

Second: Printing must not take place until the computing operation is complete.

Third: Printing must not take place until the scale is in equilibrium with the load thereon.

Fourth: When printing is being done means should be provided for preventing the reverse rotation of the motor and the motor should also be set into motion in a forward direction.

To accomplish the above results certain electrical controlling features are provided. These devices will now be described.

Connected with wire 44 which leads to the interrupter 40 is a wire 100 which leads to blade 31. A wire 101 leads from blade 30 to magnet 102 from which wire 103 leads through a circuit interrupter which will be hereafter explained. From this interrupter a wire 103[a] leads to wire 166, which leads by way of wire 64 back to the opposite side of the battery 43. Pivoted adjacent to magnet 102 is a latch 104 which is normally

held away therefrom by a spring. This latch in its normal position engages under and prevents the depression of a pivoted plate or bar 105. This plate lies under certain keys 270, Fig. 8, which will be more clearly described hereafter. And it will be seen that since the keys when depressed contact against the top of the plate it will be impossible to depress the keys until the latch 104 is withdrawn from engagement with the plate. Now tracing the circuits when there is no load upon the scale: Circuit interrupter 40 will be open as shown in Fig. 2, consequently no current can flow from the battery through wires 44, 100, blades 31, 30, wire 101 to magnet 102 and consequently the latch 104 is in the position shown and thus effectually prevents the depression of the keys and the carrying out of the printing operation.

Second: tracing circuit connections when the computing operation is incomplete, the index 32 will be moved from its central position thereby through insulated abutment 36 or 37 breaking the contact between blades 30 and 31. Therefore no current can flow to magnet 102 and consequently the keys cannot be depressed, nor can printing be carried out when the computing operation is incomplete. The same breaking of the contacts 30, 31 occurs when the scale is not in exact equilibrium.

In order to turn the motor forward to do the printing the switch blades 158 and 159 (upper left hand corner of Fig. 2) are employed. The former is carried on an insulating block on plate 105. Consider the scale in equilibrium and current flowing through magnet 102, latch 104 is disengaged from plate 105 and consequently the depression of one of the aforesaid keys will depress plate 105 and break contacts 158 and 159. Breaking of these contacts interrupts the current flowing from blade 28 to wire 157, etc., therefore deënergizing magnet 163 and breaking the circuit to magnet 171, whereby reverse rotation of motor M is prevented. At the same time, current continues to flow from blade 29 to magnet 63 and this is effective through the relays previously explained to supply current to motor M to drive it in a forward direction.

Price setting mechanism.

In this apparatus, the operator manually sets up the price per pound on certain setting devices. These devices manually set up the price per pound on certain price per pound indicators and at the same time the same setting is made upon price per pound type carriers. The price setting devices are also adapted to position a computing bar to a position according to the price per pound. These price setting devices will now be described together with their connections to the computing bar.

In Fig. 1, 110 is the fractions of cents lever, 111 is the units of cents setting lever, and 112 is the tens of cents setting lever.

Each of these setting levers have pinch members thereon which are provided with a projecting pin on their lower face which are adapted to enter cupped depressions in drums 113, 114 and 115 and hold the pinch levers in position after they have been set by the operator. The pinch members and setting levers will be hereafter termed pinch handle levers.

Drum 113 *i. e.* the fractions of cents drum is rigidly held in position by a bracket 116 (Fig. 7) on the machine frame. A screw and slot adjustment on the bracket is provided for slightly varying the position of this drum.

Referring now to Figs. 7 and 5, the drums 114 and 115 and the three pinch handle levers are revolubly mounted on a shaft 113^a carried in brackets in the frame. Pinch handle lever 110 is provided with a gear segment 117 which meshes with a gear 118 which gear is revolubly mounted in a bracket on the frame, Fig. 5. Gear 118 has secured to it a smaller pinion 119, which in turn meshes with a gear 120 which is keyed or otherwise secured to drum 114. Pinch handle lever 111 carries a similar segment 121 meshing with gear 122 which through gears 123 and 124 turns drum 115. Pinch handle lever 112 carries a large segment 125 which meshes with a rack 126, which sets the computing bar. The above described gear train has the following operations: Setting pinch handle lever 110 to a certain fraction turns drum 114 to a very slight extent which is proportional to the rotation between the setting levers 110 and 111. The movement of pinch handle lever 111 in turn turns drum 115 to a certain proportional extent. However, the arrangement of the gear train will permit any of the higher order of levers being moved without moving the drums of lower order. This is necessary to effect a proper indication and also to cause the rack 126 to be lifted when one of the higher order of levers is adjusted.

The operation of the various pinch handle levers effects the operation of the gear train as above described. The result is that the rack 126 takes a position which is a summation of the movements of the levers of different orders, corrections being made for the relative values of said levers. The summation of the movements is accomplished through the interlocking of the pinch handle levers on the drums. Since, if drum 114 is connected through gearing with pinch lever 110 and pinch lever 111 is interlocked with its drum, the pinch lever 111 will be

drawn forward upon the movement of pinch lever 110. This movement in turn will advance the pinch lever 112 a proportionate extent and so lift the rack. It will be seen that the above construction provides means whereby the setting of any pinch handle lever imparts motion to the pinch handle lever of next higher order, but no motion is imparted from pinch handle levers of higher orders to those of lower order.

Connections to computing bar.

The rack 126 is slidably mounted in the machine frame, see Figs. 9, 10, 11. The rack 126 carries a cross bar 130, which cross bar extends out directly at right angles from the rack and moves up and down in unison therewith. Slidable on cross bar 130 is a block 131 which extends downwardly. This block 131 is also slidable vertically on a vertical bar 132. The block 131, adjacent to its lower end has swiveled thereto a second block 133. The face of the latter block is T-slotted and thereby provided with overhanging guide portions which engage cooperating guide portions on the computing bar 134. The computing bar in turn is swiveled at 135 to a block 136, which block is connected to vertical bar 132 and a second vertical bar 137.

Vertical bars 132, 137 and blocks 136 and 138 fit closely within the upper and lower parts of the machine frame and are also guided between the front straps 139 and the back of the frame in such a manner that they can freely slide as a unit to the right and left in the frame. The above construction provides means whereby the computer bar 134 can be set to varying angular positions by the price setting devices and thereafter the angularity can be maintained as the computer bar is slid to the right and left in unison with block 136.

Price per pound indicators and connections to price per pound setting devices.

In this machine means are provided whereby the setting of the price per pound setting device, *i. e.*, pinch handle levers 110, 111, 112 is effective to position rotary indicators to boldly display the price per pound.

Referring to Figs. 5, 6, 7 and 3 the pinch handle levers carry gear segments 127, 128 and 129. These segments mesh with pinions 140, 141, 142. Pinion 142 is pinned to a shaft 143 which is revoluble in the machine frame. Pinion 141 is secured to sleeve 144 revoluble about shaft 143, and pinion 140 is secured to sleeve 145 rotatable on sleeve 144. Shaft 143, sleeve 144, and sleeve 145, carry gears 146, 147 and 148, respectively, which through similar pinions and sleeves drive the two-toothed driving members 149 and 150 and 151. One of these two-toothed driving members is shown in Fig. 13. These driving members are adapted upon their rotation to mesh with and drive gears 152, 153 and 154 which are rigidly secured to price per pound indicators 200, 201, 202, which indicators correspond with tens, units and fractions of cents of the prices per pound to be indicated. These indicators are freely rotatable upon a shaft carried in the machine frame as shown in Fig. 5. The toothed arrangement shown in Fig. 13 permits the slight increment of movement of the higher order of pinch levers which is imparted thereto by the lower order of levers to take place without immediately varying the higher order price per pound indicators. The toothed arrangement also correctly positions the indicator to correspond with any price per pound which is set by the setting levers 110, 111 and 112.

Computing bar driving connections.

As previously explained the motor M is controlled by the index or pilot mechanism and electrical controlling devices to turn a given number of revolutions or fractions of revolutions depending upon the load upon the scale pan. The connection between the motor M and the index insulating disk 26 and its driving gear 27, is through the bevel gears (shown in Fig. 1) and shafts 90 clutch 91, 92 (shown in Fig. 2) and shaft 93. The shaft 93 has splined thereon a clutch member 199, which when weighing is being carried out is in the position shown in Fig. 8. In this figure the clutch member is shown clutched to a worm 203 which is freely rotatable on shaft 93. This is the position of parts during the weighing operation and the clutch member 199 is disengaged from worm 203 for a purpose and by means which will be hereafter described.

The worm 203 meshes with a gear 204 which is secured to the end of a cross shaft 205. The latter cross shaft 205 is the shaft which carries on its end the gear 35 (Figs. 1 and 2) which meshing with the gear 27 on the pilot member disk 26 drives said disk and thereby controls the extent of rotation of the motor. The shaft 205, it will be understood, has a degree of rotation which is directly proportional to the load on the scale pan. This shaft is therefore employed for driving the computing bar and positioning it to a variable position relatively to the machine frame. For this purpose the shaft 205 carries a worm 206 which extends through an internally threaded extension 207 of block 136 (see Figs. 11 and 12). It will therefore be seen that the shaft 205 on rotating will position the computer bar in varying positions with respect to the sides of the frame and these positions will cor-

respond with and be directly proportional to the weight upon the scale.

Fig. 5 shows the computer bar 134 in normal position, that is, in the position (at the left) which it assumes when there is no load upon the scale.

Fig. 9 shows the computing bar in position with no load on the scale and with an upward inclination. This is the position which the computer bar assumes when it has been set by the pinch handle levers 110, 111 or 112 to correspond to a certain price per pound.

Fig. 10 shows the computer bar, in inclined position and slid to the right by the rotation of shaft 205, and worm 206, this being the position it assumes during or after a computing operation when there is a load on the scale.

Connections from computer bar to computed cost indicators.

As shown in Figs. 9, 10 and 11, the computer bar has a central slot 210. Engaged in this slot is a slide piece 211, which slide piece has a swiveling connection with block 212 which block is provided with tongues by which it is guided in slots in the vertical frame members 139. Attached to block 212 is a rack 213 which meshes with a pinion 214 which is freely rotatable on shaft 215 secured in the machine frame and to which pinion is secured a sleeve 216 which is revoluble about said shaft. The sleeve 216 carries a gear 217 which through a train of gearing 218, 219, 220, 221, 222 and 223, finally drives a pinion 224 which is attached to a sleeve 225 which carries the units computed cost indicator 226. From the units indicator the amounts are transferred by step by step transfer devices which are shown in more detail in Figs. 14 and 15. In this figure the units indicator is shown at 226, the dimes at 227, the units of dollars at 228 and the tens of dollar at 229. These indicators have secured thereto, gears 230, 231, 232, which mesh with and drive transfer devices comprising 233, 234, 235. It will be understood that the single tooth is adapted to mesh with a tens toothed gear on the higher order indicator and turn the indicator one step upon one complete revolution of the lower order indicator. This is shown in Fig. 15, in which 236 shows the one-toothed wheel and 237 shows any one of the ten-toothed gear wheels. It is to be understood that there is one of such gears 237 attached to each of the indicators 227, 228 and 229.

It will be understood that when the computer bar 134 is inclined (see Figs. 9 and 10) and is drawn to the right, the rack 213 will be elevated and that when the computer bar is moved to the left the rack 213 will be lowered. Through the connecting gearing just described, an amount corresponding to the computed cost will be set up upon the indicators upon the lifting of the rack, and upon the lowering of the rack the indicators will return to zero position. It will be clear that if there is a weight on the scale and the computation for a given price has been completed and thereafter the price setting levers are moved, the position of the computing bar will also be changed and the price upon the computed cost indicators will be correspondingly changed. From this it appears that the price levers may be set either before or after the weight is placed upon the scale, but it is preferable to make the setting first so that the motor power is utilized to set the computed cost indicators.

Weight indicators and driving connections therefor.

As previously explained, shaft 205 is given a degree of rotation proportional to the weight on the scale. The gear 35 is secured to the shaft and this gear through a train of gearing shown in Fig. 3, drives a sleeve 240, which carries on its end a gear 241 which meshes with a gear on the ounce indicator 242. The pound indicator 243 is driven from the ounce indicator by a gear 245 and a one-toothed transfer wheel 246 in the well known manner.

Recording device.

The shaft 247 which carries the transfer devices for the weight and computed cost indicators is employed as a support for the intermediate gearing to type wheels. This gearing is clearly shown in Fig. 3 and need not be described in detail. It is sufficient to state that gears 250 and 251 correspond and are geared to the pound and ounce indicators 243 and 242, gears 252, 253, and 254 are geared to the price per pound indicators 200, 201, 202, and gears 255, 256, 257 and 258 are geared to the computed cost indicators 229, 228, 227 and 226. Gears 250, 251, 252, 253, 254, 255, 256, 257, and 258 are secured to shaft 259 and to a series of nested sleeves which are freely rotatable about said shaft and about each other. These nested sleeves carry type wheels. Wheels 260 are the weight wheels for pounds and ounces. Wheels 261 are the price per pound wheels, and 262 are the computed cost wheels. All of these wheels carry a double set of type so that a duplicate record can be taken from the top and bottom of the wheels. There is also provided a single type wheel 263 which is adapted to print the initial of the clerk making the transaction. This type wheel 263 is set through a similar sleeve and gearing from the clerk's indicator 264 which is positioned in a manner to be hereafter described. All of the type wheels are inclosed in a housing 265 shown in Figs. 3

and 4. It will be understood that the weight type wheels 260 will be positioned by the motor M, the price per pound wheels 261 will be positioned directly by the movement of the price setting levers 210, 211 and 212 and that the computed cost wheels are positioned by the movement of the computing bar 134, which bar is moved by the motor M to an extent proportional to the load upon the scale. As previously explained these indicators may also be moved by the price setting levers.

In order to drive certain mechanisms which effect the actual printing including the feeding of paper and the severing of the printed check the motor M is utilized. To connect the printing devices with the motor certain keys are utilized which are also adapted to set up the initial of the clerk on the clerk's indicator 264 and upon the corresponding type wheel 263.

Referring to Fig. 8, 270 are three clerks' keys suitably lettered as with characters A, B, C. These keys are slidably mounted in a frame member 271 and are normally held outwardly by springs. The lower ends of the keys are adapted to impact against a plate 105 (previously referred to) which plate is pivoted at 272. This plate is normally held against movement by the spring pressed latch 104 which latch is only withdrawn by magnet 102, when the loaded scale is in equilibrium and the computing operation completed. It therefore follows that it is impossible to completely depress keys 270 until the scale is in equilibrium and the computing operation completed. When latch 104 is withdrawn from engagement the depression of the keys will rock the plate 105 downwardly and break contacts 158, 159. This starts the motor in the forward direction and rotates shaft 93, as already described. The rocking of plate 105 swings an arm 273 upwardly. This arm engages the clutch member 199 and lifts it from engagement with worm 203 and into engagement with a worm 274 which worm is freely rotatable on shaft 93. The worm 274, after being clutched to clutch member 199, rotates in unison with shaft 93 and drives a gear 275 with which it is intermeshed. Plate 105 has a second arm 276, which carries a pin 277. Upon the rocking of plate 105 and the starting of the motor, the pin 277 is engaged within a box cam 278 and held there until the gear 275 has made one complete revolution. A switch member 279 aided by a spring 280 then restores the plate 105 to the position shown thereby lowering the clutch member 199 and disconnecting worm 274 from shaft 93. The restoration of plate 105 to normal position restores the contact between 158 and 159 and stops the rotation of the motor M. The keys 270 are also utilized to set a clerk's indicator 264. Through a gear train shown in Fig. 3, the clerk's indicator is connected with a segment 281. Intermeshed with this segment is a pivoted segment lever 282 normally held in the position shown (in Fig. 8) by a spring. When one of the keys 270 is depressed a shoulder on the key contacts with the horizontal lower portion of the segment lever 282 and rocks it. The extent of the rocking will vary for different keys since the keys contact with the lever at varying distances from the pivot of the lever. In this manner a differential setting of indicator 264 is made depending on which key is depressed. In order to maintain the clerk's indicator in position after it is once set the segment is provided with a spring latch 283 which has a number of notches 284 thereon. On an extending portion of latch 104 is a sharpened pin 285 which when the magnet 102 is energized is adapted to enter one of the notches 284 and maintain the segment lever 282 in the position to which it has been set by a key. However as soon as magnet 102 becomes deënergized the pin 285 will be swung back to the position shown and the segment lever will be restored to normal position by its spring.

The above construction prevents printing being effected until the scale is in equilibrium and the computing operation completed. If the operator should attempt to press keys 270 too soon he will be apprised of his error by the fact that he cannot punch the key all the way down and also by the fact that the clerk's indicator does not stay in its set position but returns to zero. He must then wait until conditions are correct for the printing operation. It may also be desirable to prevent the printing during the movement of the price setting levers. This would be accomplished by placing a circuit interrupter in the circuit leading to magnet 102 which would interrupt the flow of current to magnet 102 during the movement of the setting levers 110, 111, and 112. This may be accomplished by providing a lever 287 over the gear wheel 258, see Figs. 2 and 3. This lever is provided with a lug 288 which registers with the depressions between the gear teeth of 258. When 258 is rotating (which is the condition when the price setting levers are being moved) the circuit will be broken at contacts 289 and 290 and the circuit to magnet 102 will be interrupted and the operation of printing prevented.

The printing device in this machine is adapted to print a detail strip of all the items and a check which is to be given to the customer.

Check printing and feeding mechanism.

The check paper is carried on a supply roll 291 Fig. 1. The paper tape 292 passes through check feeding rolls 293—294. These rolls are geared together and are driven by

an intermittent gear 295 which is turned through the gear train shown in Figs. 4, 16 and 17 and upon the rotation of gear 275. The upper of these rolls 294 carries a printing plate 296 which is inked from ink roll 297. This printing plate is adapted to print on the check the merchant's advertisement or any other printed matter. The check strip 292 is fed forward under the type wheels one of which is shown at 260, Fig. 17. The check finally extends outside the front of the case where it may be grasped by the operator. During the setting of the type carriers they are inked by spring pressed ink rolls 298. To imprint the amount upon the check, a platen 300 is employed. The platen is carried by a pivoted bar 301 and is forced into engagement with the type by means of a cam 302. This cam is turned by a gear train which connects with the gear 275, see Figs. 4, 14, 16 and 17. The movement of the platen carrying bar is also utilized to operate a pivoted knife and sever the check from the check strip. This knife comprises a stationary blade 303 and a pivoted swinging blade 304 which is normally held away from the stationary blade by spring 305, so that the check strip 292 can pass between. A pin 306 extends from the platen bar 301 and is adapted upon the upward movement of this bar to raise the pivoted blade 304 and sever the check. It will be understood that when the printing is being effected the first movement of the gear 275 advances the check through the printing device. Thereafter the platen contacts against the check and imprints the amounts thereon and concurrently therewith the check is severed from the strip.

Detail strip printing devices.

The detail strip 310 is passed from supply roll 311 under a guide rod and thence under impression platen 312 which platen is carried by lever 313 which is pivoted in the frame and the printer housing. After passing under platen 312 the detail strip is wound upon take up roll 314 which roll is provided with a ratchet disk 315. A bell crank 316 is pivoted upon the shaft 317 which carries the take up roll and this bell crank is provided with a feed pawl 318. A spring 319 rocks the bell crank in a clockwise direction and presses its end downwardly upon a block 320 which is carried by one of the levers 313. An extension of this block 320 carries a downwardly extending pin 321 which pin rides upon the periphery of an involute cam 322. This cam is provided with four notches two being deep and two shallow. A gear 323 is secured to the cam and meshes with the gear which rotates cam 302. Upon the rotation of the gear train, driven by gear 275 and shown in Figs. 4, 8 and 17, the pin 321 will be lifted, thus rocking bell crank 316 and by means of the pawl and ratchet the paper will be fed onto the take roll 314. Thereafter the pin 321 drops into the shallow notch of the cam and pulls a certain amount of paper from the supply roll 311, the take-up roll 214 being held against reverse or unwinding rotation by the holding pawl 315[a] engaging ratchet 315. When the cam 322 rotates further so that the pin 321 drops into the deep notch the platen 312 will be brought forcibly into contact with the type thereby impressing on the detail strip a record which is a duplicate of the amounts and characters printed upon the check.

It will be understood that the detail strip and check will show the weight of the article weighed, the computed cost in cents and fractions (decimals), the computed cost in dollars and cents, and the initial of the clerk making the transaction.

What I claim is:

1. In a device of the class described, in combination, a scale, devices to be positioned in accordance with the position of the scale, an index positioned by the movement of the scale to varying positions, a motor for moving the aforesaid devices, a motor circuit, a controlling circuit having a pair of contact members therein establishing a normally closed circuit through said index, means operable upon the movement of the index for breaking said controlling circuit, and means for thereby closing the motor circuit, whereby the motor drives the aforesaid devices in accordance with the displacement of the scale.

2. In a device of the class described, in combination, a scale, devices to be positioned in accordance with the position of the scale, a motor for driving the same, a motor circuit therefor, an index positioned to varying angular positions by the movement of the scale, contact devices associated with said index and establishing a closed circuit when said scale is in equilibrium, and means operable upon the movement of said index for opening said circuit and for thereby closing the motor circuit, whereby the motor drives the devices to an extent proportional to the angular movement of the index.

3. In a device of the class described, in combination, a scale, a device to be positioned in accordance with the position of the scale, a motor associated therewith, a motor circuit, an index positioned by the scale, a controlling circuit having contact devices in operative association with said index, said devices being adapted upon the movement of the index away from one device to so affect the controlling circuit as to establish the motor circuit to cause the motor to be driven in one direction, said de-

vices being adapted upon the movement of the index in the opposite direction to so reverse the motor circuit as to cause the motor to be driven in the opposite direction.

4. In a device of the class described, in combination, a scale, a computing machine, an index positioned by said scale to varying angular positions, a motor to drive the computing machine in accordance with the displacement of said scale, means for maintaining the motor inactive when the scale is in equilibrium and means operable upon the movement of the index for breaking one circuit and thereby closing another circuit to the motor whereby said motor turns in a direction corresponding to said index.

5. In a device of the class described, a scale, mechanism to be driven in accordance with the displacement of said scale, an index positioned by the scale, a follow up mechanism having contact devices thereon which when the scale is in equilibrium establish a closed circuit through said index, a motor for driving the aforesaid mechanism in accordance with the displacement of the scale, a power circuit therefor and relays controlled by the opening and closing of circuit through the aforesaid contacts and index, for closing and opening said power circuit to the motor and thereby operating the motor in accordance with the displacement of the scale.

6. In a device of class described, in combination, a scale, mechanism to be driven in accordance with the displacement of the scale, an index positioned by the scale, a follow up mechanism having contact devices associated therewith which establish closed circuits through said index when the scale is in equilibrium and open said circuits when the scale moves from equilibrium, a motor for driving the aforesaid mechanism, a power circuit therefor and electrical relay devices controlled by said motor for interrupting said power circuit to said motor when both contacts establish a circuit through the index and for closing and controlling the flow of current to the motor when one of said contacts is out of contact with the index, and thereby controlling the direction and extent of rotation of said motor.

7. In a device of the class described, an equilibrium machine, an index positioned thereby to varying angular positions upon a load being placed upon the equilibrium machine, a computing machine, a means for driving the computing machine in accordance with the displacement of the equilibrium machine, said means comprising, a motor and electrical control devices, said electrical control devices being adapted to open the motor circuit when said equilibrium machine is in position of equilibrium and to close circuits to said motor when the scale moves from a position of equilibrium.

8. In a device of the class described, in combination, an equilibrium machine, a computing device, means for applying an auxiliary source of power to drive the computing device in accordance with the displacement of the equilibrium machine, means for preventing the application of said power when the equilibrium machine is in the no load position of equilibrium, and an auxiliary means for mechanically disconnecting the auxiliary source of power when the equilibrium machine is in load position of equilibrium.

9. In a device of the class described, an equilibrium machine, a computing device, means for applying an auxiliary source of power to drive the computing device in accordance with the equilibrium machine, controlling means for said auxiliary power applying means, said controlling means being adapted to prevent the application of said power when the equilibrium machine is in either loaded or unloaded position of equilibrium, an auxiliary control adapted upon the equilibrium machine attaining a position of equilibrium with a load thereon to mechanically disconnect the power supplying means and the computing device.

10. In a device of the class described, an equilibrium machine adapted to move to a variable position of equilibrium in accordance with variable load thereon, a computing machine and a recording machine, means for applying an auxiliary source of power to drive the computing machine and position elements of the recording machine in accordance with the variable displacement of the equilibrium machine, and means for preventing the operation of the recording machine except when the equilibrium machine is in position of equilibrium.

11. In a device of the class described, an equilibrium machine, a computing device and a recording machine, means to apply an auxiliary source of power to drive the computing device and to position elements of the recording device in accordance with the displacement of the equilibrium machine, means for preventing the operation of the recording machine until the equilibrium machine is in position of equilibrium with a load thereon, and means operable upon the equilibrium machine attaining equilibrium for driving the recording machine by the auxiliary source of power.

12. In a device of the class described, an equilibrium machine, a computing machine and a recording machine, means for applying an auxiliary source of power to drive the computing machine in accordance with the displacement of the equilibrium machine, means for positioning elements of the re-

cording machine in accordance with the computing machine, means for preventing the operation of the recording machine until the recording machine is in position of equilibrium with a load thereon and means for driving the recording machine in a forward direction when said equilibrium machine is in said position of loaded equilibrium.

13. In a device of the class described, in combination, an equilibrium machine, a computing machine, means for applying an auxiliary source of power to drive the computing machine in accordance with the equilibrium machine, controlling devices for said power applying means to discontinue the application of said power when the equilibrium machine is in position of loaded equilibrium and to prevent the application of power when the equilibrium machine is in no load equilibrium, means for positioning elements of the recording machine in accordance with the displacement of the equilibrium machine and the computing machine, means for preventing the operation of the recording machine until the equilibrium machine is in position of loaded equilibrium, and means for thereafter driving the recording machine by the auxiliary source of power.

14. In a device of the class described, in combination, an equilibrium machine, a computing machine, means for positioning elements in said computing machine in accordance with the price per pound, means for driving the computing machine in accordance with the displacement of the equilibrium machine, a recording machine, means for positioning elements therein in accordance with the computing machine and the equilibrium machine, means for preventing the operation of the recording machine during the positioning of the price per pound setting elements, means for preventing the operation of the recording machine until the equilibrium machine is in position of loaded equilibrium and means for thereafter driving the recording machine by the auxiliary source of power.

15. In a device of the class described, a scale, a computing machine, a recording machine, means for operating the computing machine to carry out a computation therein, means to operate the recording machine to make a record, means for preventing the operation of the computing machine and the recording machine when the scale is in no load equilibrium, and means for preventing the operation of the recording machine when the computing machine is in operation.

16. In a device of the class described, a scale, a computing machine and a recording machine, means controlled by the scale for operating the computing machine and certain elements of the recording machine, means for operating the recording machine and taking a record therefrom, and means for preventing the taking of a record when the scale is in no load equilibrium.

17. In a device of the class described, a scale, a computing machine and a recording machine, means controlled by the scale but operated by a source of power independent of the scale for operating the computing machine and certain elements of the recording machine, means for operating the recording machine and taking a record therefrom, and means for preventing the taking of a record during the movement of parts of the computing machine.

18. In a device of the class described, a scale, a computing machine and a recording machine, means controlled by the scale for operating the computing machine and certain elements of the recording machine, means for operating the recording machine and taking a record therefrom, and means controlled by both the scale and the computing machine for preventing operation of the recording machine to take a record until the operation of the computing machine is completed and the scale is in equilibrium.

19. In a device of the class described, a scale, a computing machine and a recording machine, means controlled by the scale for operating the computing machine and certain elements of the recording machine, means for operating the recording machine and taking a record therefrom, and means for preventing the operation of said record taking means except when the scale is in position of loaded equilibrium and the computing machine is stationary.

20. In a device of the class described, in combination, an equilibrium machine, a computing machine and a recording machine, an auxiliary source of power, means for applying said power for driving the computing machine in accordance with the displacement of the equilibrium machine, means for disconnecting said computing machine from the source of power, said means being adapted to engage the recording machine with said source of power whereby the said recording machine is operated and a record taken.

21. In a device of the class described, in combination, an equilibrium machine, a computing machine and a recording machine, connections intermediate the computing machine and the recording machine whereby the computing machine positions elements of the recording machine, an auxiliary source of power, means for applying the auxiliary source of power to drive the computing machine in accordance with the displacement of the equilibrium machine, clutch means for disconnecting the computing machine from the auxiliary source of power

and for connecting the driving connections of the recording machine with said source of power whereby a record is taken from the positioned elements of the recording machine.

22. In a device of the class described, in combination, a computing machine, a recording machine, driving means therefor, means for connecting said driving means with the recording machine and for concurrently disconnecting said driving means from the computing machine.

23. In a device of the class described, in combination, a computing machine, a recording machine, a driving means therefor, a plurality of keys for disconnecting said driving means from the computing machine and for connecting said driving means to the recording machine.

24. In a device of the class described, in combination, a computing machine, a recording machine, a driving means therefor, a plurality of setting elements any one of which upon its operation is adapted to disconnect one of the aforesaid machines and connect the other machine with the driving means, and a member positioned differentially upon the operation of said keys to differentially position elements of the recorder whereby a record may be made denoting which key has been operated.

25. In a device of the class described, in combination, a scale, a computing machine having provisions to drive the same in accordance with the displacement of the scale and adapted to thereby multiply the weight upon the scale by a price per pound and obtain a product representing computed cost, a recording machine having type elements therein which are controlled by the scale and the computing machine, a plurality of clerks' keys, type carriers in the recording machine positioned by the operation of said keys to record the initial of the clerk making the transaction, a driving means, and means controlled by the keys for connecting the recording machine with said driving means.

26. In a device of the class described, an equilibrium machine, a computing machine, a recording machine, type carriers in said recording machine, indicators geared to said type carriers, means for applying an auxiliary source of power to drive the said computing machine in accordance with the displacement of the equilibrium machine, means controlled by the computing machine to position indicators and type carriers for computed cost, manually operated means for positioning certain indicators and certain type carriers to correspond with the price per pound, a plurality of clerks' keys adapted to position certain indicators and certain type carriers to show the initial of the clerk making the transaction, and means controlled by said keys for disconnecting the power means from the computing machine and for thereafter connecting the recording machine with the power means to take records from the positioned type carriers.

27. In a computing attachment for scales, an index positioned by the scale, a follow up mechanism having means independent of the motor power of the scale to cause the same to move and to take positions corresponding to the position of the index, a computing member, price setting devices to variably position the computing member in accordance with different prices per pound, and means for moving the computing member in accordance with the movement of the follow up mechanism whereby the member is moved to an extent proportional to the load upon the scale.

28. In a device of the class described, an equilibrium machine having an index positioned thereby, a follow up mechanism having means independent of the motive power of the equilibrium machine to cause the follow up mechanism to move and take positions in accordance with said index, a computing member adapted to move in unison with said follow up mechanism, price setting devices adapted to vary the inclination of said computing member, and mechanism adapted to be moved by the computing member to an extent of movement as controlled by the follow up mechanism whereby the price per pound is multiplied by the weight and the computed cost obtained.

29. In a device of the class described, an equilibrium machine, an index positioned thereby, a follow up mechanism adapted to move and take a position of registry with said index, price setting devices adapted to set up on indicators the price of a commodity per pound, a computing member and connection elements between said member and the price setting elements whereby said member is varied in inclination according to the price per pound set up on the indicators, an auxiliary source of power, means for applying an auxiliary source of power to move the follow up mechanism to its position of registry with the index and to concurrently move the computing member bodily whereby the before mentioned inclination imparts movement to certain elements to an extent proportional to the computed cost of a commodity.

30. In a device of the class described, computing means adapted to be positioned to differential positions in accordance with the weight of an article and the price per pound of said article in combination with means for differentially positioning the computing means in accordance with the price per pound, said means comprising a plurality of

price setting levers of different orders, and connections intermediate said levers, said connections being adapted to drive the higher order levers proportionally upon the movement of the lower order levers and connections intermediate the price setting lever of the highest order and the computing means for differentially positioning said computing means.

31. In a device of the class described, a computing means adapted to be positioned to differential positions in accordance with the weight of an article and the price per pound of said article, in combination with means for differentially positioning said computing means in accordance with the price per pound, said means comprising a plurality of price setting devices of different orders, gearing intermediate said setting devices, said gearing being adapted to proportionally move the higher order device upon the movement of a lower order device and permitting the lower order device to remain stationary upon the movement of a higher order device.

32. In a device of the class described, in combination, a price setting means comprising a plurality of setting elements, each of said setting elements being adapted to be moved differentially in accordance with a price per pound, and means for transferring the movement of one setting device to another whereby upon the movement of the setting device of the highest order a proportional summation of the movements of all devices of various orders is obtained.

33. In a device of the class described, in combination, a price per pound setting and indicating device, comprising an element to be differentially positioned according to the price per pound, a plurality of indicators for various denominations as fractions, units and tens of cents, a plurality of price setting levers of denominations corresponding to the order of the indicators, a plurality of connecting elements between the indicators and the setting levers whereby upon the movement of a setting lever the indicator of the corresponding order is moved to a proportionate extent, connecting elements between the higher and lower order of levers whereby the movement of a lower order lever imparts a proportional movement to all the higher order levers and connections intermediate the higher order lever and the elements to be differentially positioned in accordance with the price per pound for positioning said element upon the movement of said levers.

34. In a device of the class described, a price setting and indicating device, comprising, in combination, a plurality of indicators, a plurality of price setting levers of different denominations, means for positioning the indicators upon the movement of said levers, a computing element adapted to be differentially positioned to variable angular positions to correspond to the prices set up by said levers and to thereafter be moved to effect the computation, and means operable by the movement of said levers for setting said element to a position which represents the proportional summation of the movement of the setting levers.

35. In a device of the class described, a price setting and indication device comprising in combination, a plurality of indicators, a plurality of price setting levers of different denominations, means for positioning price per pound indicators by the movement of the setting levers, said means being adapted to permit a movement of one lever to a fraction of a unit without correspondingly moving the indicator, an element adapted to be differentially and proportionally moved by the movement of any of said levers, and connecting means between said levers and said element for imparting to said element a movement which is a proportional summation of the movement of the said levers.

36. In a device of the class described, an equilibrium machine, a computing machine and a recording machine, differentially positionable manually operated price setting devices, connections from said devices to a plurality of price per pound indicators, connections intermediate said devices to move the higher order devices upon the movement of the lower order devices, connections intermediate said devices and a computing member, means for positioning the said computing member to an extent determined by the operation of the equilibrium machine, connections from said computing member to computed cost indicators, connections intermediate the computed cost indicators to computed cost type carriers, connections intermediate the price per pound indicators and price per pound type carriers, means for taking a record from the positioned type carriers, and means for preventing the taking of the record until the type carriers are stationary.

37. In a machine of the class described, in combination, an equilibrium machine, a computing machine and a recording machine, means for operating the computing machine and limiting the operation in accordance with the displacement of the equilibrium machine and in accordance with the price per pound of the commodity weighed, means for operating the recording machine in accordance with the equilibrium machine, a plurality of clerks' keys, means for locking said keys against depression, said locking means being operable when the computing or equilibrium machine is in motion and when the equilibrium machine is in no load equilibrium whereby the said keys may only be op-

erated at the proper time, and means operable upon the operation of said keys for taking a record in the recording machine.

38. In a device of the class described, an equilibrium machine, a computing machine and a recording machine, a plurality of clerks' keys for taking records from the recording machine, said keys being ineffective when the equilibrium machine or the computing machine is in such condition as to give improper records in the recording machine.

39. In a device of the class described, an equilibrium machine taking varying positions in accordance with varying loads thereon, a computing recording machine, a driving means therefor independent of the motive power of the equilibrium machine, means to prevent the driving operation when the equilibrium machine is in either loaded or no-load position of equilibrium, means for taking a record from the recording machine, and means for preventing the taking of the said record at improper times.

40. In a device of the class described, an equilibrium machine taking varying positions in accordance with varying loads thereon, a recording machine adapted to record the weight on the equilibrium machine and means to prevent the taking of a record when the equilibrium machine is in no-load position of equilibrium.

41. In a device of the class described, an equilibrium machine, a computing machine, and a recording machine separate from but driven by the computing machine, means for taking records from the recording machine and means for preventing the taking of records when the computing machine is in operation.

42. In a device of the class described, an equilibrium machine adapted to take varying positions of equilibrium in accordance with varying loads thereon, a computing machine comprising a computing member adjustable to varying degrees of angularity in accordance with price per pound, motive power means independent of the motive power of the equilibrium machine for displacing said member and limiting the extent of such displacement in accordance with the displacement of the equilibrium machine, devices set by said computing member in accordance with both the degree of angularity and the displacement thereof, and means for taking printed records from said devices comprising means for taking a detail strip record and a duplicate check record.

In testimony whereof I affix my signature in the presence of two subscribing witnesses.

EDWIN M. SCHANTZ.

Witnesses:
SAMUEL W. HASTINGS,
RICHARD P. EVANS.