Sept. 30, 1969 A. N. HALE ET AL 3,469,545

CONVEYOR SEWING UNIT WITH SHIFTABLE TOP FEED BELT AND WORK LOADING ARRANGEMENT

Filed June 14, 1967 4 Sheets-Sheet 1

FIG. 1

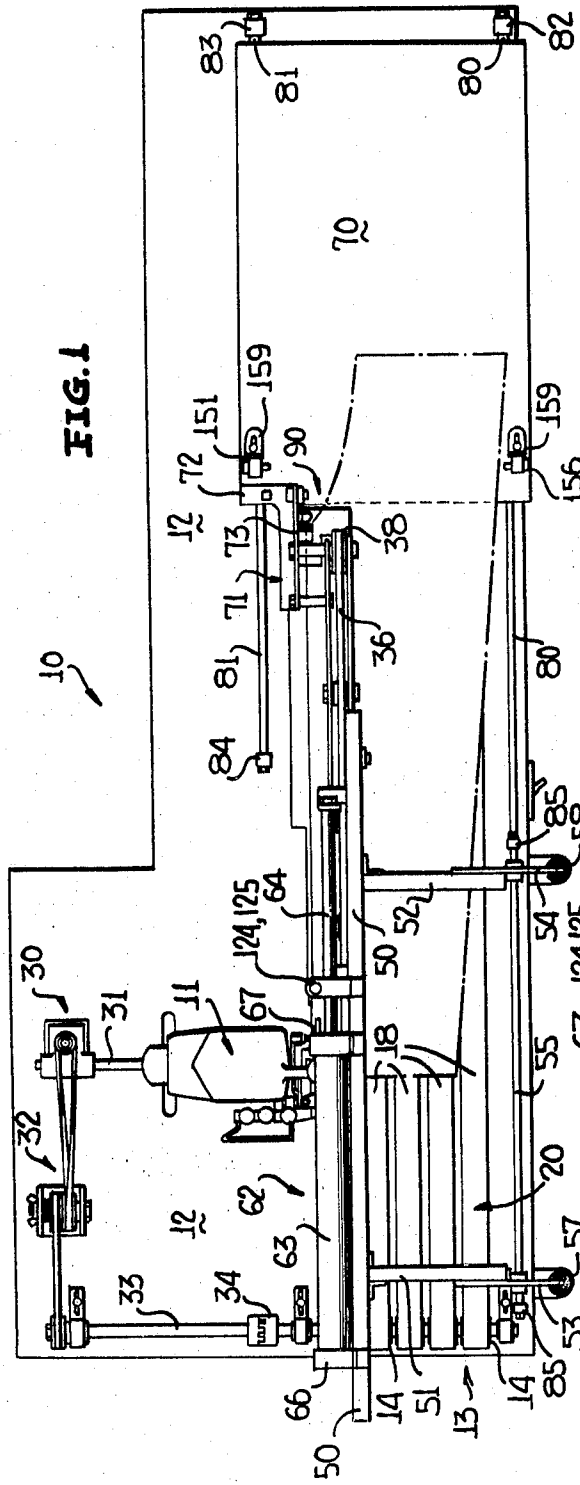

FIG. 2

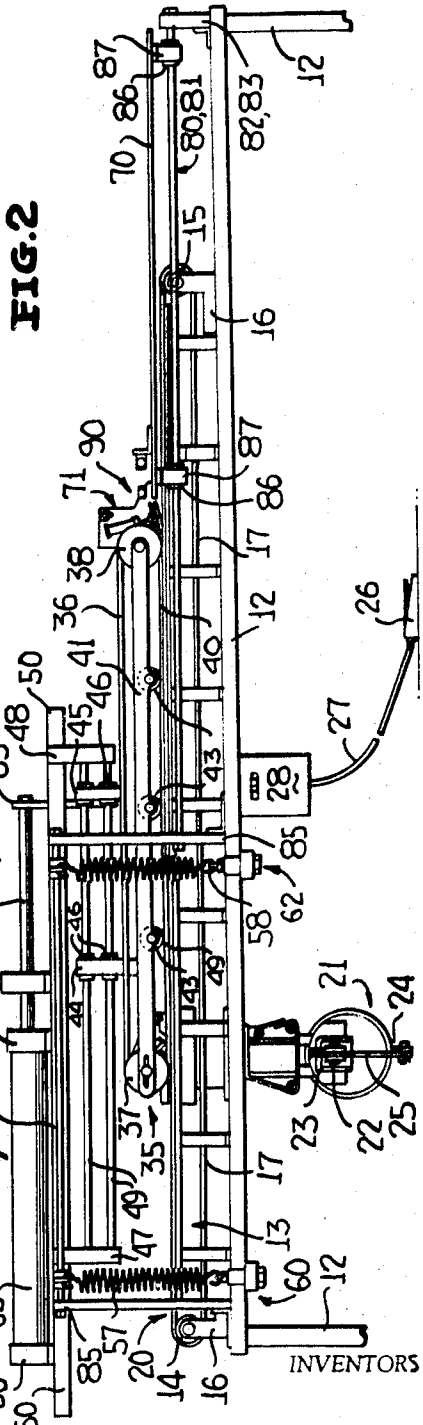

INVENTORS

ARTHUR N. HALE &
ROBERT L. KOSROW

BY

Mason, Porter, Miller & Brown

ATTORNEYS

Sept. 30, 1969 A. N. HALE ET AL 3,469,545

CONVEYOR SEWING UNIT WITH SHIFTABLE TOP FEED BELT AND WORK LOADING ARRANGEMENT

Filed June 14, 1967 4 Sheets-Sheet 2

FIG. 3

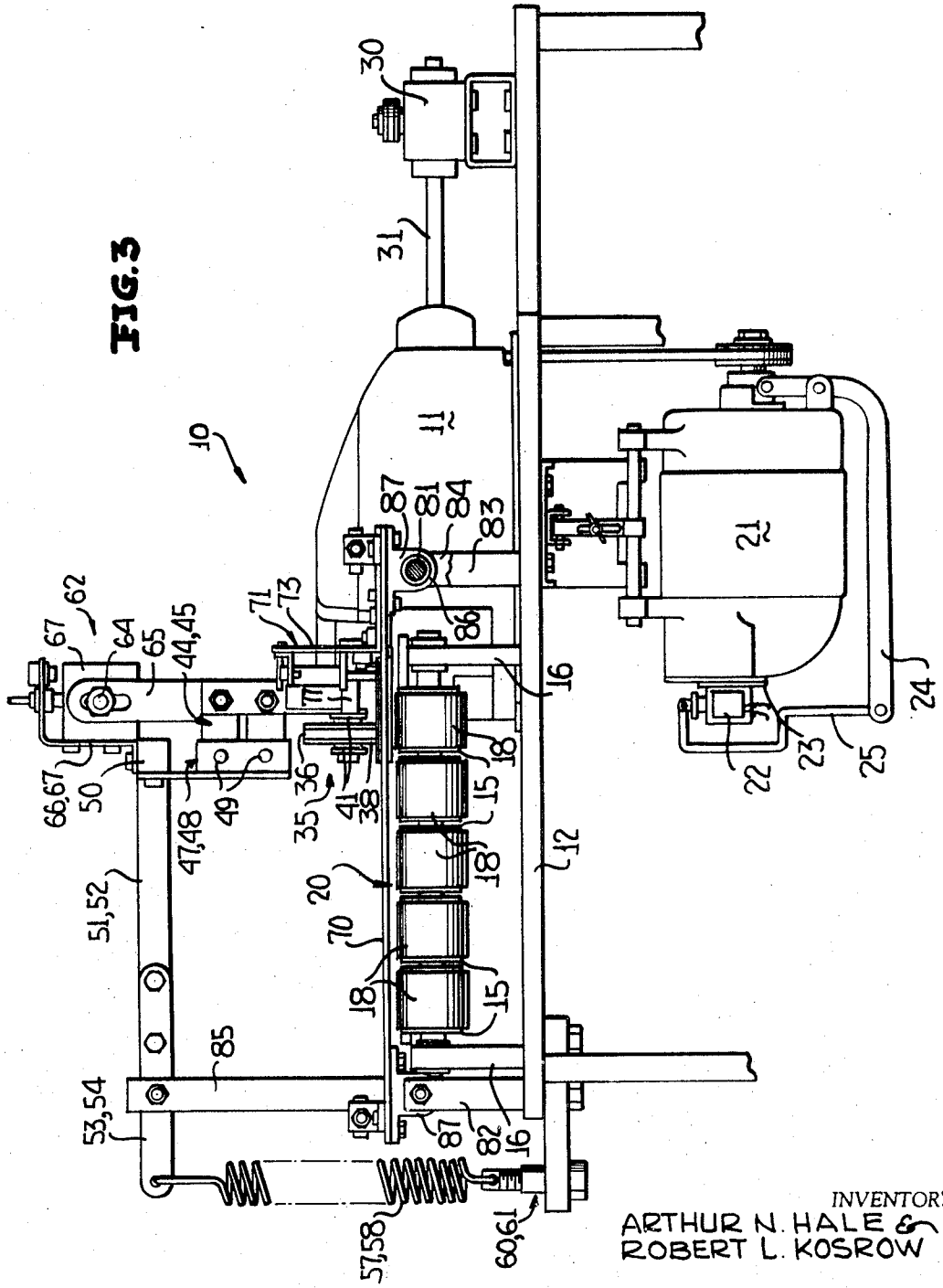

INVENTORS
ARTHUR N. HALE &
ROBERT L. KOSROW

BY
Mason, Porter, Dilles & Brown
ATTORNEYS

Sept. 30, 1969 A. N. HALE ET AL 3,469,545

CONVEYOR SEWING UNIT WITH SHIFTABLE TOP FEED BELT AND WORK LOADING ARRANGEMENT

Filed June 14, 1967 4 Sheets-Sheet 3

FIG.4

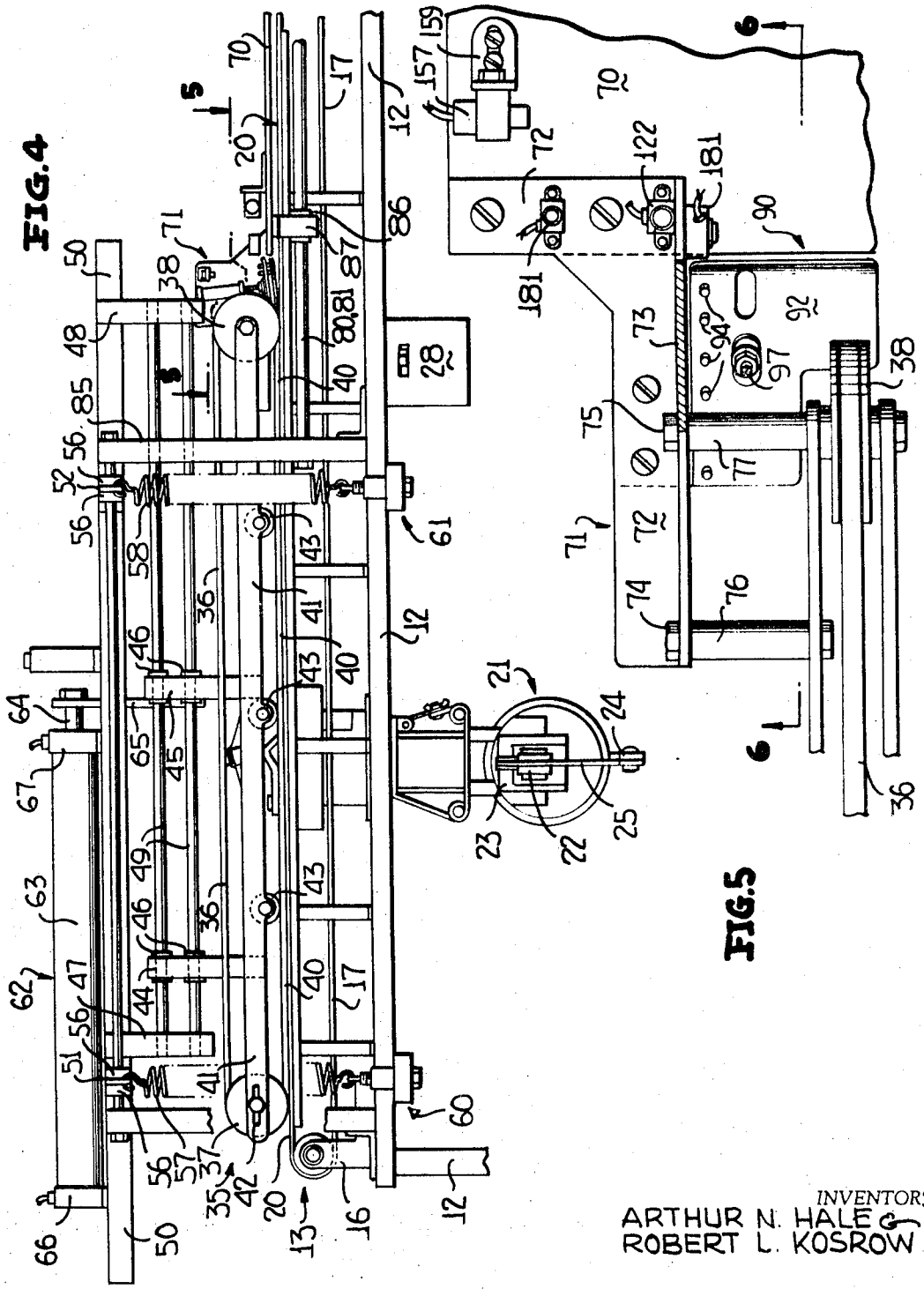

FIG.5

INVENTORS
ARTHUR N. HALE
ROBERT L. KOSROW

BY
Mason, Porter, Diller & Brown
ATTORNEYS

Sept. 30, 1969 A. N. HALE ET AL 3,469,545

CONVEYOR SEWING UNIT WITH SHIFTABLE TOP FEED BELT AND WORK LOADING ARRANGEMENT

Filed June 14, 1967 4 Sheets-Sheet 4

FIG.6

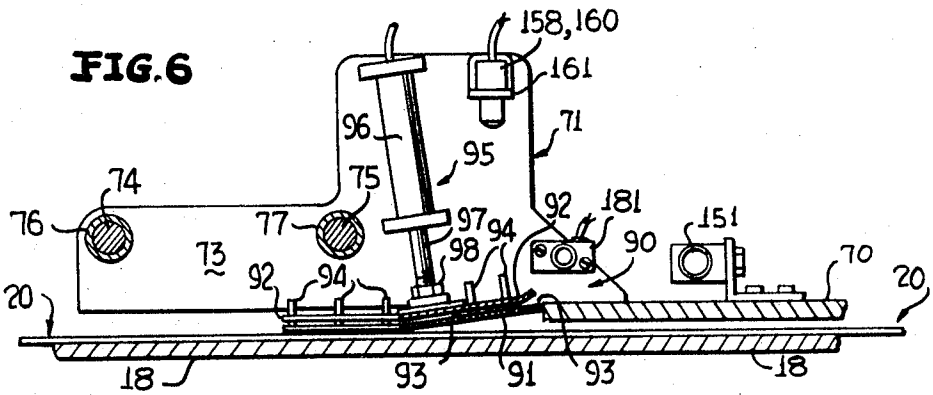

FIG.7

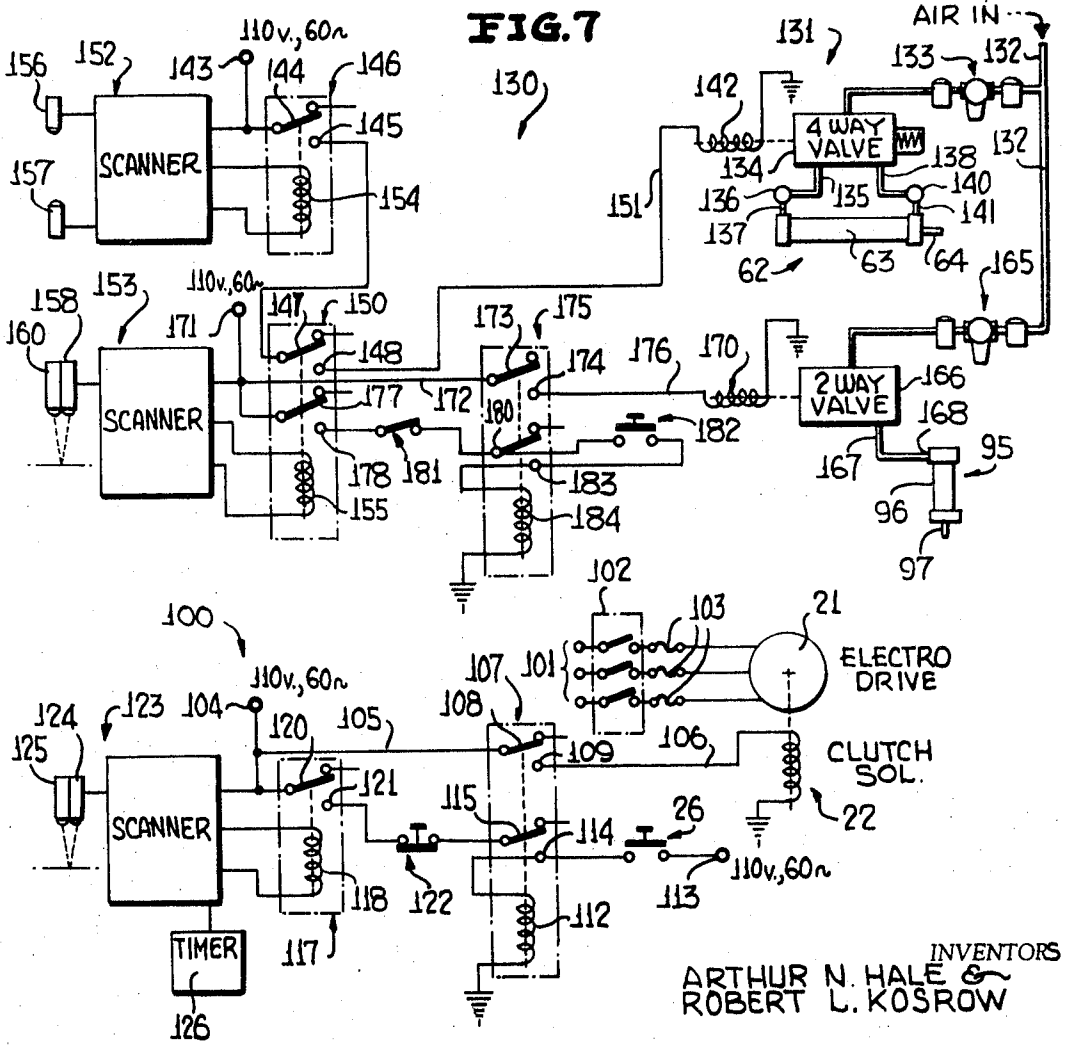

INVENTORS
ARTHUR N. HALE &
ROBERT L. KOSROW

BY Mason, Porter, Diller & Brown
ATTORNEYS

United States Patent Office 3,469,545
Patented Sept. 30, 1969

3,469,545

CONVEYOR SEWING UNIT WITH SHIFTABLE TOP FEED BELT AND WORK LOADING ARRANGEMENT

Arthur N. Hale, Park Ridge, and Robert L. Kosrow, Hoffman Estates, Ill., assignors to Union Special Machine Company, Chicago, Ill., a corporation of Illinois

Filed June 14, 1967, Ser. No. 646,042
Int. Cl. D05b 27/00; B65g 15/14; B65h 23/04
U.S. Cl. 112—2 28 Claims

ABSTRACT OF THE DISCLOSURE

A sewing unit having a lower conveyor for moving work pieces to a sewing machine, an upper clamping conveyor, a work piece loading platform and a work piece guiding device. The upper clamping conveyor, work piece loading platform and guiding device are movable in the conveying path, toward and away from the sewing machine. Control means control the power input to the conveyor and sewing machine and, further, control the movement of the upper clamping conveyor, loading platform and guiding device toward and away from the sewing machine.

This invention relates to sewing apparatus with new and improved work piece feeding, guiding and clamping means. More particularly, this invention relates to sewing apparatus especially adapted to facilitate the continuous feeding of separate work pieces through a sewing station and in close proximity one to another, thereby greatly improving the efficiency of operation of the sewing procedure as compared with previously known sewing apparatus.

In the past, difficulties and inefficiencies have been encountered in the sewing together of superimposed plies of flexible material, such as garment sections and the like. Such difficulties and inefficiencies have, previously, been especially prevalent where the work pieces have had dissimilarly contoured edges along the sides thereof which were to be sewed together. For example, the aforementioned difficulties were, heretofore, especially prevalent in the assembling of front and back portions of men's shirts, wherein such front and back portions generally do not have conforming edges portions along the edges to be joined. The aforementioned difficulties have been typically encountered in firstly, the arrangement of the edge portions of the superimposed work pieces in proper registration for the sewing operation, secondly, the maintenance of such proper registration during the feeding of the superimposed work pieces to and through the stitching or sewing station of the sewing apparatus and thirdly, the assurance that the respective trailing ends of each of the superimposed work pieces were in the desired relation one to another to provide, if desired, the necessary overextension of one of the super-imposed plies by a predetermined margin.

A sewing unit operator, to provide acceptable results in the aforementioned type of sewing operation, had to be extremely skillful in order to successfully, simultaneously feed, guide and match the superimposed work pieces. Due to the aforementioned high degree of skill required of such sewing unit operators, and even when such skilled operators were employed, it has been not uncommon to experience a high rejection rate of sewed together work pieces resulting from an improper joining of such work pieces. Furthermore, due to the difficulty of feeding, guiding and matching the superimposed work pieces, it has not, heretofore, been possible to employ modern sewing machines to the fullest of their high-speed capability in

such sewing operations. A further undesired effect of the high degree of skill required in the aforementioned sewing operations has been a relatively high level of operator fatigue resulting in an even higher rejection rate of sewed together work pieces. From the foregoing discussion, it should be apparent that the production of completed articles requiring the use of such sewing operations has been exceedingly costly.

Prior attempts to overcome the forementioned problems have involved the pre-matching and pre-attaching, as by basting or pinning together, of work pieces to be sewed. Such pre-matching and pre-attaching, however, has required an additional expenditude of time either by the sewing unit operator or by addition personnel. Thus, even though the sewing machine could then be employed at greater speeds of operation, little or no reduction in costs has been effected by the pre-matching and pre-attaching of work pieces.

In accordance with the foregoing, it is a primary object of this invention to provide sewing apparatus adapted for continuous operation at near maximum efficiency of all of the components of the sewing apparatus and under the supervision of a relatively unskilled person.

Further, an object of this invention is to provide sewing apparatus particularly suited for the joining together of dissimilarly contoured edges of superimposed work pieces.

Additionally, an object of this invention is to provide sewing apparatus including a substantially automatically operated sewing station and substantially automatically operated work piece feeding apparatus.

Another object of this invention is to provide sewing apparatus including a work piece feeding arrangement capable of the continuous feeding of work pieces in successive order to and through the sewing or stitching station of such sewing apparatus.

Yet another object of this invention is to provide conveying apparatus having a clamping device arranged above a work piece supporting conveyor and movable with respect thereto for clamping work pieces to such conveyor during their movements thereon.

A still further object of this invention is to provide a movable work piece loading platform mounted for movement in opposition to and in cooperation with a work piece transporting conveyor for the facilitation of the arrangement of work pieces prior to their being positioned on the conveyor.

Additionally, it is an object of this invention to provide a work piece guiding device suitable for the guidance of work pieces onto a conveyor without disturbance of the pre-arrangement of such work pieces.

Further still, it is an object of this invention to provide control means for controlling the movement of each and/or all of the aforementioned clamping apparatus, work piece loading platform and work piece guide means.

Yet an additional object of this invention is to provide control means for controlling the operation of a conveyor and sewing machine utilized to sew a continuous succession of work pieces carried by the conveyor.

Yet another object of this invention is to provide clamping means as set forth hereinabove and including a conveyor belt having a lower run movable in cooperation with the work piece supporting conveyor and bodily displaceable to roll upstream along such conveyor and along the work pieces thereon while clamping the work pieces to such conveyor.

Further, it is an object of this invention to provide a work piece clamping device as set forth hereinabove wherein the weight of the work piece clamping device is substantially counterbalanced to exclude the application of excess force to the work pieces while they are clamped to the conveyor.

Yet another object of this invention is to provide a

work piece guiding device of the aforementioned type wherein the guiding device is effective to exert a retarding force to an edge portion of the work piece upon the movement of such edge portion through the guiding device.

Still further, it is an object of this invention to combine any and/or all of the aforementioned apparatus into a sewing unit which may be operated safely, efficiently and at greater speed than has heretofore been possible.

With the above, and other objects in view that will hereinafter appear, the nature of the invention will be more clearly understood by reference to the following detailed description, the appended claims and the several views illustrated in the accompanying drawings.

In the drawings:

FIGURE 1 is a top plan view of a sewing unit embodying the present invention and shows a sewing machine and a cooperating conveying system with a work piece positioned thereon.

FIGURE 2 is a front elevational view of the sewing unit and shows an upper clamping conveyor, a work piece loading platform and a work piece guide device therebetween.

FIGURE 3 is an enlarged side elevational view, parts being broken away for clarity, and showing the clamping conveyor support apparatus and a biasing spring attached thereto.

FIGURE 4 is an enlarged fragmentary front elevational view and shows the upper clamping conveyor assembly in its extreme downstream position.

FIGURE 5 is an enlarged fragmentary sectional view taken along the line **5—5** of FIGURE 4 and shows in greater detail a work piece guiding device.

FIGURE 6 is a fragmentary sectional view taken along the line **6—6** of FIGURE 5 and shows the work piece guiding device and its associated actuator.

FIGURE 7 is a schematic diagram of the control system employed in the automatic control of the present invention.

Referring now to the drawings in detail, there is shown in FIGURES 1 and 2 a sewing unit, generally indicated by the numeral **10** including a sewing machine **11** mounted upon a support frame **12**. The sewing machine **11** may be any of a number of commercially available sewing machines, preferably of the "over-edge" type, suitable for the performance of a two-thread, over-edge stitching operation and capable of providing a continuous line of stitches on a flat piece of work. An example of such a suitable sewing machine is the Class 39500 machine manufactured by the Union Special Machine Company. However, any equivalent machine will suffice.

A work supporting and transporting lower conveyor assembly, generally indicated by the numeral **13**, is supported upon the frame **12** in cooperation with the sewing machine **11**. The conveyor assembly **13**, as illustrated, includes a driving roller assembly **14** and a driven roller assembly **15**, each rotatably mounted upon the frame **12** by suitable supporting apparatus **16**. Entrained about the rollers **14** and **15** is a plurality of endless belts **17** whose upper surfaces **18** form, in combination, the upper run **20** of the conveyor apparatus **13**.

A motor and clutch unit **21**, commonly referred to as a transmitter or electro-drive, is provided for driving the sewing machine **11** and conveyor assembly **13**. Any of a number of suitable transmitters may be employed for this purpose or, if desired, separate transmitters may be utilized to drive the sewing machine **11** and the conveyor assembly **13**. An example of a suitable transmitter assembly and conveyor and sewing machine driving arrangement is described in the United States Patent No. 3,192,885 to Timm. As shown, transmitter **21** includes a clutch controlling solenoid **22** suitably mounted as by a bracket **23** affixed to the electro-drive **21**. A clutch lever **24** is pivotally connected at one end thereof to the armature of the solenoid **22** as by connecting rod **25**. A foot operated switch **26** is connected by a cable **27** to a switch box **18** supported upon the supporting frame **12**. The switch box **28** houses a power pack composed of a number of electrical control components, effective to control the operation of transmitter **21**, as will be more fully described hereinafter.

The transmitter or electro-drive **21** provides motive power to the sewing machine **11** via a transmitter drive shaft (not shown). A sewing machine drive shaft **31** is coupled to a speed reduction unit **30** for providing motive power to the speed reduction unit. A belt and pulley system, generally indicated by the numeral **32** interconnects the speed reduction unit **30** with a conveyor assembly drive shaft **33**, suitably coupled as at coupling **34** to the driving roller assembly **14** for providing motive power to the conveyor assembly **13**. The speed of linear movement of the upper run **20**, right to left as viewed in FIGURE 2, is synchronized with the feeding speed of the sewing machine **11** as described in the aforementioned United States patent to Timm.

An upper clamping conveyor assembly, generally indicated by the numeral **35**, includes an endless belt **36** entrained about freely rotatable rollers **37, 38**. The belt **36** includes a lower run **40** which is contiguous with the upper run **20** of the lower conveyor assembly **13**.

An upper clamping conveyor supporting assembly includes a frame **41** upon which are mounted the freely rotatable rollers **37, 38**. Preferably, the supporting frame **41** includes means for the adjustment of the tension of the endless belt **36**. As shown, a slot **42** is provided in the frame **41** to allow the adjusting of the position of roller **37** for purposes of increasing and decreasing belt tension. Furthermore, the frame **41** may support a number of intermediate supporting rollers **43** for supporting the lower run **40** of the upper clamping conveyor **35** along the length thereof. The conveyor support frame **41** is mounted for movement parallel to the feeding direction of upper run **20** of conveying assembly **13**. The support frame **41** is slidably mounted upon a pair of supporting rods **49** as, for example, by a pair of brackets **44** and **45** including a plurality of bearing bushings **46** slidingly secured to the supporting rods **49**. Supporting rods **49** are substantially parallel to the upper run **20** of the conveying assembly **13**. Thus, if the supporting frame **41** is displaced upstream with respect to the upper run **20**, the lower run **40** of conveyor belt **36** is maintained in contact with the upper run **20** or work pieces positioned thereon and, as a result, the speed of movement of belt **36** about the freely rotatable rollers **37, 38** is greatly increased while there is no speed differential between the upper run **20** of the lower conveyor assembly **13** and the lower run **40** of the belt **36**.

The supporting rods **49** are received at their ends in suitable supporting brackets **47, 48** affixed to an elongate beam **50**. The beam **50** is supported by a pair of generally horizontally disposed cross members **51, 52** which, in turn, are secured to pivot plates **53, 54** respectively. Plates **53, 54** are pivotally supported upon a fulcrum rod **55** constrained against endwise movement thereon as, for example, by collars **56**. A pair of coil springs **57, 58** interconnect the free ends of the pivot plates **53, 54** and the frame **12** to bias the free ends of the pivot plates downwardly. The coil springs **57, 58** are connected to the frame **12** by suitable vertically adjustable connecting members **60, 61**.

The cross member **51** and its associated pivot plate **53** cooperate to form a lever arm pivotable about the fulcrum rod **55**. The cross member **52** and its associated pivot plate **54** form a similar lever arm. Downward vertical adjustment of the connectors **60, 61** increases the bias applied to the free ends of the aforementioned lever arms and, thus, decreases the downward force applied to the upper run **20** of the conveyor assembly **13** resultant from the weight of the upper clamping conveyor assembly **35**. Thus, upon interpositioning of work pieces between the upper run **20** of the conveyor assembly **13** and the lower

run 40 of the clamping conveyor 35, the downward pressure upon such work pieces may be adjusted to a suitable level. Further, the bias of the springs 57, 58 prevent binding between the relatively movable parts of the clamping conveyor supporting apparatus.

A fluid driven actuator generally indicated by the numeral 62 is provided for moving the upper clamping conveyor assembly 35 upstream in opposition to the direction of movement of the upper run 20 and downstream with the movement of such upper run. The actuator 62 includes, preferably, an air actuated cylinder 63 having an extensible and retractible piston rod 64 for imparting motion to the clamping conveyor 35 via a downwardly projecting bracket or plate 65. The actuator 62 may be supported upon the beam 50 as by suitable connecting means 66, 67. The operation of actuator 62 and the resultant movement of the upper clamping conveyor 35 will be set forth more fully hereinafter.

A work piece loading platform, generally indicated by the numeral 70, is fixedly attached to the upper clamping conveyor assembly 35 for movement therewith. A connecting bracket 71 secures the work piece loading platform 70 to the frame 41. The bracket 71 includes a horizontally disposed portion 72 affixed to the platform 70 and a generally vertically disposed portion 73 which is connected to frame 41 via a pair of connecting bolts 74, 75 and spacers 76, 77. The platform 70 is supported for movement upon a pair of generally longitudinally disposed supporting rods 80, 81 which, in turn, are supported above frame 12 by suitable supporting members such as bracket members 82, 83, 84 and the upright support member 85. The longitudinally disposed supporting rods 80, 81 are arranged parallel to the direction of movement of the upper run 20 and support brackets 87 containing bushings 86 are slidably disposed upon the support rods 80, 81 and connected to the work piece loading platform 70 for supporting the platform for movement in a path parallel to and slightly above the feeding path of the upper run 20.

As viewed in FIGURE 6, a work piece guiding device, generally indicated by the numeral 90 is disposed intermediate the work piece loading platform 70 and the movable upper conveyor 35. The work piece guiding device is mounted for movement with the platform 70 and the clamping conveyor assembly 35 and, as shown, may be conveniently mounted upon the connecting bracket 71. The work piece guiding device 90 includes a lower guide plate 91 and an upper guide plate 92, which guide plates 91, 92 define a space 93 therebetween. The guide plates 91, 92 are disposed adjacent the downstream edge of the loading platform 70 such that the space 93 lies in the path of movement of the edge portion of a work piece as the work piece is fed from the loading platform 70 onto the upper run 20 of the lower conveyor assembly 13. A number of mounting studs 94 are fixedly attached to the upper surface of the lower guide plate 91. The studs 94 loosely receive the upper guide plate 92 in suitable apertures provided therein. A fluid driven actuator 95 is connected to the upper guide plate 92 for imparting limited downward movement to the upper guide plate upon the passage of an edge portion of a work piece through the space 93 defined by the guide plates 91, 92. Preferably, the fluid driven actuator 95 includes an air operated cylinder 96 mounted upon the upright portion 73 of the connecting bracket 71. A movable piston rod 97 is connected to the upper guide plate 92 by suitable connecting means. An adjustable nut 98 may be provided upon the piston rod 97 to allow adjustment of the final position of the upper guide plate 92 when such guide plate is driven downwardly by the fluid actuator 95.

Upon the passage of a work piece edge portion through the space 93 of the guide device 90 the fluid driven actuator 95 is operated, in a manner to be set forth more fully hereinafter, to apply a slight retarding force or drag to the edge portion of the work piece. Such slight retarding force assures proper alignment of the edge portion of the work piece with the edge guide of the sewing machine 11. That is, upon the application of the aforementioned slight retarding force, the work piece which is in transit from the loading platform 70 onto the upper run 20 tends to move as far as possible toward the sewing machine side of the sewing unit. Accordingly, the edge guide 90 assures proper alignment of that edge portion of the work piece which is to be stitched by the sewing machine 11.

Referring now to FIGURE 7, drive control means, generally indicated by the numeral 100, control the power input to the sewing machine 11 and the conveyor assembly 13. Electrical power is supplied to the transmitter or electrodrive 21 from a suitable electrical source 101 which may be any suitable source matched to the needs of the transmitter 21, but which is illustrated for exemplary purposes as including a three phase, 220 volts, 60 cycle source connected to the transmitter 21 via a main switch 102 and properly slected fuses or circuit breakers 103.

A clutch solenoid actuating signal is provided to the clutch solenoid 22 from a signal source 104 via a circuit including leads 105 and 106. A relay 107 completes the circuit to the clutch solenoid 22 upon closure of the relay contacts 108, 109. Closure of the contacts 108, 109 of the relay 107 energizes the clutch solenoid 22 to cause engagement of the clutch of the transmitter 21 and to thereby provide power to the sewing machine 11 and the conveyor assembly 13. The relay 107 may be manually actuated by the closure of the normally open switch 26, corresponding to switch 26 in FIGURE 2 to connect the relay coil 112 with a suitably chosen electrical source 113. The relay coil 112 is electrically connected to a relay contact 114 which, in turn, is connected to the normally open switch 26.

For automatic operation, the normally open switch 26 is manually closed to energize the relay coil 112 to close a contact arm 115 upon the contact 114. A relay 117, upon energization of the relay coil 118, interconnects the signal source 104 with the relay coil 112 of the relay 107 via a pair of contacts 120, 121 and a normally closed manually operable switch 122. Thus, if the relay coil 118 of the relay 117 is energized when the normally open manually operable switch 26 is closed the relay 107 operates as a holding relay and maintains the armature of the clutch solenoid 22 in its clutch-engagement position.

A scanner 123, including a light source 124 and a photo-sensitive device or photoelectric cell 125 is connected to the coil 118 of the relay 117 for energization thereof. The scanner 123 may be any of a number of commercially available units such as, for example, a Farmer PT–5 scanner unit.

The light source 124 and the photo-cell 125 are mounted upon the sewing unit 10 immediately preceding the sewing zone of the sewing machine 11 (best seen in FIGURE 2) for sensing the entrance of a work piece portion into the sewing zone. As illustrated, the scanner 123 is set for dark-operation mode whereby, upon the presence of a work piece portion below the sensor comprising the light source 124 and the photo-cell 125, insufficient light will be reflected into the photo-cell 125 and the scanner 123 will energize the coil 118 of the relay 117. Thus, prior to the entrance of a work piece into the sewing zone of the sewing unit 10, the normally open switch 26, corresponding to switch 26 shown in FIGURE 2, may be closed by the sewing unit operator and, subsequently, upon the entrance of the work piece into position below the sensor comprising the light source 124 and the photo-cell 125, the relay coil 112 of the relay 107 will be energized from the source 104 to cause the relay 107 to function as a holding relay whereupon the normally open switch 26 may be released and automatic operation of the sewing unit 10 is achieved. A timer unit

126, which may be incorporated into the scanner 123, may be employed to assure continuing automatic operation of the sewing unit 10 by assuring energization of the relay coil 118 of the relay 117 during the period corresponding to the space between the trailing edge of a work piece and the leading edge of an immediately following work piece.

The timer 126 would, of course, be adjusted to allow automatic operation for periods of time corresponding to the normal spacing between work pieces.

It is to be understood that the control drive 100, defined hereinbefore, illustrates only a preferred embodiment of such control means inasmuch as variations thereof may easily be attained by one skilled in the art. For example, the photoelectric cell 125 may be arranged for direct reception of light from the light source 124. Furthermore, while the sources 104 and 113 are illustrated as being 110 volt 60 cycle sources, such values are limited only by the requirements of the clutch solenoid 22, the relay coils 112, 118 and the scanner 123. Indeed, the employment of equivalent electronic circuitry for the relays 107 and 117 may demand energizing signals widely varying from those illustrated. It is not uncommon for such equivalent electronic circuit to employ zero volt or D.C. signals to initiate operation thereof.

There is shown in FIGURE 7 a second control means 130 for controlling the movement of the upper conveyor assembly 35, the work piece loading platform 70 and the work piece edge guide device 90. The fluid driven actuator 62 which controls the longitudinal movement of the upper clamping conveyor 75, the platform 70 and the guide device 90 has fluid supplied thereto by a fluid supply system 131. The system 131, as illustrated, includes an air line 132 and a suitable air filter-lubricator pressure regulator unit 133 connected in fluid communication to an electrically operable four-way valve 134. The valve 134 is alternatively operable to supply air to the air cylinder 63 via line 135, check valve 136 and port 137 or line 138, check valve 140 and port 141.

The insertion of air into the cylinder 63 through the port 137 causes the piston rod 64 to move rightwardly as seen in FIGURE 2 and to thereby retract the conveyor assembly 35 and the loading platform 70 away from the sewing machine 11. The check valve 136 may be adjusted to provide the desired speed of retraction of the upper clamping conveyor and the work piece loading platform. Similarly, the insertion of air into the cylinder 63 through the port 141 causes the piston rod 64 to move the upper conveying assembly 35 and the loading platform 70 toward the sewing machine 11. When properly adjusted, the check valve 140 causes the leftward movement of the upper conveyor 35 and loading platform 70 to be equal to the leftward movement of the upper run 20 of the lower conveying assembly 13.

The four-way valve 134 includes a valve solenoid 142 operable to cause the four-way valve to alternatively interconnect the air line 132 with the line 135 or to connect the air line 132 with the line 138. Upon the application of a retract signal to the valve solenoid 142 the four-way valve 134 interconnects the air line 132 and the line 138. The retract signal necessary to such operation is provided by a signal source 143 via a pair of contacts 144, 145 of the relay 146, the contacts 147, 148 of the relay 150 and the lead 151 connected to the valve solenoid 142. A pair of scanners 152, 153 control energization of the relay coils 154, 155, respectively. The scanners 152, 153 may be any of a number of commercially available scanners and a pair of Farmer PT–3 units are suitable for such use.

The scanner 152 includes a light source 156 and a photo-sensitive device or photo-electric cell 157 and the scanner 152 is adjusted for the light-operation mode. The light source 156 and the photo-electric cell 157 are attached to the work piece loading platform 70 by suitable fastening means such as bracket 159. The light source 156 and the photo-electric cell 157 are positioned upon the platform 70 to provide a sensor responsive to conditions at the end of the platform 70 nearest the sewing machine 11. Thus, when a sewing unit operator is positioning a work piece upon the work piece loading platform 70, just prior to the insertion of the edge portion of the work piece into the guide device 90, the operator's hands block the light path from the light source 156 to the photo-electric cell 157 to darken the photo-electric cell and thus preclude the communication of a retract signal from the signal source 143 to the valve solenoid 142. Upon removal of the operator's hands or other light blocking objects from the light path of the light source 156 and the photo-electric cell 157, the coil 154 of the relay 146 is energized by the scanner 152, thus connecting contacts 144 and 145.

The scanner 153 includes a light source 158 and a photo-sensitive device or photo-electric cell 160 which source and cell are positioned adjacent the downstream end of loading platform 70 as by connection to the upright portion 73 of the connecting bracket 71 by suitable connecting means such as a mounting bracket 161. The scanner 153 is adjusted for the dark-operation mode and, once the sewing unit operator has moved a work piece past the downstream end of the loading platform 70 into the sensing area of the sensor comprising the light source 158 and the photoelectric cell 160, the amount of light reflected to the photoelectric cell 160 from the work piece is insufficient to preclude the scanner 153 from energizing the coil 155 of the relay 150.

It will be noted that inasmuch as the contacts 144, 145 of the relay 146 and the contacts 147, 148 of the relay 150 are connected in series, the presentation of a retract signal to the valve solenoid 142 requires the energization of both relay coils 154 and 155. Accordingly, before the upper clamping conveyor 35 and the work piece loading platform 70 can be retracted away from the sewing machine 11, a work piece must be fed from the downstream end of the platform 70 onto the conveyor run 20 and the sewing unit operator's hands must be removed from the downstream portion of the platform.

The fluid driven actuator 95 which controls the movement of the upper guide plate 92 may be automatically actuated upon the insertion of an edge portion of a work piece into the space 93 between the lower guide plate 91 and the upper guide plate 92. The air line 132, including the air filter, lubricator, pressure regulator unit 165, provides air to the air cylinder via the two-way valve 166, the line 167 and the port 168 to extend the piston rod 97 downwardly thus moving the upper guide plate 92 to decrease the space 93. The two-way valve 166 includes a valve operating solenoid 170 which, upon the application of a signal thereto, causes the two-way valve 166 to interconnect the air line 132 with the air cylinder 96.

Valve operating signals are presented to the valve operating solenoid 170 by a signal source 171 via a lead 172, a pair of contacts 173, 174 of a relay 175 and a lead 176 connected to the valve solenoid 170.

The scanner 153 may be utilized to cause energization of the valve solenoid 170. The sensor comprising the light source 158 and the photo-electric cell 160 is positioned above the edge guide device 90 to sense the presence of a work piece edge portion in the surface 93 between the guide plates 91 and 92. Once a work piece edge portion is so positioned, the coil 155 of the relay 150 is energized and a pair of contacts 177, 178 are closed to connect the signal source 171 with a contact 180 of the relay 175 via the normally closed manually operable switch 181. The normally open manually operable switch 182 interconnects the contact 180 with a contact 183 which is electrically connected to the coil 184 of the relay 175. The normally open switch 182 need be closed only instantaneously inasmuch as the closure of the contacts 180 and 183 assures energization of the coil 184 thus

causing the relay **175** to act as a holding relay. It will be noted that the closure of the normally open switch **182** is ineffective to cause energization of the valve solenoid **170** when there is no work piece positioned in the space **93** of the guide device **90** inasmuch as the coil **184** of the relay **175** cannot be energized without a prior energization of the coil **155** of the relay **150**. Further, it will be noted that retraction of the piston rod **97** and the attached upper guide plate **92** may be effected by the manual opening of the normally closed switch **181** inasmuch as such manual opening deenergizes the relay coil **184** to open the valve solenoid circuit at the contacts **173, 174**.

As with the drive control means **100**, it should be apparent that many variations in the control means **130** are possible within the purview of one skilled in the art. Here again, the sources **143** and **171**, while illustrated as 110 volts, 60 cycle sources, may be suitably chosen with the requirements of the solenoids **142** and **170** in mind. The use of electronic equivalents of the relays shown may demand the utilization of differing signal sources and the scanners **152** and **153** may be adapted to utilize either direct or reflected light from their respective sources.

In operation, a work piece comprising first and second superimposed plies of material is prepared for sewing upon the platform **70** and positioned for insertion through the space **93** of the guided device **90**. At this time the upper clamping conveyor **35** and the work piece loading platform **70** are positioned at their extreme downstream positions with respect to conveyor run **20**. The sewing unit operator moves the leading edge of the work piece onto the upper run **20** and, in so doing, inserts the edge of the work piece which is to be sewed between the plates **91, 92** of the guide device **90**. The normally open treadle switch **26** is then closed and the clutch portion of the transmitter **21** engages to supply power to the sewing machine **11** and the lower conveyor assembly **13**. The clutch solenoid **22** is energized from source **104** only if the treadle switch **26** is maintained closed to actuate the relay **107**. However, once the lower conveyor assembly **13** has carried the work piece into the sensing zone of the sensor comprising the light source **124** and photo-electric cell **125**, automatic operation of the lower conveyor assembly **13** and the sewing machine **11** ensues as described hereinbefore with respect to drive control means **100** shown in FIGURE 7.

As the first work piece moves onto the surfaces **18** of the upper run **20** the work piece is clamped to such upper run by the lower run **40** of the upper clamping conveyor assembly **35**. Inasmuch as the belt **36** of the upper clamping conveyor assembly **35** is freely rotatable, the lower run **40** of such belt will follow the downstream movement of the conveyor run **20** and the work pieces positioned thereon.

As the edge of the work piece moves through the guide device **90**, the sewing unit operator "hits" the normally open manually operable switch **182** which may be conveniently located upon the platform **70** as shown in FIGURE 5. Closure of the normally open switch **182** results in the downward movement of the upper guide plate **92** to decrease the space **93** of the guide device **90** and thereby creates the aforementioned slight retarding force or drag upon the edge portion of the work piece. Downward movement of the upper guide plate **92** is effected by the fluid driven actuator **95** as set forth hereinbefore with respect to the operation of control means **130** shown in FIGURE 7. The positioning of the sensor comprising the light source **158** and the photo-electric cell **160** upon the upright portion **73** of the connecting bracket **71** is such that the work piece crosses the light beam in substantially the same horizontal plane as that in which the upper belt **36** contacts the upper face of the work piece.

Once the sewing unit operator finishes guiding the initial work piece into the guide device **90** and onto the upper run **20**, the operator's hands are removed from the downstream end of the work piece loading platform and the light beam path between the light source **156** and the photo-electric cell **157** is completed. At this time the scanners **152** and **153** energize the relay coils **154** and **155** respectively to cause actuation of the fluid driven actuator **62** as described hereinbefore. The fluid driven actuator **62** acts, through its connection to the support frame **41** of the upper clamping conveyor **35**, to retract the upper clamping conveyor **35** and the work piece loading platform **70** away from the sewing machine **11**. Because of the freely rotatable nature of the belt **36** of the upper clamping conveyor **35**, the upper conveyor rolls upstream across the upper face of the initial work piece. As a result of the upstream movement of the clamping conveyor **35** and the platform **70**, the platform **70** moves out from under the initial work piece and a substantial area of the platform **70** is quickly cleared for the preparation of a second two-ply work piece.

Upon passage of the trailing or final portion of the work piece edge through the guide device **90**, the sensor comprising light source **158** and photo-electric cell **160** detects the absence of an edge portion of the work piece in the space **93** and, accordingly, the retract signal supplied to the valve solenoid **142** is terminated and the valve **134** is actuated to its initial position to supply air to the air cylinder **63** via line **138**, check valve **140** and port **141**. By suitable adjustment of the check valve **140**, the amount of air fed to the air cylinder **63** causes the piston rod **64** to move the upper clamping conveyor **35**, guide device **90** and work piece loading platform **70** in a downstream direction at a speed substantially equal to the speed of movement of the upper run **20**. Thus, once a second work piece is properly prepared and positioned upon the platform **70**, the platform **70** and the associated guide device **90** will be in position to feed such second work piece onto the conveyor run **20** immediately following the trailing edge of the initial work piece.

The leading edge of the second work piece is fed into the space **93** of the guide device **90** as set forth hereinbefore with respect to the initially prepared work piece. The edge portion of the second work piece interrupts the light beam of the sensor comprising the light source **158** and the photo-electric cell **160**. Upon removal of the operator's hands from the downstream end of platform **70**, the upper clamping conveyor **35**, guide device **90** and work piece loading platform **70** moves upstream to again clear platform **70** for the further preparation of work pieces thereon.

It will be noted that as the operator's hands are moved upstream in the preparation of a work piece positioned upon the platform **70**, the movable components controlled by the control means **130** closely follow such upstream movement of the operator's hands due to the sensitivity of the scanner **152** and its associated circuitry to the positioning of the operator's hands with respect to the work piece loading platform **70**. Thus, while the upstream movement of the upper clamping conveyor **35**, guide device **90** and work piece loading platform **70** is controlled by the adjustment of the check valve **136**, the operator may control such upstream movement by the handling of that portion of the work piece which is about to be fed onto the conveyor run **20**.

The slight retarding force applied to the work piece as it is fed from the platform **70** onto the conveyor run **20** may be relieved by the manual opening of the normally closed switch **181**. Further, power input to the lower conveyor **13** and the sewing machine **11** may be terminated by the manual actuation of the normally closed switch **122** which, like switch **181**, is preferably positioned upon the loading platform **70** as shown in FIGURE 5. The opening of the normally closed switch **122** will, of course, not interrupt the electrical input to the transmitter or

electro-drive **21**, however, should this be desired, the main switch **102** may be tripped by the operator. Again, preferably, the main switch **102** is conveniently located upon the frame **12** as indicated in FIGURE 2.

The dimensions of the previously described sewing unit **10** will, of course, be determined by the size of the work pieces upon which the switching operation is to be performed. However, it should be noted that certain dimensional relationships between the cooperating components of the swing unit are preferred for best results in the sewing operation. Accordingly, the travel distance of the upper clamping conveyor assembly **35** should be at least one-half as long as the length of the seam to be effected by the swing unit **10**. The stroke of the fluid driven actuator **62**, then, should be chosen accordingly. Further, the length of the lower run **40** of the upper clamping conveyor assembly **35** should be at least as great as twice the required length of travel of such assembly. The utilization of a sewing unit **10** having its components dimensioned in accordance with the aforementioned requirements assures the proper clamping of the entire work piece and the proper guidance of such work piece into the sewing zone of the sewing unit. It will, of course, be evident that the dimensions of the work piece loading platform **70** must be suitable to accommodate the full length of the work piece which is to be sewed.

It is to be noted that many variations may be effected in the preferred embodiment of the present invention as hereinbefore described without actual departure from the spirit and scope of the present invention.

We claim:

1. Conveying apparatus for feeding work pieces through a work station in a conveying line comprising lower movable conveying belt means for supporting and moving work pieces thereon, upper clamping means having a lower surface contiguous with said lower conveying belt means and movable therewith for clamping said work pieces between said lower conveying belt means and upper clamping means, support means for supporting said upper clamping means, and means for moving said support means with and opposite movement of said lower conveying belt means.

2. Conveying apparatus according to claim **1** wherein said support means comprises a plurality of rollers, said upper clamping means comprising an endless belt entrained about said rollers, said means for moving said support means being adapted to cause said belt to roll upstream along said lower conveying belt and to cause said belt and said support means to move downstream with said lower conveying belt.

3. Conveying apparatus according to claim **1** further comprising a work piece loading platform displaced upstream from said upper clamping means and affixed thereto for movement therewith.

4. Conveying apparatus according to claim **1** wherein said means for moving comprises a fluid driven actuator connected to said support means and an electrically operable fluid supply valve in fluid communication with said actuator for providing fluid to said actuator to move said support means.

5. Conveying apparatus according to claim **3** further comprising work piece guide means intermediate said upper clamping means and said loading platform for guiding work pieces from said loading platform into position between said lower conveying belt and upper clamping means.

6. Conveying apparatus according to claim **1** wherein said means for moving said support means is adapted to move upper clamping means upstream with respect to said lower conveying belt and downstream at substantially the same speed as the speed of movement of said lower conveying belt.

7. Conveying apparatus for use in a sewing unit including a sewing machine and a lower conveyor having an upper run movable to feed work pieces past said sewing machine for stitching of said work pieces, comprising an upper clamping conveyor having a lower run contiguous with said lower conveyor upper run, upper conveyor supporting means movably supporting said upper conveyor for movement of said lower run in response to movement of said lower conveyor upper run and movement of said work pieces positioned on said upper run, motive means connected to said supporting means for moving said upper conveyor in a direction opposite to the direction of movement of said upper run away from said sewing machine while said upper conveyor lower run moves in cooperation with said upper run and for moving said upper conveyor with said upper run toward said sewing machine.

8. Apparatus according to claim **7** further comprising a loading platform structurally connected to said upper conveyor means for movement with said upper conveyor means toward and away from said sewing machine.

9. Apparatus according to claim **8** further comprising means controlling movement of said motive means including a sensing device responsive to conditions at said loading platform for preventing movement of said upper conveyor and loading platform away from said sewing machine.

10. Apparatus according to claim **9** wherein said sensing device comprises a photo-electric sensor responsive to the presense of an operator's hands adjacent the end of said loading platform nearest said sewing machine.

11. Apparatus according to claim **8** further comprising a work piece guiding device intermediate said upper conveyor and the loading platform for guiding the movement of said work pieces from said platform between said upper and lower conveyors.

12. Apparatus according to claim **11** wherein said work piece guiding device comprises a lower guide plate, an upper guide plate positioned above said lower guide plate to define a space therebetween, said upper and lower guide plates being positioned in the path of a portion of said work pieces for movement of said portion therebetween, and means for decreasing the space between said guide plates for exerting a retarding force on said work piece portion.

13. Apparatus according to claim **12** wherein said work piece guiding device further comprises means controlling said means for decreasing including a sensing device responsive to the presence of a work piece portion between said guide plates for initiating a decrease in the space between said guide plates.

14. Apparatus according to claim **7** further comprising biasing means connected to said conveyor supporting means for substantially overcoming the downward force applied to said work pieces by the weight of said conveyor supporting means and upper conveyor.

15. Apparatus according to claim **14** wherein said biasing means comprises at least one lever arm pivotally supported intermediate its ends and attached at one end thereof to said conveyor supporting means, and coil spring means attached to said lever arm at the remaining end for pivotally biasing the lever arm in opposition to the weight of said supporting means.

16. Edge guide apparatus for guiding a work piece onto a conveyor run comprising a lower plate, an upper plate disposed above said lower plate and defining a space therebetween positioned for the passage of an edge of said workpiece therethrough, means for moving one of said plates toward the other of said plates to exert a drag on the edge of said work piece, and means for controlling said means for moving one of said plates including a sensing device responsive to the presence of a work piece edge between said plates for initiating movement of said one of said plates.

17. Edge guide apparatus for guiding a work piece onto a conveyor run comprising a lower plate, an upper plate disposed above said lower plate and defining a space therebetween positioned for the passage of an edge of said work piece therethrough, means for moving one of said plates toward the other of said plates to exert a drag on the edge of said work piece, said means for mov-

ing one of said plates comprising a fluid driven actuator connected to said one of said plates for movement thereof and electrically operable valve means for supplying fluid to said actuator to move said one of said plates, and a sensing device being electrically connected to said valve means for control thereof.

18. Apparatus for use in a sewing unit including a sewing machine and a conveyor for feeding work pieces past said sewing machine for stitching by said sewing machine, comprising a loading platform, loading platform support means movably supporting said loading platform for movement toward and away from said sewing machine in a path substantially parallel to and overlying said conveyor and motive means operatively connected to said platform for moving said platform in said path.

19. Apparatus according to claim **18** wherein said motive means comprises electrically operative means responsive to an electrical retract signal for moving said platform away from said sewing machine, said apparatus further comprising first sensor means responsive to the presence of a work piece intermediate said platform and said conveyor for producing a first signal indicative of such presence, second sensor means responsive to predetermined conditions at said platform for producing a second signal indicative of said predetermined conditions and means interconnecting said first and second sensor means and said electrically operative means for producing said electrical retract signal in response to both said first and said second signals.

20. Apparatus according to claim **19** wherein said electrically operative means comprises a fluid driven actuator operatively connected to said platform and electrically operable valve means for supplying fluid to said actuator in response to said retract signal.

21. Apparatus according to claim **19** wherein said interconnecting means fails to produce a retract signal in response to an absence of either of said first and second signals, said electrically operative means being responsive to the absence of a retract signal for moving said platform toward said sewing machine.

22. Apparatus according to claim **19** wherein said second sensor means is responsive to the presence of an operator's hands adjacent the end of said platform nearest said sewing machine.

23. Apparatus according to claim **18** further comprising work piece guide means affixed to said platform for guiding work pieces from said platform onto said conveyor, said guide means comprising a lower guide plate, an upper guide plate positioned above said lower guide plate to define a space therebetween, said upper and lower guide plates being positioned in the path of an edge portion of said work pieces for movement of said edge portion therebetween, and means for decreasing the space between said guide plates for exerting a retarding force on said work piece edge portion.

24. Apparatus according to claim **23** wherein said motive means and means for decreasing the space between guide plates are electrically controllable, said apparatus further comprising sensor means responsive to the presence of a work piece edge portion between said guide plates for controlling said motive means and said means for decreasing the space between said guide plates.

25. Apparatus according to claim **18** further comprising clamping means for clamping work pieces to said conveyor when said loading platform is moved away from said sewing machine.

26. Apparatus according to claim **25** wherein said clampmeans comprises upper conveyor means affixed to said platform for movement therewith, said upper conveyor means having a lower surface movable in cooperation with said conveyor.

27. Conveying apparatus for work pieces comprising a lower conveyor and an upper conveyor, said lower conveyor having an upper run movable to feed work pieces to a work station, said upper conveyor having a lower run spaced contiguous with said lower conveyor upper run, upper conveyor supporting means movably supporting said upper conveyor for movement of said lower run in response to movement of said lower conveyor upper run and movement of work pieces normally positioned on said upper run, motive means connected to said supporting means for moving said upper conveyor in a direction opposite to the direction of movement of said upper run, while said upper conveyor lower run moves in cooperation with said upper run, and for moving said upper conveyor with said upper run toward said work station.

28. Conveying apparatus as in claim **27** in combination with a work station including a sewing machine, said conveying apparatus comprising means for moving work pieces through said work station and past said sewing machine for stitching of said work pieces by said sewing machine.

References Cited

UNITED STATES PATENTS

1,126,584	1/1915	Spiess	271—46
2,483,138	9/1949	Helmer.	
2,616,690	11/1952	Haringx	226—195
2,674,965	4/1954	McInerney et al.	
2,700,947	2/1955	Wilson	112—10
3,013,513	12/1961	Judelson	112—2 XR
3,204,590	9/1965	Rockerath et al.	
3,227,344	1/1966	Rutter	226—195 XR
3,332,819	7/1967	Siepelkamp	271—54 XR
3,384,281	5/1968	Mason	226—195 XR

JAMES R. BOLER, Primary Examiner

U.S. Cl. X.R.

112—203; 198—165; 271—45; 226—195