US 20220042205A1

(19) United States

(12) Patent Application Publication (10) Pub. No.: US 2022/0042205 A1

WU (43) Pub. Date: Feb. 10, 2022

(54) **DEVICE AND METHOD FOR TRANSFERRING COTTON FIBER, AND DEVICE FOR REMOVING IMPURITY IN COTTON FIBER**

(71) Applicant: **HUBEI BAIAO TECHNOLOGY CO.,LTD.**, Tianmen (CN)

(72) Inventor: **Xuewen WU**, Tianmen (CN)

(21) Appl. No.: **17/507,976**

(22) Filed: **Oct. 22, 2021**

Related U.S. Application Data

(63) Continuation of application No. PCT/CN2020/119174, filed on Sep. 30, 2020.

(30) **Foreign Application Priority Data**

Oct. 25, 2019 (CN) 201911022232.6
Oct. 25, 2019 (CN) 201921806459.5

Publication Classification

(51) **Int. Cl.**
D01B 1/08 (2006.01)
D01G 9/06 (2006.01)

(52) **U.S. Cl.**
CPC ***D01B 1/08*** (2013.01); ***D01G 9/06*** (2013.01)

(57) **ABSTRACT**

A device for transferring a cotton fiber includes a cotton-fiber support plate, a first cover plate, a saw blade roller, a licker-in roller, and a second cover plate. A spacing between the saw blade roller and the licker-in roller and an arc of the saw blade roller covered by the second cover plate are adjusted such that the number of rotations required for transferring the cotton fiber is N. A device for removing an impurity in a cotton fiber is also provided by further adding an impurity-removing plate and an air compensation port to the above transferring device.

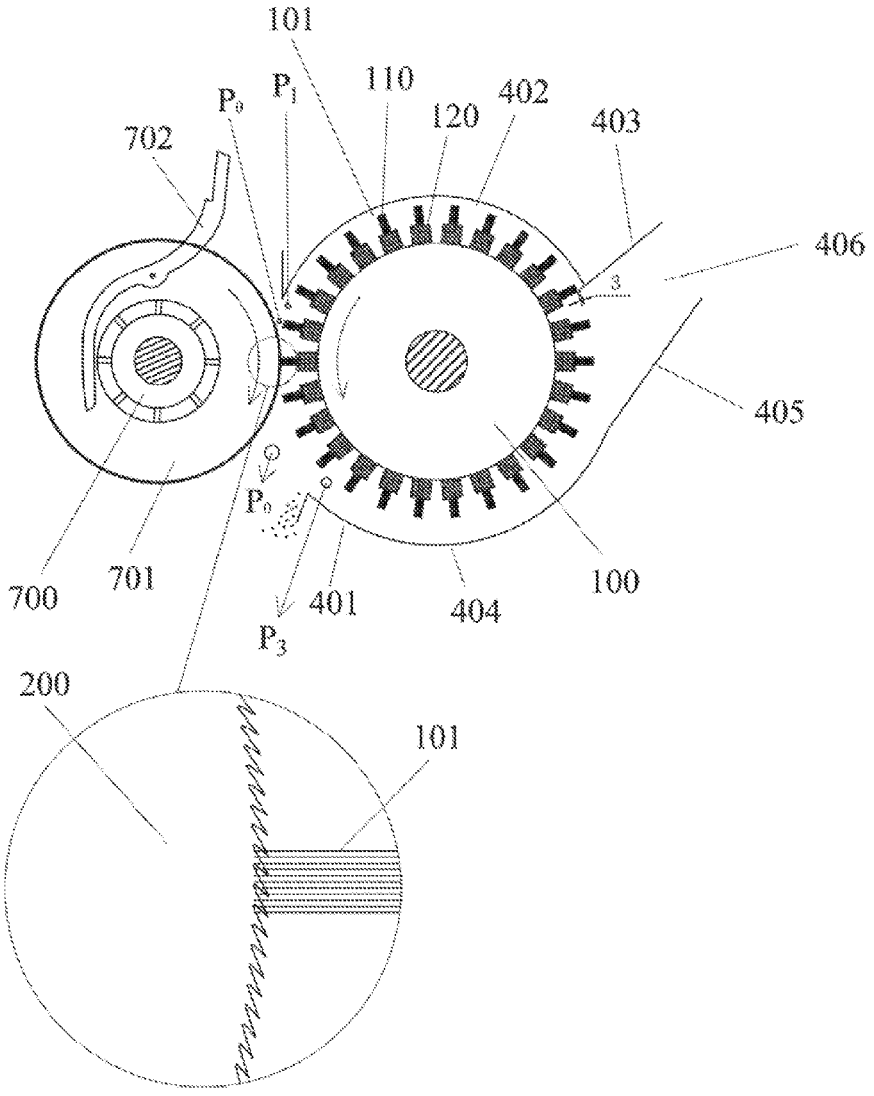

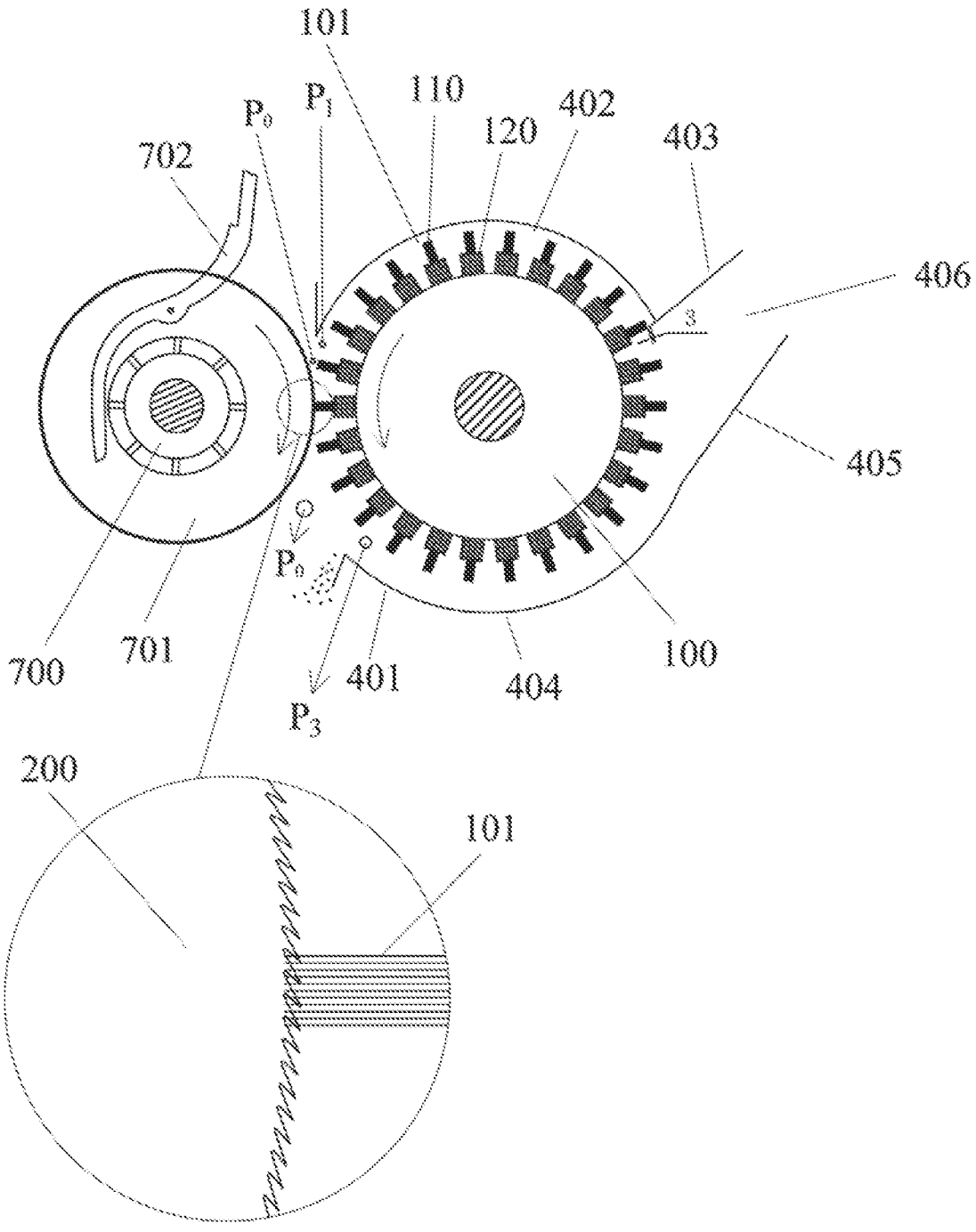
101
110
120
402
403
406
405
100
404
401
P1
P0
P0
P3
702
700
701
200
101

FIG. 1

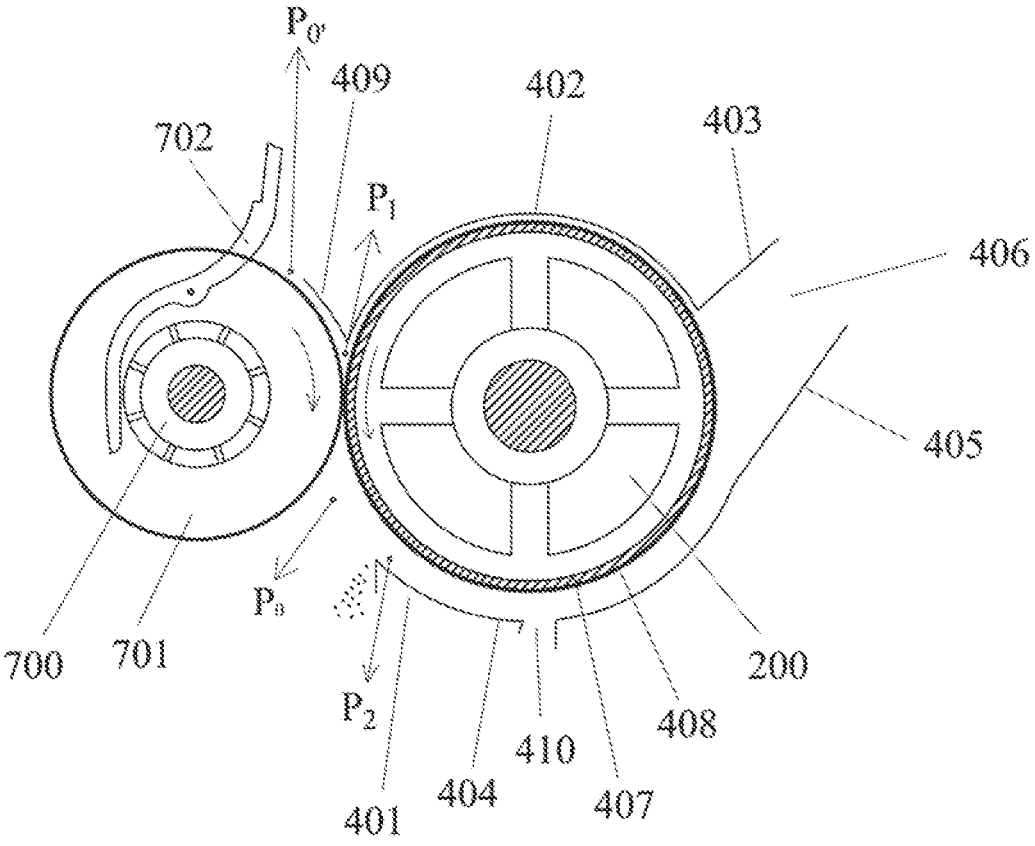
P0'
409
402
403
702
P1
406
405
P0
700
701
200
P2
408
410
404
407
401

FIG. 2

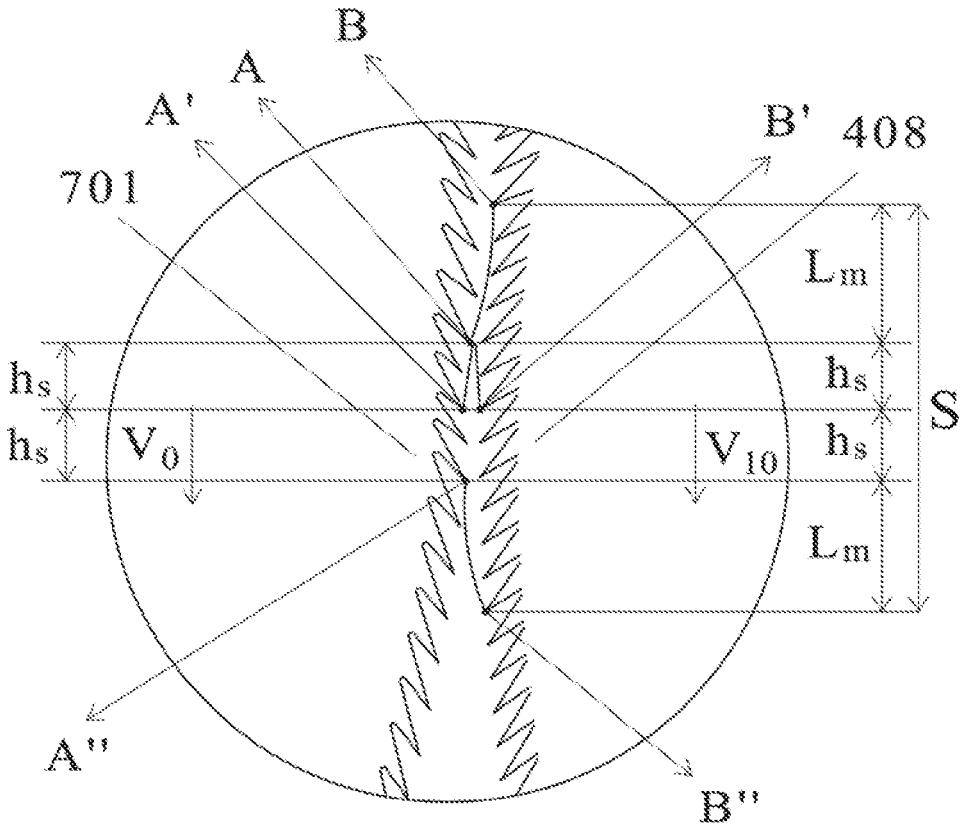

FIG. 3

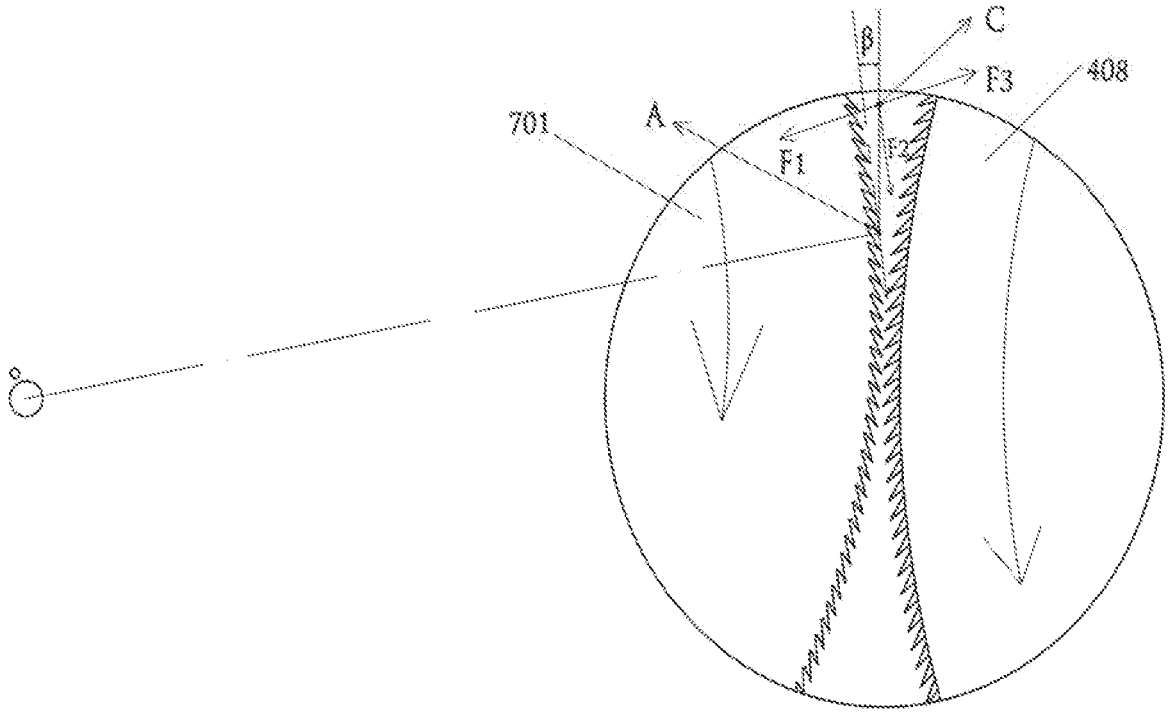

FIG. 4

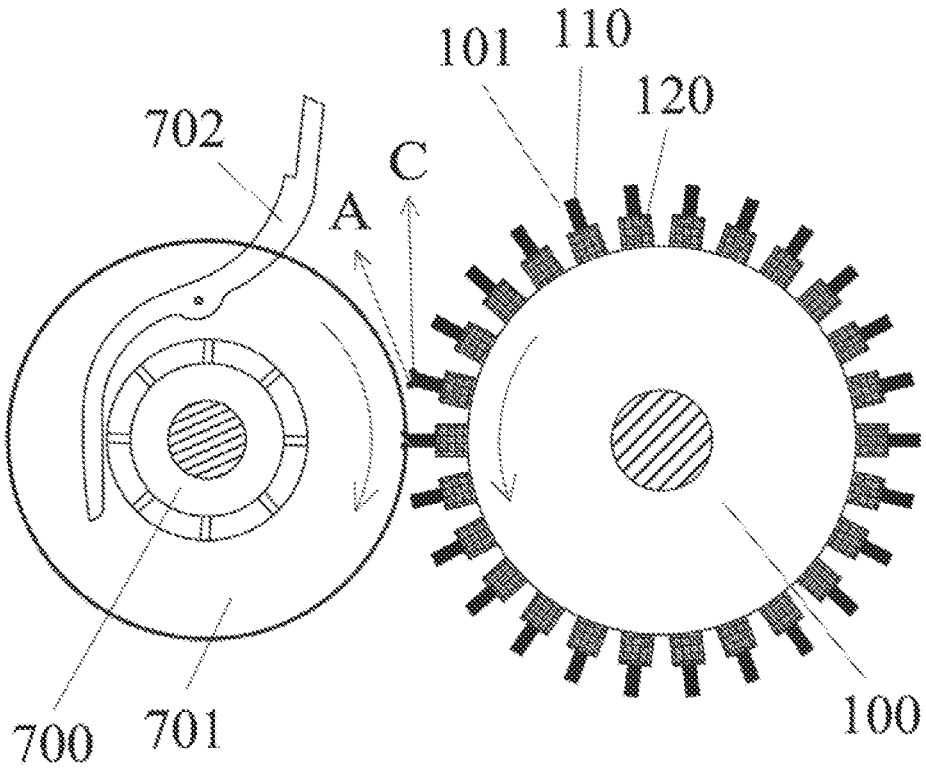
101
110
120
702
C
A
700
701
100

FIG. 5

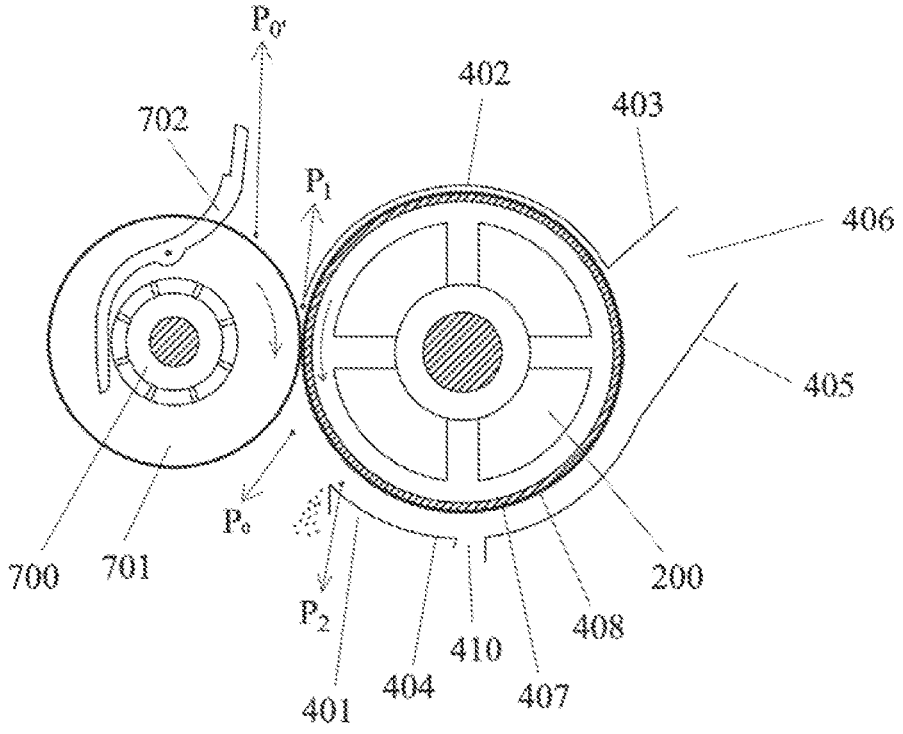
$P_{0'}$
402
403
702
P_1
406
405
P_0
700
701
200
P_2
408
410
404
407
401

FIG. 6

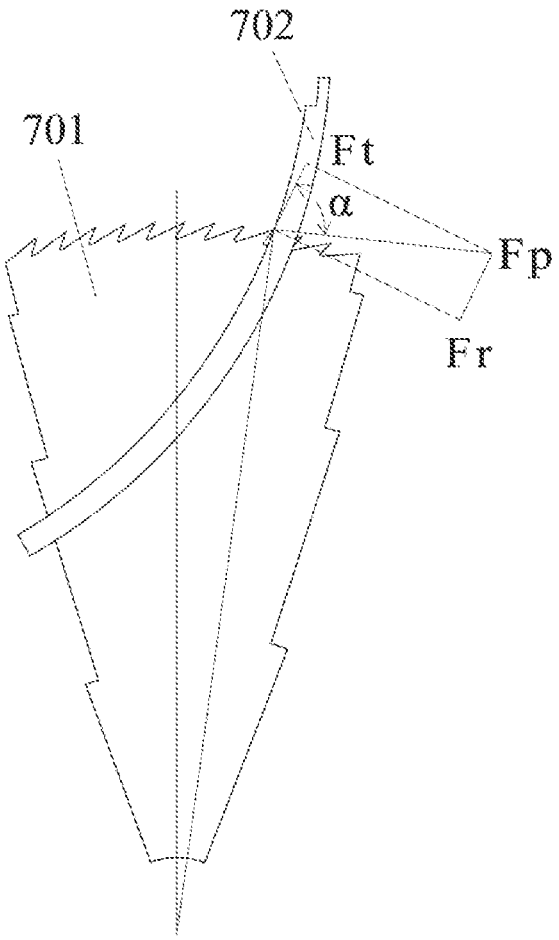

FIG. 7

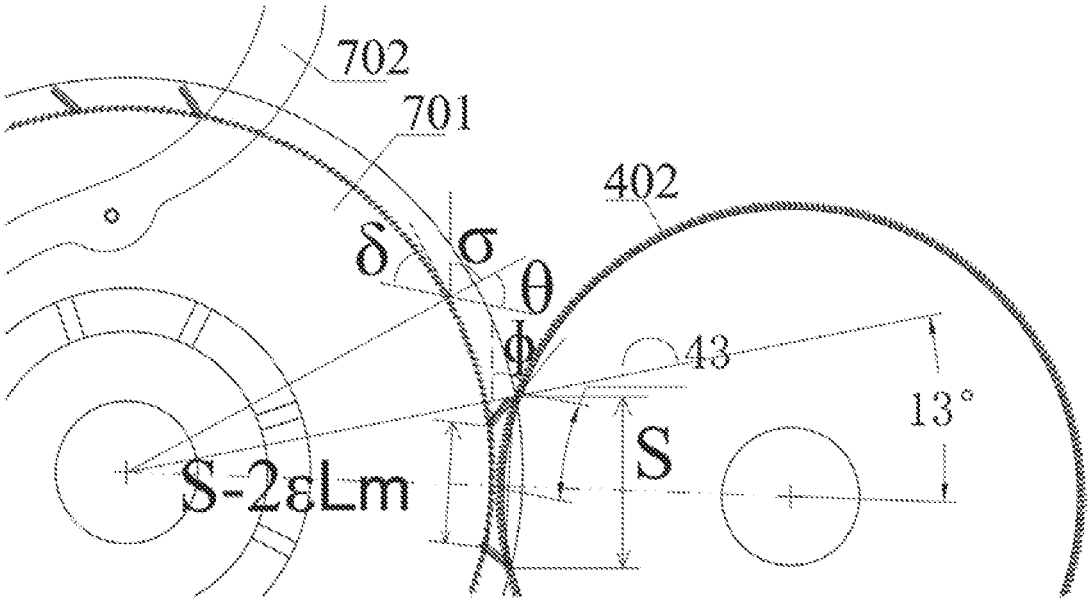

FIG. 8

DEVICE AND METHOD FOR TRANSFERRING COTTON FIBER, AND DEVICE FOR REMOVING IMPURITY IN COTTON FIBER

CROSS-REFERENCE TO RELATED APPLICATIONS

[0001] This application is continuation of International Patent Application No. PCT/CN2020/119174, filed on Sep. 30, 2020, which claims the benefit of priority from Chinese Patent Application Nos. 201911022232.6 and 201921806459.5, both filed on Oct. 25, 2019. The content of the aforementioned applications, including any intervening amendments thereto, is incorporated herein by reference in its entirety.

TECHNICAL FIELD

[0002] This application relates to mechanisms for primary processing of cotton, and more particularly to a device and a method for transferring a cotton fiber, and a device for removing an impurity in the cotton fiber.

BACKGROUND

[0003] Currently, saw ginning devices and saw delinting devices are main devices for primary processing of cotton, and their functions are described as follows.

[0004] For example, Chinese patent No. 203668559U discloses a saw ginning device including a saw blade roller and a brush roller. The saw blade roller pulls the cotton fiber to pass through a rib gap between to filter the cotton seed, and then the cotton fiber on the saw blade roller is brushed off by the brush roller and transported out of the saw ginning machine. The surface of the cotton seed processed by the ginning machine is still attached with dense linters, which account for about 6.7% by weight of the lint and are an important fiber source. At present, ginning factories usually carry out the mechanical delintion using a saw delinting device, such as a double-layer saw delinting device disclosed by Chinese patent No. 2009819000. The double-layer saw delinting device includes a saw blade roller and a brush roller. The linters on the cotton seed is delinted through the saw blade roller in a working box, and then the linters on the saw blade roller are brushed off and transported out of the device through the brush roller.

[0005] As shown in FIG. **1**, in the existing saw ginning device or saw delinting device, a spacer ring is arranged between adjacent saw blades of a saw blade roller. A thickness of the spacer ring is 7-20 mm, and a radius of the spacer ring is about 80 mm smaller than that of the saw blade. A thickness of the saw blade is 0.95 mm. A rib is arranged between the adjacent saw blades, and a distance between the rib and the adjacent saw blade is about 1 mm. The saw blade hooks the cotton fiber to pass through a rib gap, and the cotton fiber is transferred to a brush roller from the saw blade roller. It should be noted that the cotton fiber needs to be totally transferred to the licker-in roller, whereas the cotton fiber remaining on the saw blade roller will move to a working box with the rotation of the saw blade roller, and may float to the ground below the working box or back to the working box, which would cause some problems. For example, after working for a long time, the lower part of the ribs may be blocked by those cotton fibers, leading to abnormal working of the device and even causing a fire due to the longtime friction between the blocked cotton fiber and the saw blade. In addition, the cotton fiber floating to the ground under the working box brings the loss of cotton fiber and environmental pollution. Furthermore, the cotton fiber returned to the working box is pulled by the saw blade again, which causes neps and ropes, and affects the quality of the cotton fiber.

[0006] Since the friction coefficient between the brush and the cotton fiber is 0.35-0.4, which is close to the friction coefficient 0.3 between the saw blade and the cotton fiber, and thus a saw blade roller **700** and a brush roller **100** are arranged in a contact brushing manner. A brush **101** of the saw blade roller extends into the brush roller by 1-3 mm to facilitate the separation and transfer of the cotton fiber on the licker-in roller. However, the brush forcibly separates the cotton fiber on the saw blade, and the impurities that have been exposed on the saw blade roller will be recombined with the cotton fiber, which makes it difficult to separate the impurities from the cotton fiber. In addition, a distance between adjacent rolls of brushes is about 30 mm, which may cause the instantaneous accumulation of the cotton fiber in the gap between the brushes during the high-speed transfer process of the cotton fiber, hindering the separation of impurities. In the contact brushing manner, to avoid the fire caused by friction, the saw blade roller used herein almost has no gripping force on the cotton fiber and only provides a centrifugal force, leading to a low removing rate of the impurity. The discharged impurities are easy to carry effective fibers, causing loss of clothing fiber. In addition, the service time of the brush is short due to the longtime friction.

[0007] Currently, the non-contact brushing manner has not been used for transferring cotton fiber from the roller with the toothed brush.

[0008] The existing saw ginning device and saw delinting device may have the following problems.

[0009] 1. The efficiency for removing impurities is low, leading to a cost for adding an impurity-removing device. The cotton fiber processed by the existing saw ginning device and saw delinting device fails to meet the requirements of downstream users. According to the technical requirement GB/T19819-2005 of the saw ginning device and the technical requirement GB/T21306-2007 of the saw delinting device, a clear standard for the removing rate of the impurity in the cotton fiber is not put forward in the main performance of the device, which means the impurity-removing performance of the existing saw ginning device and saw delinting device is undesirable. To satisfied the downstream users, the lint processed by the existing saw ginning device needs to be further processed by a special lint cleaning device, such as GB/T 21208-2007; and the linters processed by the saw delinting device also need to be further processed a special linters cleaning device, such as GH/T1023-2000. Those cleaning devices largely increase the cost, such as the purchase cost, installation coast and maintaining cost.

[0010] 2. The existing saw ginning device and saw delinting device may cause large noise and serious air pollution, and require a dust-removing device. The saw ginning device and saw delinting device both include a saw blade roller and a rush roller. The brush roller is an important part in these devices, and is mainly configured to brush the processed cotton fiber and transfer out the cotton fiber from the devices. Generally, a rotation speed of the brush roller is

larger than 1000 rpm to totally clean and transfer the cotton fiber from the saw blade roller. However, air flow caused by the high-speed rotation of the brush roller will lead to severely friction with the surrounding mechanical components, generating a large noise. According to the technical requirement GB/T19819-2005 of the saw ginning device and the technical requirement GB/T21306-2007 of the saw delinting device, a no-load noise of the saw ginning device should not be greater than 90 dB(A) and a no-load noise of the saw delinting device should not be greater than 85 dB(A)". In addition, the high-speed rotation of the brush roller will blow up the dust on the cotton fiber. The brush roller sucks in a large amount of clean air, but discharges similarly sized dust-containing gas, causing serious air pollution. Therefore, an additional facility such as dust-removing pipeline, dust-removing fan and dust-removing tower with a processing capacity of about 6000 m^3/h is required for each saw ginning device and saw delinting device, resulting in the increase in the construction cost and energy consumption of the production line.

[0011] Therefore, the existing saw ginning device and saw delinting device that include a saw blade roller and a brush roller face the problems of low impurity-removing efficiency, large noise pollution and air pollution, and need to be improved.

SUMMARY

[0012] To solve the large noise pollution and air pollution caused by the saw ginning device and saw delinting device mentioned above, the present disclosure provides a device and a method for transferring a cotton fiber, and a device for removing an impurity in the cotton fiber. The brush roller mentioned above is replaced by a licker-in roller, and the contact brushing manner is changed to a non-contact brushing manner to reduce the abrasion of the roller, so as to effectively remove the impurity and reduce the noise pollution and air pollution.

[0013] The technical solutions of the present disclosure are described as follows.

[0014] In a first aspect, the present disclosure provides a device for transferring a cotton fiber, comprising:

[0015] a saw blade roller;

[0016] a licker-in roller;

[0017] an arc-shaped cotton-fiber support plate;

[0018] a first cover plate;

[0019] a guide plate;

[0020] a windscreen plate; and

[0021] two box plates arranged oppositely;

[0022] wherein the two box plates are respectively arranged at two ends of the licker-in roller and the saw blade roller; the first cover plate and the cotton-fiber support plate are arranged between the two box plates from top to bottom; a cylindrical cavity is enclosed by the cotton-fiber support plate and the first cover plate of the licker-in roller; an arc surface of the cylindrical cavity is provided with a first window and a second window arranged oppositely; the first window is communicated with an exit channel enclosed by the guide plate and the windscreen plate between the two box plates; the licker-in roller is arranged in the cylindrical cavity along an axial direction of the cylindrical cavity; an axis of the saw blade roller is parallel to an axis of the licker-in roller; the second window faces away from the exit channel; a gap between a surface of the saw blade roller and the licker-in roller is not greater than 5 mm; preferably 0.5-1 mm; a cotton fiber is capable of rotating with the saw blade roller to form a cotton-fiber floating layer; a linear speed of the licker-in roller is greater than a linear speed of the saw blade roller; and a rotation direction of the saw blade roller is opposite to a rotation direction of the licker-in roller to allow the cotton fiber to be transferred from the saw blade roller to the licker-in roller.

[0023] In a preferred embodiment, the saw blade roller is provided with a plurality of saw blades, an outer circumference of the plurality of saw blades is provided with teeth; two opposite side walls of the plurality of saw blades are respectively provided with a rib; the saw blade roller is configured to hook and pull the cotton fiber from between the ribs to form an initial floating layer with a thickness of $L_m \times \sin t$, wherein L_m is a length of the cotton fiber; ti is an angle between the cotton fiber and a tangent of the saw blade roller at an intersection of the hooked cotton fiber and the saw blade roller; $t=\theta=40\pm4°$; θ is an angle between an entrance side of the teeth of the saw blade roller and a normal plane of the teeth passing a top of the teeth.

[0024] In a preferred embodiment, a licker-in wire layer is evenly wound on an outer circumference of the licker-in roller; a gap between the first cover plate and the licker-in wire layer is no larger than 5 mm, preferably 0.2 to 3 mm; and a gap between the windscreen plate and the licker-in wire layer is no larger than 5 mm, preferably 0.2 to 3 mm.

[0025] In a preferred embodiment, an end of the first cover plate close to the saw blade roller is a starting end; and a distance from the starting end to the saw blade roller is larger than a thickness of the initial floating layer; a distance from the starting end to a line between a center of the saw blade roller and a center of the licker-in roller is larger than half of a length S of a common chord of a virtual circumference of the initial floating layer and a circumference of the licker-in roller; a ratio of the linear speed of the licker-in roller to the linear speed of the saw blade roller is no less than

$$\frac{S}{S-2\varepsilon L_m};$$

ε is an inclination coefficient of the cotton fiber; and ε is selected from 0.8-1.

[0026] In a preferred embodiment, an arc M of the surface of the saw blade roller between the rib of the saw blade roller and an end of the first cover plate close to the saw blade roller is 42°-180°.

[0027] In a preferred embodiment, the saw blade roller is provided with a plurality of second cover plates spaced apart; an end of each of the plurality of second cover plates is connected to the first cover plate; an arc M of the surface of the saw blade roller covered by each of the plurality of second cover plates is 42-180°; a distance between an end of each of the plurality of second cover plates close to the first cover plate and the surface of the saw blade roller is larger than 21 mm; and a distance between an end of each of the plurality of second cover plates away from the first cover plate and the surface of the saw blade roller is 3-10 mm.

[0028] In an embodiment, the number N of rotations of the cotton fiber rotating with the saw blade roller under the plurality of second cover plates is larger than $(M)/(2\Pi r_j)$, wherein r_j is a radius of the saw blade roller; a thickness B

of the cotton-fiber floating layer is calculated according to a critical diameter formula of a cyclone separator as follows:

$$B = \frac{d_c^2 \prod (M) 2 \prod r_j w \rho_s}{2 \prod r_j * 9\mu} = \frac{d_c^2 \prod (M) w \rho_s}{9\mu};$$

[0029] wherein w is a rotating speed of the saw blade roller, d_c is a diameter of the cotton fiber, ρ_s is a proportion of the cotton fiber in the cotton-fiber floating layer; and μ is a fluid viscosity of the air; and Π is Pi.

[0030] In an embodiment, a length S of a chord of the licker-in roller intersecting with the initial floating layer or the cotton-fiber floating layer under of the plurality of second cover plates is calculated as follows:

$$S = 2\sqrt{R_c^2 - \left(\frac{R_c^2 - (r_j + B)^2 + (r_j + R_c + x)}{2(r_j + R_c + x)}\right)^2};$$

[0031] in which B is the thickness of the initial cotton-fiber floating layer; R_c is a radius of the licker-in roller; r_j is a radius of the saw blade roller; and x is the distance between the surface of the barbed roller and the saw blade roller.

[0032] In a second aspect, device for removing an impurity in a cotton-fiber, comprising

[0033] the above-mentioned device for transferring a cotton fiber; and

[0034] an impurity-removing plate;

[0035] wherein the impurity-removing plate is arranged on a side of the cotton-fiber support plate close to the saw blade roller; the impurity-removing plate is detachably connected to the two box plates; the licker-in roller is capable of rotating with respect to the first cover plate to form a low pressure zone on a side of the plurality of second cover plates, so as to reduce an air resistance to the cotton fiber when the cotton fiber rotates centrifugally with the saw blade roller in the low pressure zone.

[0036] In an embodiment, the cotton-fiber support plate is provided with an air compensation port.

[0037] In an embodiment, an angle between a line connecting an end of the impurity-removing plate close to the saw blade roller to a center of the licker-in roller and a line connecting the center of the licker-in roller to a center of the saw blade roller is 20-60°; and a distance between an upper end of the impurity-removing plate and the licker-in roller is 15-45 mm.

[0038] In a third aspect, the present disclosure provides a method for transferring a cotton fiber using the device for transferring a cotton fiber, comprising:

[0039] rotating the saw blade roller carrying a cotton fiber with an impurity for N circles to form a cotton-fiber floating layer with a thickness of B;

[0040] rotating the licker-in roller to remove the impurity of the cotton fiber in the cotton-fiber floating layer hooked by the licker-in wire layer or the teeth through an impurity-removing plate; and

[0041] discharging the impurity and a residual cotton fiber through an exit channel; in which a cotton-brushing area with a length of S is formed on the licker-in roller intersecting with the cotton-fiber floating layer; the ratio of the linear speed of the licker-in roller to the linear speed of the saw blade roller is no less than

$$\frac{S}{S - 2\varepsilon L_m};$$

L_m is a length of the cotton fiber; S is larger than $2\varepsilon L_m$; ε is the inclination coefficient of cotton fiber; and ε is 0.8-1.

[0042] A mechanism for transferring a cotton fiber using the device provided herein is described as follows.

[0043] Internal reference materials show that the seed cotton moves with teeth towards a rib, and immediately changes the direction and speed of movement when hitting the rib. The seed cotton then moves upwards along a surface of the rib. The speed of the seed cotton at the working point of the seed cotton roll is the slowest, and is about 1.1-1.5 m/s. When the seed cotton is at the working point of the rib, the moment that the teeth pulls the fiber from the cotton seed, a running force Fp of a saw blade can be decomposed into two mutually perpendicular forces Fr and Ft. A direction of the Fp is consistent with a traveling direction of the teeth at a working point, and is perpendicular to a radial direction of the saw blade. The Fr is perpendicular to the rib, and is a force for the teeth at a working point of the rib to pull out a cotton fiber from the cotton seed. A direction of the Ft is parallel to the rib, and is a force for the teeth at the working point of the rib to drive a roll of the seed cotton to run. An angle between a tangent of the rib **702** at the working point and a tangent (Fp direction) of the saw blade **701** is a pressure angle. The pressure angle increases when the teeth **7011** pass through the working point of the rib **702**, which reducing an effect on the roll of the seed cotton to run upwards along a tangent function of the rib **702**. Since the roll of the seed cotton runs upwards along the tangent direction of the rib, an angle σ between the cotton fiber and a normal plane of the teeth **7011** passing through a top of the teeth **7011** is less than 90°, and a maximum value of an angle δ between the cotton fiber and an entrance side **70111** of a tooth is 90°. Referring to FIGS. **7** and **8**, the entrance side of the teeth is a side of the teeth close to the licker-in roller. Specifically, as shown in FIG. **7**, a right side of each tooth of the teeth is the entrance side of the corresponding tooth.

[0044] The saw blade roller is installed with saw blades with a centripetal angle, the teeth are provided on the circumference of the saw blade. The angle between the entrance side of the teeth and the normal plane passing the top of the teeth is θ=40°±4°, so that the maximum value of the included angle between the cotton fiber and the circumferential tangent of the saw blade is θ, that is, when the speed of the saw blade roller is extremely low or the side of the saw blade roller close to the barbed roller is a relatively negative pressure zone, when the cotton fiber rotates with the saw blade without facing air resistance, the fiber remains in the state when it is completely pulled off from the rib, σ=90°−θ, the thickness of the cotton-fiber floating layer is $L_m \times \sin$ θ=13.51-20.84 mm, and L_m is the length of the cotton fiber, with a value of 23-30 mm.

[0045] Since the distance x between the saw blade roller and the licker-in roller is preferably 0.5 mm, the virtual circle of the cotton-fiber floating layers formed on the saw blade roller intersects with the circumference of the licker-in roller and shares the chord length S, that is, the cotton brushing area. The thickness B of the cotton-fiber floating layer and the radius R_c of the licker-in roller are variables. According to the two circles with known radius and center distance, find the chord length S shared by the two circles. The radius R_c of the licker-in roller is 125-310.5 mm.

$$R_c^2 - z_1^2 = (r_j + B)^2 - z_2^2$$

$$z_1 + z_2 = r_j + R_c + x$$

$$S = 2\sqrt{R_c^2 - \left(\frac{R_c^2 - (r_j + B)^2 + (r_j + R_c + x)}{2(r_j + R_c + x)}\right)^2}$$

[0046] Z_1 and Z_2 are divided by the chord shared by the two circles, the length of each section connecting the centers of the two circles, and x is the surface distance between the saw blade roller and the licker-in roller.

[0047] The cotton fiber leaves the rib with the saw blade roller. When the linear speed of the saw blade roller is lower than 1.5 m/s, the thickness B of the cotton-fiber floating layer is 13.51-20.84 mm; when the linear speed of the saw blade roller exceeds the speed of 1.5 m/s, the cotton fiber is also subject to wind resistance, and the centrifugal force exerted by the saw blade roller on the cotton fiber.

[0048] The thickness of the cotton-fiber floating layer theoretically formed under the action of centrifugal force when the cotton fiber rotates with the saw blade roller at a high speed in the present disclosure:

[0049] According to the critical diameter formula of the cyclone separator,

$$d_c = \sqrt{\frac{9 * \mu * B}{\prod * N * u_i * \rho_s}},$$

the cotton fiber is equivalent to the separated particles, the diameter of a cotton fiber is d_c=15 μm, the average length of the cotton fiber is 28 mm, and the volume of the cotton fiber: 3.14*0.015 mm*0.015 mm*28=0.019782 mm^3, the specific gravity of cotton fiber ρ_s is 1.5 g/cm^3, μ=0.0186 mPa*s at 30° C., the number of rotations N of the cotton fiber on the surface of the saw blade roller is greater than $(M)/(2\Pi r_j)$, the radius of the saw blade roller is r_j, w is the speed of the saw blade roller, u_i is the tangential speed of particles and gas in the cyclone separator, which is equivalent to the linear speed of the cotton fiber as it rotates with the saw blade roller, $u_i=2\Pi r_j w$, B is the maximum thickness of the airflow through the particle settling process, which is equivalent to the thickness of the cotton-fiber floating layer,

$$B = \frac{d_c^2 \prod (M) 2 \prod r_j w \rho_s}{2 \prod r_j * 9\mu} = \frac{d_c^2 \prod (M) w \rho_s}{9\mu}.$$

[0050] According to the installation experience, the arc from the rib of the saw blade roller to the second cover plate of the licker-in roller is 42°-180°, and the diameter of the existing saw blade roller is 320 mm. $N>(M)/(2\Pi r_j)$, assuming that the cotton fiber is initially attached to the surface of the saw blade roller, the thickness B of the cotton-fiber floating layer produced when the saw blade roller rotates is shown in Table 1. The distance between the end of the second cover plate of the licker-in roller close to the saw blade roller and the surface of the saw blade roller is greater than the thickness B of the cotton-fiber floating layers.

TABLE 1

The distribution of the thickness B of the floating layer on the surface of the saw blade roller at different speeds of the saw blade roller

The thickness of the floating layer (mm)	2°	42°	52°	58°	62°	72°	92°	102°	112°	122°	142°	152°
w = 200 rpm	0.12	2.47	3.06	3.42	3.65	4.24	5.42	6.01	6.60	7.19	8.36	8.95
w = 350 rpm	0.18	3.71	4.59	5.12	5.48	6.36	8.13	9.01	9.89	10.78	12.55	13.43
w = 390 rpm	0.23	4.82	5.97	6.66	7.12	8.27	10.57	11.71	12.86	14.01	16.31	17.46
w = 400 rpm	0.24	4.95	6.13	5.98	7.30	8.48	10.84	12.02	13.19	14.37	16.73	17.91
w = 500 rpm	0.29	6.18	7.66	6.83	9.13	10.60	13.55	15.02	16.49	17.96	20.91	22.38
w = 600 rpm	0.35	7.42	9.19	8.54	10.96	12.72	16.26	18.02	19.79	21.56	25.09	26.86
w = 650 rpm	0.38	8.04	9.95	10.25	11.87	13.78	17.61	19.52	21.44	23.35	27.18	29.10
w = 700 rpm	0.41	8.66	10.72	11.96	12.78	14.84	18.97	21.03	23.09	25.15	29.27	31.33
w = 780 rpm	0.46	9.65	11.94	13.32	14.24	16.54	21.13	23.43	25.73	28.02	32.62	34.91

[0051] The centrifugal force exerted by the rotation of the saw blade roller on the cotton fiber offsets the resistance of the cotton fiber to the wind. The higher the speed, the longer the number of rotations, the more significant the offsetting effect. At the same time, laminar flow is formed on the surface of the licker-in roller when it rotates, and the distance between the second cover plate of the licker-in roller and the licker-in roller is extremely small, the laminar flow from the seed cotton fiber outlet channel is extremely small, when the licker-in roller rotates, downward airflow is generated below the intersection of the licker-in roller and the saw blade roller, so that the brush surface area above the intersection of the licker-in roller and the saw blade roller forms a low pressure zone or relative to the negative pressure zone, the resistance of the cotton fiber to the wind is further reduced, and the cotton fiber floating layer can maintain the thickness of the floating layer of the barbed roller when pulled off from the rib. Especially when the saw blade roller is close to the side of the licker-in roller and the ribs cover the saw blade rear cover plate, a vacuum zone is formed under the saw blade rear cover plate, and the cotton fiber is not subject to air resistance.

[0052] The principle of transferring and conveying the cotton fiber from the saw blade roller by the licker-in roller of the device provided herein is described as follows.

[0053] The cotton fiber separated by the saw blade roller rotates with the saw blade roller to form a cotton-fiber floating layer, the intersection of the licker-in roller and the cotton-fiber floating layers forms a cotton-brushing area. When the cotton fiber rotates to the cotton brushing area, the linear speed of the licker-in roller is higher. The friction between the second layer and the cotton fiber is greater than the friction between the brush and the cotton fiber, and the

cotton fiber is hooked and pulled straight by the licker-in wire layer on the surface of the licker-in roller in the cotton brushing area;

[0054] When the end of the cotton fiber away from the saw blade moves in the cotton brushing area for a time equal to or less than the time required for the hanging point of the cotton fiber and the saw blade to move with the saw blade to the arc length that passes when it leaves the saw blade, the linear speed ratio of the licker-in roller to the saw blade roller is enough to transfer all the cotton fibers on the saw blade to the licker-in roller, and without back cotton in this state. At the same time, it is required that the chord length S of the cotton brushing area corresponding to the licker-in roller is greater than twice the length of the cotton fiber. If S is less than $2L_m$, it means that when the cotton fiber leaves the saw blade roller, there is a non-negligible angle between the movement direction of the cotton fiber on the licker-in roller and the movement direction of the cotton fiber on the saw blade roller, causing the two ends of the cotton fiber are respectively hooked and pulled by the saw blade and the licker-in roller, causing difficulty in separation. Because the cotton fiber is not perpendicular to the center line of the saw blade roller and the barbed roller when it is just hooked by the licker-in roller during the transfer from the saw blade roller to the licker-in roller, and when it leaves the saw blade roller, the cotton fiber and the vertical line of the center line of the saw blade roller and the licker-in roller has an included angle φ, therefore, when the chord length S of the actual cotton brushing area corresponding to the licker-in roller is greater than twice the product of the cotton fiber length and the cotton fiber inclination coefficient c, the cotton fiber can still be completely transferred. Therefore, in the present disclosure, when S is greater than $2\varepsilon L_m$, it means that the cotton fiber can be transferred. When ε is 0.8-1, εL_m represents $L_m \cos \varphi$.

[0055] The chord S in the intersecting area of the circular cotton-fiber floating layer produced by the rotation of the saw blade roller and the licker-in roller is shown in Table 2. The chord length is approximately equal to the distance that the cotton fiber moves with the licker-in roller after being hooked by the licker-in roller.

TABLE 2

Chord (mm) The radius of the licker-in roller	The thickness of the floating layer (mm)														
(mm)	0.6	5	6	6.59	7	8	9	9.13	10	11.96	13.51	14.24	14.84	16.53	20.84
125	0.00	49.83	55.22	58.21	60.14	64.69	68.94	69.48	72.95	80.24	85.58	87.98	89.90	95.12	107.30
160	0.00	53.29	59.08	62.29	64.36	69.26	73.84	74.42	78.16	86.04	91.81	94.42	96.51	102.21	115.46
180	0.00	54.87	60.84	64.15	66.29	71.34	76.07	76.66	80.54	88.67	94.65	97.34	99.50	105.41	119.15
200	0.00	56.24	62.36	65.75	67.95	73.14	78.00	78.61	82.58	90.95	97.09	99.86	102.09	108.17	122.33
203	0.00	56.43	62.57	65.98	68.18	73.39	78.26	78.88	82.87	91.26	97.43	100.21	102.44	108.55	122.77
220	0.00	57.43	63.69	67.16	69.41	74.71	79.68	80.30	84.37	92.93	99.22	102.06	104.34	110.57	125.10
240	0.00	58.48	64.86	68.40	70.69	76.09	81.16	81.80	85.95	94.68	101.10	103.99	106.32	112.69	127.53
260	0.00	59.42	65.90	69.50	71.83	77.33	82.48	83.13	87.35	96.23	102.76	105.71	108.08	114.56	129.68
310.5	0.00	61.38	68.09	71.80	74.21	79.90	85.23	85.90	90.27	99.48	106.24	109.30	116.45	123.47	134.18

[0056] When the value of s is 1, the ratio of the linear speed of the licker-in roller to the saw blade roller corresponding to the above chord length S is shown in Table 3.

TABLE 3

The ratio of the linear speed licker-in roller to the saw blade roller The radius of the licker-in roller	The thickness of the floating layer (mm)													
(mm)	0.60	5.00	6.00	7.00	8.00	9.00	9.13	10.00	11.96	13.51	14.24	14.84	16.54	20.84
125	0.00	−8.08	−70.98	14.53	7.45	5.33	5.16	4.30	3.31	2.89	2.75	2.65	2.43	2.09
160	0.00	−19.67	19.18	7.70	5.22	4.14	4.04	3.53	2.86	2.56	2.46	2.38	2.21	1.94
180	0.00	−48.59	12.57	6.44	4.65	3.79	3.71	3.28	2.71	2.45	2.35	2.29	2.13	1.89
200	0.00	237.62	9.81	5.68	4.27	3.55	3.48	3.11	2.60	2.36	2.28	2.22	2.07	1.84
203	0.00	132.49	9.52	5.60	4.22	3.52	3.45	3.08	2.59	2.35	2.27	2.21	2.07	1.84

TABLE 3-continued

The ratio of the linear speed licker-in roller to the saw blade roller / The radius of the licker-in roller (mm)	The thickness of the floating layer (mm)													
	0.60	5.00	6.00	7.00	8.00	9.00	9.13	10.00	11.96	13.51	14.24	14.84	16.54	20.84
220	0.00	40.14	8.28	5.18	3.99	3.37	3.30	2.97	2.52	2.30	2.22	2.16	2.03	1.81
240	0.00	23.54	7.32	4.81	3.79	3.23	3.17	2.87	2.45	2.24	2.17	2.11	1.99	1.78
260	0.00	17.37	6.65	4.54	3.63	3.11	3.06	2.79	2.39	2.20	2.13	2.08	1.96	1.76
310.5	0.00	5.92	3.99	3.20	2.76	2.49	2.46	2.30	2.05	2.11	1.87	1.84	1.75	1.72

[0057] When the value of ε is 0.8, the ratio of the linear speed of the licker-in roller to the saw blade roller corresponding to the above chord length S is shown in Table 4.

TABLE 4

The ratio of the linear speed ratio of the licker-in roller to the saw blade roller / The radius of the licker-in roller (mm)	The thickness of the floating layer (mm)													
	0.60	5.00	6.00	6.59	7.00	8.00	9.00	9.13	10.00	11.96	13.51	14.24	14.84	20.84
125		9.91	5.30	4.34	3.92	3.25	2.86	2.82	2.59	2.26	2.10	2.04	1.99	1.72
160	0.00	6.28	4.14	3.56	3.29	2.83	2.54	2.51	2.34	2.09	1.95	1.90	1.87	1.63
180	0.00	5.45	3.79	3.32	3.08	2.69	2.43	2.41	2.25	2.02	1.90	1.85	1.82	1.60
200	0.00	4.92	3.55	3.14	2.93	2.58	2.35	2.33	2.19	1.97	1.86	1.81	1.78	1.58
203	0.00	4.85	3.52	3.12	2.92	2.57	2.34	2.31	2.18	1.96	1.85	1.81	1.78	1.57
220	0.00	4.55	3.37	3.00	2.82	2.50	2.28	2.26	2.13	1.93	1.82	1.78	1.75	1.56
240	0.00	4.27	3.23	2.90	2.73	2.43	2.23	2.21	2.09	1.90	1.80	1.76	1.73	1.54
260	0.00	4.06	3.12	2.81	2.66	2.38	2.19	2.17	2.05	1.87	1.77	1.74	1.71	1.53
310.5	0.00	3.70	2.92	2.66	2.52	2.28	2.11	2.09	1.99	1.82	1.73	1.69	1.67	1.50

[0058] Preferably, the diameter d_c of the saw blade roller is 320 mm, the rotating speed of the saw blade roller is greater than 300 rpm, the arc M of the saw blade roller rotating with the cotton fiber is 92°-180°, and the radius of the licker-in roller R_c is greater than that of the saw blade roller, and when the thickness B of the cotton-fiber floating layer is greater than 13.54 mm, the licker-in roller and the saw blade roller are driven to rotate by the geared motor at a linear speed ratio of S:S−2εL$_m$, in which L$_m$ is a length of the cotton fiber; ε is an inclination coefficient of the cotton fiber; ε is 0.8-1; and S is a length of a common chord length of after the intersection of the cotton fiber floating layer and the licker-in roller corresponding to the licker-in roller, which is equal to

$$S = 2\sqrt{R_c^2 - \left(\frac{R_c^2 - (r_j + B)^2 + (r_j + R_c + x)}{2(r_j + R_c + x)}\right)^2},$$

in which x is 0.6-1 mm.

[0059] The cotton fiber transferred to move with the licker-in roller, under the action of the rotating centrifugal force of the licker-in roller, leaves the licker-in roller, and is supported by the movable impurity-removing plate and the cotton-fiber support plate arranged at the lower part of the licker-in roller, and is blocked by the windscreen plate. The cotton fiber is ejected from the cotton fiber outlet through the machine body under the action of centrifugal force and centrifugal inertia force.

[0060] The technical scheme of the present disclosure realizes 100% transfer of cotton fibers on the saw blade roller to the licker-in roller for the first time. So that the non-contact ginning machine has the conditions for industrial application.

[0061] The principle of the device provided herein for reducing working noise and reducing working dust is described as follows.

[0062] The height of the licker-in wire layer is much smaller than the height of the brush, so that the air volume passing through the second cover plate of the licker-in roller when the licker-in roller rotates is much smaller than that of the brush roller, which greatly reduces the dust volume; and the airflow passing through the second cover plate of the licker-in roller is reduced, the airflow speed is reduced, so that the airflow speed is much lower than the surface linear speed of the licker-in roller, preventing the airflow from cutting the card wire to produce noise.

BRIEF DESCRIPTION OF THE DRAWINGS

[0063] FIG. **1** schematically depicts a structure of an existing device for transferring a cotton fiber in a contact manner according to a comparative example;

[0064] FIG. **2** schematically depicts a structure of a device for removing an impurity in a cotton fiber based on a device for transferring a cotton fiber according to an embodiment of the present disclosure;

[0065] FIG. **3** schematically depicts a transfer process of a cotton fiber using the device for transferring the cotton fiber according to an embodiment of the present disclosure;

[0066] FIG. **4** schematically depicts a force exerted on the transferred cotton fiber in the device for transferring the cotton fiber according to an embodiment of the present disclosure;

[0067] FIG. **5** schematically depicts a transfer process of the cotton fiber using in the device for transferring the cotton fiber in the comparative example;

[0068] FIG. **6** schematically depicts a structure of the device for removing the impurity in the cotton fiber based on the device for transferring the cotton fiber according to an embodiment of the present disclosure;

[0069] FIG. **7** schematically depicts a force exerted on a seed-cotton roll by teeth of a saw blade roller at a working point of a rib in a reference report; and

[0070] FIG. **8** is a schematic diagram of an angle between the cotton fiber and a circumferential tangent line of the saw blade roller when the saw blade roller pulls the cotton fiber from a rib.

[0071] In the drawings, **100**, brush roller; **101**. brush; **110**. brush bundle; **120**. brush root; **130**. cover plate; **102**. shell;

[0072] **200**. licker-in roller; **401**. impurity-removing plate; **402**. second cover plate; **4021**. starting end; **403**. windscreen plate; **404**. cotton-fiber support plate; **405**. guide plate; **406**. exit channel; **407**. shell; **408**. licker-in wire layer; **409**. cover plate; **410**. air compensation port; **411**. cylindrical cavity; **412**. first window; **413**. second window; **414**. cotton-brushing area; **415**. box plate; **700**. saw blade roller; **701**. saw blade; **7011**. teeth; **70111**. entrance side; and **702**. rib.

DETAILED DESCRIPTION OF EXAMPLES

[0073] The technical solutions of the prior art and the present disclosure will be further described below with reference to the accompanying drawing.

[0074] Referring to FIGS. **6-8**, a cotton fiber transfer device is provided. Seed cotton moves with teeth **7011** towards a rib **702**, and immediately changes the direction and speed of movement when hitting the rib **702**. The seed cotton then moves upwards along a surface of the rib **702**. A running force Fp of a saw blade **701** can be decomposed into two mutually perpendicular forces Fr and Ft. A direction of the Fp is consistent with a traveling direction of the teeth **7011** at a working point, and is perpendicular to a radial direction of the saw blade **701**. The Fr is perpendicular to the rib, and is a force for the teeth **7011** at a working point of the rib **702** to pull out a cotton fiber from the cotton seed. A direction of the Ft is parallel to the rib **702**, and is a force for the teeth **7011** at the working point of the rib **702** to drive a roll of the seed cotton to run. An angle between a tangent of the rib **702** at the working point and a tangent (Fp direction) of the saw blade **701** is a pressure angle. The pressure angle increases when the teeth **7011** pass through the working point of the rib **702**, which reducing an effect on the roll of the seed cotton to run upwards along a tangent function of the rib **702**. Since the roll of the seed cotton runs upwards along the tangent direction of the rib, an angle σ between the cotton fiber and a normal plane of the teeth **7011** passing through a top of the teeth **7011** is less than 90°, and a maximum value of an angle δ between the cotton fiber and an entrance side **70111** of a tooth is 90°. The entrance side **70111** of the tooth is a side of the tooth close to a licker-in roller **200**. Specifically, as shown in FIG. **7**, a right side of each tooth of the teeth **7011** is the entrance side **70111** of the corresponding tooth. Specifically, the seed cotton includes the cotton seed and cotton fiber.

[0075] In an embodiment, a saw blade roller **700** hooks out the cotton fiber from between ribs **702** to form an initial floating layer with a thickness of $L_m \times \sin t$, in which L_m is a length of the cotton fiber; t is an angle between the cotton fiber pulled out and a tangent of the saw blade roller **700** at an intersection of the cotton fiber and the saw blade roller **700**; $t=\theta=40\pm4°$; and θ is an angle between the entrance side **70111** of the tooth of the saw blade roller **700** and a normal plane of the teeth **7011** passing through the top of the teeth **7011**. Specifically, when the saw blade roller **700** hooks out the cotton fiber of the seed cotton between the ribs **702** and the initial floating layer is just formed, the cotton fiber (the initial floating layer) is subjected to a centrifugal force when rotating with the saw blade roller **700**, such that the thickness of the cotton fiber (the initial floating layer) gradually increases to form a cotton-fiber floating layer.

[0076] In an embodiment, the cotton fiber transfer device may be, but is not limited to, applied to a saw ginning machine, a saw delinting machine and a saw lint cleaner.

Comparative Example 1

[0077] As shown in FIG. **1**, a saw blade roller **700** and a brush roller **100** in the prior art may be configured to constitute a saw ginning machine, a saw delinting machine

and a saw lint cleaner. A diameter of a saw blade **701** of the saw blade roller **700** of the saw ginning machine is 320 mm, and the saw blade roller **700** has a working length of 1024.25 mm and a rotation speed of 500 rpm. The brush roller **100** includes a shell **102** and a brush **101**. A diameter of the shell **102** is 310 mm. An outer circumference of the licker-in roller shell **102** is provided with twenty-six brushes **101** spaced apart. A height of the brush **101** is 50 mm, that is, a height of a brush bundle **110** is 25 mm and a height of a brush root **120** is 25 mm. A radius of the shell **102** is 155 mm, that is, when the brush roller **100** rotates, a rotating diameter is 410 mm. A thickness of a single brush bundle **110** is 10 mm, and a thickness of a single brush root **120** is 25 mm. The brush roller **100** has a length of 1400 mm and a rotation speed of 1010 rpm. A lower half of the brush roller **100** is wrapped by a cotton-fiber support plate **404**.

[0078] As shown in FIG. **5**, an end A of a cotton fiber is hooked on the saw blade **701**. The cotton fiber moves centripetally along a tangential direction of the saw blade **701**. The other end C of the cotton fiber is pulled by a force along a direction of the cotton fiber to follow the A end of the cotton fiber to rotate, such that the cotton fiber is pulled to be straight. A tensile force can be decomposed into a centripetal force F_1 pointing to a circle center O and a component force F_2 parallel to the arc tangent. The C end of the cotton fiber is also subjected to a centrifugal force F_3 and a resistance force in a direction opposite to the centrifugal force. As shown in FIG. **4**, an angle between a line of the end C and the end A of the cotton fiber and a tangential direction of the saw blade **701** is β. When the cotton fiber rotates with the saw blade **701**, a cotton-fiber floating layer is formed. The cotton-fiber floating layer is partially in contact with a surface of the brush roller **100**, and the contact area on the brush roller **100** is a cotton-brushing area **414**. An effective range of the brush bundle **110** is an arc of rotation when the brush bundle **110** is in contact with the saw blade roller **700**. The brush **101** of the brush roller **100** extends 1 mm into the saw blade roller **700**, and a chord length of the brushing area **414** corresponding to the saw blade roller **700** is 61.677 mm. A central angle Φ_j of the saw blade roller **700** corresponding to the effective range of the brush bundle **110** is 13.566°, and a central angle Φ_m of the brush roller **100** corresponding to the effective range of the brush bundle **110** is 11.464°. A center angle of the brush roller **100** Φ_o corresponding to the adjacent brush bundles **110** is 10.981°, calculating by the following equation: $\Phi_o=360°/26-2\ \arcsin(5/200)=10.981°$. The cotton-brushing area **414** is a sum of the Φ_o and the Φ_m. A displacement time of the saw blade **701** following the brush bundle **110** along the effective range of the brush bundle **110** is equal to a time that the brush bundle **110** moves in the cotton-brushing area **414**, which is represented by the following equation: $(\Phi_j \cdot D_j)/v_i=(\Phi_o+\Phi_m)\cdot D_m/v_m$, in which v_j is a linear speed of the saw blade **710**. A linear speed ratio I between the brush roller **100** to the saw blade roller **700** is calculated according to an experience formula: $i\geq(\Phi_o+\Phi_m)\cdot D_m/(\Phi_j \cdot D_j)=2.068$, so as to brush the cotton fiber cleanly. Therefore, a central angle of the brush roller **100** with the diameter of 410 mm corresponding to the cotton brushing area **414** is 22.445°.

[0079] An air quantity generated by the brush roller **100** per minute during working is calculated as follows:

$$\text{Air quantity } Q_3=V*S/T$$

[0080] in which, V is a volume of the brush roller **100** suffering from the air; S is a rotation speed; and T is a working time.

$$V=\{\text{a contour area of the brush roller 100-an area of the shell 102-an area of twenty-six brush bundles 110 and the brush roots 120}\}*\text{the length of brush roller 100}=$$

$$\{3.14*(0.155+0.025+0.025)m*(0.155+0.025+0.025)m-3.14*0.155m*0.155m-[(0.025*0.025)+(0.01*0.025)]m^2*26\}*1.4m=0.047278m^3.$$

$$\text{Air quantity } Q_3=0.047278m^3*1010/\min=47.75m^3/\min=0.796m^3/s.$$

[0081] Therefore, the air quantity generated by the brush roller **100** per hour is about 2865.05 m^3. A gap between a windscreen plate **403** and a top of the brush of the brush roller **100** is generally required to be set at 3 mm. Then, an area of an upper air inlet of the brush roller **100** is only 0.0042 m^2, which is calculated by the equation: 1.4 m*0.003 m=0.0042 m^2; and the air quantity generated by the brush roller **100** is 0.796 m^3/s. Theoretically, a wind speed v_3 at the intersection should reach 0.796÷0.0042=189.4872 m/s, and a linear speed of the brush bundle **110** is 3.14*(0.155+0.025+0.025)*2*1010÷60=21.671 m/s. The linear speed of the brush bundle **110** is less than the airflow speed 189.4872 m/s required by an air inlet of a gap with a width of 1-3 mm between the brush bundle **110** and the windscreen plate **403**. After being blocked by the rear windshield **403** and the brush bundle **110**, the air flow vibrate the brush bundle **110** and the brush root **120** to generate noise, and the airflow forms a negative pressure or even a vacuum at a cover plate **130** of the brush. The huge air pressure difference and wind speed will inevitably cause violent friction with the windscreen plate **403** at the air inlet of the gap with the width of 1-3 mm, resulting in huge howling noise.

[0082] According to the Bernoulli equation, an equation can be obtained as follows:

$$P_3+\rho gh+\tfrac{1}{2}\rho v_3^2=P_0+\rho gh+\tfrac{1}{2}\rho v_0^2.$$

[0083] In an embodiment, an impurity-removing plate **401** is provided on a side of the cotton-fiber support plate **404** close to the saw blade roller **700**.

[0084] As shown in FIG. **1**, P_3 is a pressure at a left end of the impurity-removing plate **401**; P_0 is a pressure at the saw blade roller **700**; and P_0 is the atmospheric pressure. The airflow generated by a rotating saw blade roller **700** is negligible. v_0 is 0 m/s. An air density ρ is 1.293 g/L. A first gap between the brush bundle **110** and the left end of the impurity-removing plate **401** is set to 20 mm, and the first gap between the brush bundle **110** and the left end of the impurity-removing plate **401** forms an air inlet. An area of the air inlet is 1.4 m*0.02 m=0.024 m^2. The air quantity generated by the brush bundle **110** is 0.796 m^3/s. Theoretically, the wind speed v_3 at the air inlet between the left end

of the impurity-removing plate **401** and the brush **110** bundle should reach 0.796÷0.024=33.16 m/s, which is greater than a linear speed of the brush bundle **110** of 27.786 m/s. A second gap between a right end of the impurity-removing plate **401** and the brush bundle **110** is 60 mm, and a wind speed at the second gap is one third of the wind speed at the first gap.

[0085] $\Delta P'=P_3-P_0=-\frac{1}{2}\rho v_3^2=-710.893$ Pa. That is, and air pressure between the left end of the impurity-removing plate **401** and the brush bundle **110** is negative pressure, which is very different from the atmospheric pressure on a side of the saw blade roller **700**. An air pressure difference generates a suction force to the cotton fiber towards a side of the channel between the impurity-removing plate **401** and the brush roller **100**, such that the cotton fiber is sucked into the channel between the impurity-removing plate **401** and the brush roller **100**. A wind speed in the channel between the impurity-removing plate **401** and the brush roller **100** is greater than the linear speed of the brush bundle **110**. Impurities such as infertile seeds, leaf crumbs, cottonseed hulls, cottonseed covers on a surface of the brush roller **100** are sucked into the channel between the impurity-removing plate **401** and the brush roller **100** before being layered. The impurity-removing plate **401** can block the impurities with a larger particle size that the impurities larger than a width of the channel between the impurity-removing plate **401** and the brush roller **100** are blocked. Since the wind speed is greater than the linear speed of the brush bundle **110**, the cotton fiber moves forwards faster than the brush bundle **110** and is blocked between the brushes **101** of two adjacent brush bundles **110**. As a result, the holding power of the brush bundle **110** on the cotton fiber is further reduced, and the cotton fiber is also lost, reducing the clothing content, that is, a weight percent the cotton fiber in the seed cotton.

Embodiment 1

[0086] As shown in FIG. **2**, a cotton fiber transfer device includes a saw blade roller **700**, a licker-in roller **200**, a cotton-fiber support plate **404**, a first cover plate **402**, a guide plate **405**, a windscreen plate **403** and two box plates **415** arranged oppositely. The first cover plate **402** and the cotton-fiber support plate **404** are arranged between the two box plates **415** from top to bottom. A cylindrical cavity **411** is enclosed by the cotton-fiber support plate **404** and the first cover plate **402**. An arc surface of the cylindrical cavity **411** is provided with a first window **412** and a second window **413** arranged oppositely. The first window **412** is communicated with an exit channel **406** enclosed by the guide plate **405** and the windscreen plate **403** between the two box plates **415**. The licker-in roller **200** is arranged along an axis of the cylindrical cavity **411**. The saw blade roller **700** is arranged in the second window **413**, and an axis of the saw blade roller **700** is parallel to an axis of the licker-in roller **200**. The second window **413** faces way from the exit channel **406**.

[0087] As shown in FIG. **2**, in an embodiment, a plurality of second cover plates **409** are arranged spaced apart on the saw blade roller **700**. Specifically, a plurality of second cover plates **409** are arranged spaced apart on an upper half of the circumferential surface of the saw blade roller **700**.

[0088] As shown in FIG. **2**, a cotton-fiber impurity-removing device includes the cotton fiber transfer device and an impurity-removing plate **401**. The impurity-removing plate **401** is arranged on a side of the cotton-fiber support plate **404** close to the saw blade roller **700**, and the impurity-removing plate **401** and the two box plates **415** are detachable. The licker-in roller **200** can rotate with respect to the first cover plate **402** to form a low pressure zone on a side of the second cover plate **409**, reducing an air resistance of the cotton fiber when the cotton fiber rotates centrifugally with the saw blade roller **700** in the low pressure zone.

[0089] As shown in FIG. **2** and FIG. **6**, in an embodiment, the licker-in roller **200** and the saw blade roller **700** are arranged between the two side box plates **415** of the cotton-fiber impurity-removing device. A diameter of the licker-in roller **200** is larger than a diameter of the saw blade roller **700**. An effective length of the licker-in roller **200** is greater than an effective length of the saw blade roller **700**. The licker-in roller **200** and the saw blade roller **700** are arranged and driven according to the following manner. A cotton-brushing area **414** is formed between the licker-in roller **200** and the saw blade roller **700**. The licker-in roller **200** and the saw blade roller **700** are axially parallel. A distance x between a surface of the licker-in roller **200** and a surface of the saw blade roller **700** is 0.6 mm. The licker-in roller **200** and the saw blade roller **700** are driven by a driving device to rotate. A rotating direction of the licker-in roller **200** is opposite to a rotating direction of the saw blade roller **700**, and a linear speed of the licker-in roller **200** is greater than a linear speed of the saw blade roller **700**, such that the cotton fiber rotates with the saw blade roller to form a cotton-fiber floating layer. The cotton-fiber floating layer is transferred through the rotation of the licker-in roller **200**, and is finally thrown out along a tangential direction of the licker-in roller **200**. The cotton-fiber support plate **404** and the first cover plate **402** are arranged in parallel between the two box plates **415** along an upper half and a lower half of a circumferential surface of a shell **407** of the licker-in roller **200**, respectively. A plurality of second cover plates **409** are arranged spaced apart on the upper half of the circumferential surface of the saw blade roller **700**. An end of the cotton-fiber support plate **404** and the first cover plate **402** away from the saw blade roller **700** are connected to the guide plate **405** and the windscreen plate **403**, respectively. The guide plate **405**, the windscreen plate **403** and the two box plates **415** enclose the exit channel **406**. The exit channel **406** is parallel to a throwing direction. A vertical distance between an end of the first cover plate **402** and the cotton-brushing area **414** is 40-100 mm. A vertical distance from the second cover plate **402** to a surface of the saw blade roller **700** is greater than 21 mm. A left end of each second cover plate **409** is 3-10 mm away from the surface of the saw blade roller **700**, and a right end of each third cover plate **409** is connected to the first cover plate **402**. The other end of the cotton-fiber support plate **404** is detachably connected to the impurity-removing plate **401**. The impurity-removing plate **401** is parallel to an outer surface of a lower half of the shell **407** of the licker-in roller **200**. The connection line between the end of the impurity-removing plate **401** near the saw blade roller **700** and the center of the licker-in roller **200** is connected. An angle between a connection line of an end of the impurity-removing plate **401** close to the saw blade roller **700** and a circle center of the licker-in roller **200** and a center line of the saw blade roller **700** and the licker-in roller **200** is 40-60°, and an arc of the each third cover plate **409** covering a surface of the saw blade roller **700** is 62°.

[0090] As shown in FIG. **2**, in an embodiment, a surface of the licker-in roller **200** is mounted by a licker-in wire layer **408** spaced apart along a circumference direction.

[0091] In an embodiment, the cotton fiber transfer device further includes the shell **407** of the licker-in roller **200**. The shell **407** of the licker-in roller **200** covers the licker-in roller **200**, and the licker-in wire layer **408** is evenly wound around on a surface the shell **407** along a circumference direction. The licker-in wire layer **408** includes a 109-type card wire and card clothing.

[0092] As shown in FIG. **7**, in an embodiment, an outer circumference of a saw blade **701** of the saw blade roller **700** is provided with teeth **7011**.

[0093] As shown in FIG. **2**, the specific parameters are as follows. A diameter of the saw blade **701** of the saw blade roller **700** of a saw ginning machine is 320 mm. The saw blade roller **700** has a working length of 1024.25 mm and a rotation speed of 500 rpm. A spacer ring is arranged between adjacent saw blades **701** of the saw blade roller **700**, and the thickness of the spacer ring is 18 mm. A thickness of the saw blade **701** is 0.95 mm. An interval between the adjacent saw blades **701** is 18 mm. Fifty-five saw blades **701** are provided in total. An effective length of the saw blade roller **700** is 55*0.95=52.25 mm, and a gap length is 1024.25−52.25=972 mm. A diameter of the spacer ring is 160 mm. The shortest distance from a surface of the spacer ring to a tooth tip of the saw blade **701** is 80 mm. The shell **407** of the licker-in roller **200** has a diameter of 400 mm and a working length of is 1400 mm. The licker-in wire layer **408** composed the 109-type card wire and the card clothing is evenly wound on the surface of the shell **407** along the circumference. A wounding spacing of the licker-in wire layer **408** is 2 mm. All card wires are arranged on the surface of the shell **407**, and faces to the same direction or are perpendicular to a surface of the licker-in wire layer **408**. A height of the card wire is 3 mm, and a radius R_1 of the licker-in wire layer **408** is 203 mm. A volume of the card wire occupies 40% of a volume of the licker-in wire layer **408**, and a rotation speed of the licker-in roller **200** is 1440 rpm. A gap between the surface of the saw blade roller **700** and a surface of the licker-in roller **200** is 0.6 mm. A gap between a surface of the first cover plate **402** and the surface of the licker-in wire layer **408** is 3 mm. A distance between the impurity-removing plate **401** and the surface of the licker-in roller **200** is 30 mm. A linear speed of the card wire on the surface of the licker-in roller **200** is 3.14*(0.2+0.003)*2*1440÷60=30.59 m/s. A linear speed of the teeth **7011** on the surface of the saw blade roller **700** is 3.14*(0.16)*2*500±60=8.37 m/s. A ratio of a linear speed of the surface of the licker-in roller **200** to the linear speed of the surface of the saw blade roller **700** is 3.65:1. A preliminary observation and test shows that an impurity-removing amount is more than 50%; a transfer rate of the cotton fiber reaches 100%; the length of the cotton fibers is basically the same; and the processing quality is better than the standard GB/T21308-2007 of the current lint cleaner.

[0094] Referring to FIGS. **3-4**, the reasons for the effects of the above embodiment are analyzed as follows.

[0095] 1. Analysis of a Producing Area of the Cotton-Fiber Floating Layer in the Cotton-Brushing Area According to an Air Flow Field Generated During an Operation of the Licker-in Roller **200**,

$$\text{Air quantity } Q_2 = V*S/T*1.4\ m;$$

[0096] in which, V is a volume of the licker-in roller **200** suffering from the air; S is a rotation speed; and T is a working time.

[0097] The volume of the licker-in roller **200** suffering from the air V_1=[3.14*(0.2+0.003) m*(0.2+0.003) m*1.4 m−3.14*0.2 m*0.2 m*1.4 m]*60%=0.003189 m^3.

$$\text{Air quantity } Q_2 = 0.003189\ m^3*1440/\text{min} = 4.592\ m^3/\text{min} = 0.0797\ m^3/s.$$

[0098] Therefore, the air quantity generated by the licker-in roller **200** per hour is about 286.9973 m^3. A gap between a surface profile of the card wire and the windscreen plate **403** is set to 3 mm, and an area of an air inlet formed by the gap between the surface profile of the card wire and the windscreen plate **403** is 1.4 m*0.003 m=0.0042 m^2. The air quantity generated by the licker-in roller **200** is 0.0797 m^3/s. Theoretically, a wind speed v_1 between the first cover plate **402** and the licker-in roller **200**, at the air inlet, and at an air outlet reaches 0.0797÷0.0042=18.981 m/s. An air flow that moves from the air inlet to the air outlet for brushing the cotton fiber is formed. The first cover plate **402** is connected to the third cover plate **409** and the exit channel **406**, and the exit channel **406** is under a negative pressure; therefore, when the licker-in roller **200** rotates, the air cannot be exhausted from the exit channel **406** to the saw blade roller **700**, and a negative pressure zone will be formed at the saw blade roller **700**.

[0099] According to the Bernoulli equation, the following equation can be obtained:

$$P_1+\rho gh+\tfrac{1}{2}\rho v_1^2=P_0+\rho gh+\tfrac{1}{2}\rho v_0^2.$$

[0100] Referring to FIG. **2**, P_1 is a pressure at a left end of the first cover plate **402**; P_0 is a pressure outside the third cover plate **409**; P_0 is the atmospheric pressure; the air density p=1.293 g/L; v_0 is smaller than v_1; and $\Delta P=P_0-P_1=-\tfrac{1}{2}\rho(v_1^2-v_0^2)=232.927-\tfrac{1}{2}\rho v_0^2>0$. Therefore, a negative pressure is formed between the third cover plate **409** and the saw blade roller **700**. The cotton fiber will not suffer from a wind resistance after entering an area covered by the third cover plate **409**, and will not be blown into a space between the saw blades **701** but be thrown out. An arc M of the third cover plate **409** covering the surface of the saw blade roller **700** is 62°, which can be used to calculate the number N of rotations of the cotton fiber entering a low-resistance area of the third cover plate **409** and moving to the surface of the licker-in roller **200**. N is greater than 62°, and is greater than $(M)/(2\Pi r_j)$. N is the number of rotations that cotton fiber rotates with the centrifugal movement of the saw blade roller **700** until it is thrown on the surface of the licker-in roller **200**. The radius of the saw blade roller **700** is r_j. A relationship between the number N of rotations and the angle M is as shown in the table 5.

TABLE 5

Angle	20°	30°	40°	50°	60°	70°	80°	90°
Number of rotations of the cotton fiber	0.056	0.083	0.111	0.139	0.167	0.194	0.222	0.25
Thickness B of the floating layer on the licker-in roller with a diameter of 400 mm and a speed of 1440 rpm	10.76	16.14	21.52	26.90	32.28	37.66	43.04	48.42

Angle	100°	120°	130°	140°	150°
Number of rotations of the cotton fiber	0.278	0.333	0.361	0.389	0.417
Thickness B of the floating layer on the licker-in roller with a diameter of 400 mm and a speed of 1440 rpm	53.80	59.18	64.56	69.94	75.33

[0101] 2. Analysis of an Impurity-Removing Effect According to an Installation Position of the Impurity-Removing Plate **401**

[0102] Referring to FIG. **2**, an angle between a connection line of an end of the impurity-removing plate **401** close to the saw blade roller **700** and a circle center of the licker-in roller **200** and a connection line of a center of the saw blade roller and a center of the licker-in roller **200** is 40-60°. As shown in the table 5, thicknesses of the cotton-fiber floating layers transferred to the licker-in roller **200** and rotating for 0.111, 0.139 or 0.167 turn to meet the impurity-removing plate **401** are calculated as follows:

$$B = \frac{d_c^2 \prod (M) 2 \prod r_j w \rho_s}{2 \prod r_j * 9\mu} = \frac{d_c^2 \prod (M) w \rho_s}{9\mu};$$

[0103] in which w is a rotating speed of the saw blade roller **700**; d_c is a diameter of the cotton fiber; ρ_s is a proportion of the cotton fiber in the cotton-fiber floating layer r; and μ is a fluid viscosity of air; and Π is Pi.

[0104] The thicknesses of the cotton-fiber floating layers transferred to the licker-in roller **200** and rotating for 0.111, 0.139 or 0.167 turn are 21 mm, 27 mm and 32 mm, respective. Since the density and diameter of the impurities are much larger than the cotton fiber, thicknesses of impurity floating layers formed by the impurities transferred to the licker-in roller **200** and rotating for 0.111, 0.139, or 0.167 are much greater than those of the cotton-fiber floating layer. When a width of the gap between the impurity-removing plate **401** and the surface of the licker-in roller **200** is 21, 28 or 33 mm, the cotton fiber can be blocked between the impurity-removing plate **401** and the licker-in roller **200**, so as to separate the impurity from the cotton fiber. The thickness of the cotton-fiber floating layers is smaller than the width of the gap between the impurity-removing plate **401** and the licker-in roller **200**, and the impurity-removing plate **401** does not damage the cotton fiber. Since the density and particle size of the impurity in the cotton fiber are much larger than those of the cotton fiber, when rotating with the licker-in roller **200**, the impurity generates a centrifugal thickness greater than the thickness of the cotton-fiber floating layer. The centrifugal thickness of the impurity is larger than the width of the gap between the impurity-removing plate **401** and the licker-in roller **200**, such that the impurity can be discharged by the impurity-removing plate **401**.

[0105] 3. Analysis of a Mechanism for the Cotton Fiber to be Transferred from the Saw Blade Roller **700** to the Licker-in Roller **200**

[0106] As shown in FIG. **4**, an end A of a cotton fiber is hooked on the saw blade **701**. The cotton fiber moves centripetally along a tangential direction of the saw blade **701**. The other end C of the cotton fiber is pulled by a force along a direction of the cotton fiber to follow the A end of the cotton fiber to rotate, such that the cotton fiber is pulled to be straight. A tensile force can be decomposed into a centripetal force F_1 pointing to a circle center O and a component force F_2 parallel to the arc tangent. The C end of the cotton fiber is also subjected to a centrifugal force F_3 and a resistance force in a direction opposite to the centrifugal force. As shown in FIG. **4**, an angle between a line of the end C and the end A of the cotton fiber and a tangential direction

of the saw blade **701** is β. When the cotton fiber rotates with the saw blade **701**, a cotton-fiber floating layer is formed. The cotton-fiber floating layer is partially in contact with a surface of the brush roller **100**, and the contact area on the licker-in roller **200** is a cotton-brushing area **414**. A length of a chord of the licker-in roller **200** corresponding to the cotton brushing area **414** is S.

[0107] As shown in FIG. **3**, since the length S of the cotton-brushing area **414** is short, a process of transferring cotton fibers from the saw blade **701** to the licker-in wire layer **408** can be equivalent to transferring the cotton fiber from a linearly-moving object a to a linearly-moving object b. When s is 1, a length of the cotton fiber L_m is 28 mm. In an initial state, one end of the cotton fiber is hung at point A of the object a, and the other end is hung at point B of the object b. A maximum distance from the point A to the point B is the length of the cotton fiber. The condition for the complete transfer of the cotton fiber is that the distance from the point B to the point A is greater than the length of the cotton fiber, that is, when leaving from the object a, the cotton fiber is completely straightened. In this way, the end of the cotton fiber far away from the point B of the object can be separated from the point A of the object a. If the separation of the cotton fiber and the point A of the object a is not completed in the cotton brushing area **414**, the speed directions of the object a and the object b will change, such that when the object a produces a velocity component in a direction opposite to a traveling direction of the object b, the cotton fiber will be torn off by the object a and the object b, resulting in an incomplete transfer of the cotton fiber, returning flow of the cotton fiber or fiber block. The length S of the cotton brushing area **414** should be greater than $2L_m+2h_s$, in which h_s is a traveling distance a hanging point of cotton fiber on the saw blade **701** when the hanging point of cotton fiber on the licker-in wire layer **408** catches up with the hanging point of the cotton fiber on the saw blade **701**. Therefore, $h_s/v_a \geq (h_s+L_m)/v_b$, $h_s \geq L_m * v_a/(v_b-v_a)$; in which v_b and v_a are tlinear speeds of the licker-in wire layer **408** and the saw blade **701**, respectively.

[0108] 4. Checking Calculation the Characteristics for Transferring the Cotton Fiber

[0109] The size of the licker-in roller **200**, the size of the saw blade roller **700**, and the rotation speed of the saw blade roller **700** in this example are similar to those in Comparative Example 1. An arc of the saw blade roller **700** covered by the third cover plate **409** in this example is 62°. The thickness B of the cotton-fiber floating layer is calculated according to Table 1.

$$B = \frac{d_c^2 \prod (M) 2 \prod r_j w \rho_s}{2 \prod r_j * 9\mu} = \frac{d_c^2 \prod (M) w \rho_s}{9\mu}$$

[0110] A diameter of one cotton fiber: d_c=15 μm; a length of one cotton fiber: 28 mm; a volume of one cotton fiber: 3.14*0.015 mm*0.015 mm*28=0.019782 mm^3; a specific density ρ_s of the cotton fiber: 1.5 g/cm^3; at 30° C., μ=0.0186 mPa*s. w is a rotation speed of the saw blade roller **700**, and u_t is a tangential velocity of a particle and gas in a cyclone separator, and is equivalent to a linear speed of the cotton fiber when the cotton fiber rotates with the saw blade roller **700**. u_t is equal to $2\Pi r_j w$.

[0111] Table 5 shows the number of rotations that cotton fiber rotates with the centrifugal movement of the saw blade roller **700** until it is thrown on the surface of the licker-in roller **200**, and the number of rotations is 62° in this example. A distance between the surface of the licker-in roller **200** and the surface of the saw blade roller **700** is 0.6 mm. The thickness of the cotton-fiber floating layer on the saw blade roller **700** is 9.13 mm. It can be seen from Table 1 that the corresponding thickness 9.13 mm of the cotton-fiber floating layer is smaller than 21 mm, and the cotton-fiber floating layer will not touch the first cover plate **402**. The length S of the common chord of the intersecting area (cotton brushing area **414**) of the cotton-fiber floating layer and the licker-in roller **200** is no less than 78.88 mm in Table 2.

$$S = 2\sqrt{R_c^2 - \left(\frac{R_c^2 - (r_j + B)^2 + (r_j + R_c + x)}{2(r_j + R_c + x)}\right)^2};$$

[0112] in which B is a thickness of the initial floating layer; R_c is a radius of the licker-in roller **200**; r_j is a radius of the saw blade roller **700**, x is the distance between the surface of the licker-in roller **200** and the surface of the saw blade roller **700**. When the length S is 78.88 mm, according to $S=78.88\ mm=2(h_s+\varepsilon L_m)$, it can be calculated: h_s=11.44 mm. In addition, $v_b:v_a=3.65>3.45:1$, the high line speed ratio makes the cotton fiber always be in a straight state during transfer, reducing the twisting and knotting of cotton fiber. When the arc of the saw blade roller **700** covered by the third cover plate **409** is larger than 62°, the licker-in roller **200** provided herein can completely transfer of the cotton fiber from the saw blade roller **700** at the same rotation speed.

[0113] The linear speed of the card wire on the surface of the licker-in roller **200**: 3.14*(0.2+0.003)*2*1500÷60=31.87 m/s; and the linear speed of the surface of the licker-in roller **200**: 3.14*(0.2)*2*1440÷60=31.4 m/s. That is, the linear speed of the licker-in roller **200** and the line speed of the card wire on the surface of the licker-in roller **200** are both greater than the airflow speed of the air inlet, which is 3.322 m/s. Therefore, the card wire on the surface of the licker-in roller **200** will not vibrate under the high-speed cutting of the airflow, such that the noise will not be generated. In this way, the device provided herein works well in noise reducing.

Example 2

[0114] As shown in FIG. **2**, a device for removing an impurity in a cotton fiber is provided. A diameter of the saw blade of the saw blade roller **700** is 320 mm. The saw blade roller **700** has a working length of 1024.25 mm and a rotation speed of 700 rpm. The licker-in roller **200** has a diameter of 400 mm and a working length of 1400 mm. The licker-in wire layer **408** composed of the 109-type card wire and the card clothing is evenly wound on the surface of the shell **407** along the circumference. A wounding spacing of the licker-in wire layer **408** is 2 mm. All card wires are arranged on the surface of the shell **407**, and faces to the same direction or are perpendicular to a surface of the licker-in wire layer **408**. A height of the card wire is 3 mm, and a radius R_1 of the licker-in wire layer **408** is 203 mm. A

volume of the card wire occupies 40% of a volume of the licker-in wire layer **408**, and a rotation speed of the licker-in roller **200** is 1440 rpm. A gap between the surface of the saw blade roller **700** and a surface of the licker-in roller **200** is 0.6 mm. A rotation direction of the licker-in roller **200** is opposite to that of the saw blade roller **700**. A gap between the first cover plate **402** and the surface of the licker-in wire layer **408** is 3 mm. A vertical distance between A left end of the first cover plate **402** and a tangent point of the saw blade roller **700** and the licker-in roller **200** is 65 mm, and a right end of the first cover plate **402** of is connected to the windscreen plate. A gap between the windscreen plate and the surface of the licker-in wire layer **408** is 3 mm, and a gap between a left end of the impurity-removing plate **401** and the surface of the licker-in wire layer **408** is 15 mm. A vertical distance between the left end of the impurity-removing plate **401** and the tangent point of the saw blade roller **700** and the licker-in roller **200** is 120 mm. A right end of the impurity-removing plate **401** is connected to the cotton-fiber support plate **404**. A gap between the right end of the impurity-removing plate **401** and the surface of the licker-in wire layer **408** is 60 mm. The surface of the cotton-fiber support plate **404** is provided with an air inlet **410**. The upper part of the saw blade roller **700** close to the licker-in roller **200** is provided with a third cover plate **409**. A gap between a left end of the third cover plate **409** and the surface of the saw blade roller **700** is 3 mm. A right end of the third cover plate **409** is connected to the first cover plate **402**. A distance from the right end of the third cover plate **409** to the surface of the saw blade roller **700** is 21 mm. A ratio of a surface linear speed of the licker-in roller **200** to a surface linear speed of the saw blade roller **700** is 2.57:1.

[0115] If an arc length from the left end of the third cover plate **409** to a connection line of a center of the licker-in roller **200** and a center of the saw blade roller **700** is 32°, it can be from Table 1 that a thickness of the corresponding cotton-fiber floating layer is 6.597 mm, which is less than 21 mm. Therefore, the cotton-fiber floating layer will not touch the first cover plate **402**. As shown in Table 3, the corresponding chord length S is 68.18 mm. S=68.18 mm=2(h_s+0.8L_m), (h_s+0.8L_m)/h_s=3.12>2.57, which means not all of the cotton fiber be pulled away in a straight line in time.

[0116] The test results show that a removing amount of the impurity removal is more than 50%. The linear speed ratio is smaller than 3.12, and the cotton fiber is kneaded into knots and cannot be transferred 100%.

Example 3

[0117] As shown in FIG. **6**, a device for removing an impurity in a cotton fiber is provided. A diameter of the saw blade **701** of the saw blade roller **700** is 320 mm. The saw blade roller **700** has a working length of 1024.25 mm and a rotation speed of 390 rpm. The licker-in roller **200** has a diameter of 250 mm and a working length of 1400 mm. The licker-in wire layer **408** composed of the 109-type card wire and the card clothing is evenly wound on the surface of the shell **407** along the circumference. A wounding spacing of the licker-in wire layer **408** is 2 mm. All card wires are arranged on the surface of the shell **407**, and faces to the same direction or are perpendicular to a surface of the licker-in wire layer **408**. A height of the card wire is 3 mm, and a radius R_1 of the licker-in wire layer **408** is 128.5 mm. A volume of the card wire occupies 40% of a volume of the licker-in wire layer **408**, and a rotation speed of the licker-in roller **200** is 2100 rpm. A gap between the surface of the saw blade roller **700** and a surface of the licker-in roller **200** is 0.6 mm. A rotation direction of the licker-in roller **200** is opposite to that of the saw blade roller **700**. A gap between the first cover plate **402** and the surface of the licker-in wire layer **408** is 3 mm. A vertical distance between A left end of the first cover plate **402** and a tangent point of the saw blade roller **700** and the licker-in roller **200** is 65 mm, and a right end of the first cover plate **402** of is connected to the windscreen plate. A gap between the windscreen plate and the surface of the licker-in wire layer **408** is 3 mm, and a gap between a left end of the impurity-removing plate **401** and the surface of the licker-in wire layer **408** is 15 mm. A vertical distance between the left end of the impurity-removing plate **401** and the tangent point of the saw blade roller **700** and the licker-in roller **200** is 120 mm. A right end of the impurity-removing plate **401** is connected to the cotton-fiber support plate **404**. A gap between the right end of the impurity-removing plate **401** and the surface of the licker-in wire layer **408** is 60 mm. The surface of the cotton-fiber support plate **404** is provided with an air inlet **410**. A ratio of a surface linear speed of the licker-in roller **200** to a surface linear speed of the saw blade roller **700** is 4.30:1.

[0118] In an embodiment, the two side walls of the saw blade roller **700** are respectively provided with a rib **702**, and the saw blade roller **700** can hook and pull cotton fibers from between the rib **702** to form a cotton-fiber floating layer.

[0119] In this example, when the value of 8 is 0.8, an arc M between the rib **702** of the saw blade roller **700** and the end of the first cover plate **402** of the licker-in roller **200** close to the saw blade roller **700** corresponding to the surface of the saw blade roller **700** is 62°, it can be seen in Table 1 that a thickness of the corresponding cotton-fiber floating layers theoretically formed under the action of centrifugal force is 7.12 mm, which is less than 21 mm from the left end of the first cover plate **402** of the licker-in roller to the surface of the saw blade roller **700**, it means that the cotton-fiber floating layer will not touch the first cover plate **402** of the barbed roller. As shown in Table 6-7, the corresponding chord length S is 68.83 mm. S=68.83 mm=2 (h_s+0.8L_m), (h_s+0.8L_m)/h_s=2.86<4.30 means that all cotton fibers can be pulled away in a straight line in time. When the arc M between the rib **702** of the saw blade roller **700** and the end of the first cover plate **402** of the licker-in roller close to the saw blade roller **700**, corresponding to the surface of the saw blade roller **700** is greater than 62°, the licker-in roller **200** of this example can realize the complete transfer of cotton fibers from the saw blade roller **700** at the same rotation speed. When the cotton fibers remain completely pulled off the ribs **702**, the thickness of the cotton-fiber floating layers is L_m×sin θ=13.51−20.84 mm. The cotton-fiber floating layer can maintain this thickness under the centrifugal action of the saw blade **701**. Actually, the condition of the returned cotton fiber is also monitored on the lower side of the saw blade roller **700**. No cotton fiber is found to be entrained after the saw blade roller **700** rotated away from the cotton brushing area **414**.

TABLE 6

Chord (mm) The radius of the licker-in roller (mm)	The thickness B of the floating layer (mm) 7.12	7.65	9.13	13.32	13.54	14.31
125	60.70	63.13	69.48	84.94	85.68	88.20
160	64.97	67.58	74.42	91.12	91.92	94.66
180	66.91	69.61	76.66	93.93	94.76	97.59
200	68.60	71.36	78.61	96.36	97.20	100.12
203	68.83	71.61	78.88	96.69	97.54	100.47
220	70.06	72.90	80.30	98.47	99.34	102.33
240	71.36	74.24	81.80	100.33	101.22	104.27
260	72.51	75.44	83.13	101.98	102.89	105.99
310.5	74.92	77.95	85.90	105.44	106.37	109.59

[0120] Table 6 shows the supplementary calculation results of the chord S in the intersecting area of the circular cotton-fiber floating layer produced by the rotation of the saw blade roller **700** and the licker-in roller **200**.

[0121] The linear speed ratio of the licker-in roller **200** to the saw blade roller **700** corresponding to the chord length S above is shown in Table 7.

TABLE 7

The linear speed ratio of the licker-in roller to the saw blade roller The radius of the licker-in roller (mm)	The thickness B of the cotton-fiber floating layer (mm) 7.12	7.65	9.13	13.32	13.54	14.31
125	3.82	3.44	2.82	2.12	2.10	2.03
160	3.22	2.97	2.51	1.97	1.95	1.90
180	3.03	2.81	2.41	1.91	1.90	1.85
200	2.88	2.69	2.33	1.87	1.85	1.81
203	2.86	2.67	2.31	1.86	1.85	1.80
220	2.77	2.59	2.26	1.83	1.82	1.78
240	2.69	2.52	2.21	1.81	1.79	1.75
260	2.62	2.46	2.17	1.78	1.77	1.73
310.5	2.49	2.35	2.09	1.74	1.73	1.69

Example 4

[0122] Referring to FIG. **2**, a device for removing an impurity in a cotton fiber is provided. A diameter of the saw blade **701** of the saw blade roller **700** is 320 mm. The saw blade roller **700** has a working length of 1024.25 mm and a rotation speed of 500 rpm. The licker-in roller **200** has a diameter of 400 mm and a working length of 1400 mm. The licker-in wire layer **408** composed of the 109-type card wire and the card clothing is evenly wound on the surface of the shell **407** along the circumference. A wounding spacing of the licker-in wire layer **408** is 2 mm. All card wires are arranged on the surface of the shell **407**, and faces to the same direction or are perpendicular to a surface of the licker-in wire layer **408**. A height of the card wire is 3 mm, and a radius R_1 of the licker-in wire layer **408** is 203 mm. A volume of the card wire occupies 40% of a volume of the licker-in wire layer **408**, and a rotation speed of the licker-in roller **200** is 1040 rpm. A gap between the surface of the saw blade roller **700** and a surface of the licker-in roller **200** is 0.6 mm. A rotation direction of the licker-in roller **200** is opposite to that of the saw blade roller **700**. A gap between the first cover plate **402** and the surface of the licker-in wire layer **408** is 3 mm. A vertical distance between A left end of the first cover plate **402** and a tangent point of the saw blade roller **700** and the licker-in roller **200** is 65 mm, and a right end of the first cover plate **402** of is connected to the windscreen plate. A gap between the windscreen plate and the surface of the licker-in wire layer **408** is 3 mm, and a gap between a left end of the impurity-removing plate **401** and the surface of the licker-in wire layer **408** is 15 mm. A vertical distance between the left end of the impurity-removing plate **401** and the tangent point of the saw blade roller **700** and the licker-in roller **200** is 120 mm. A right end of the impurity-removing plate **401** is connected to the cotton-fiber support plate **404**. A gap between the right end of the impurity-removing plate **401** and the surface of the licker-in wire layer **408** is 60 mm. The surface of the cotton-fiber support plate **404** is provided with an air inlet **410**. A ratio of a surface linear speed of the licker-in roller **200** to a surface linear speed of the saw blade roller **700** is 2.639:1.

[0123] In this example, when the value of c is 0.8, an arc M between a rib **702** of the saw blade roller **700** and the end of the first cover plate **402** of the licker-in roller **200** close to the saw blade roller **700** corresponding to a surface of the saw blade roller **700** is 52°, it can be seen in Table 1 that a thickness of the cotton-fiber floating layers theoretically formed under the action of centrifugal force of the saw blade roller **700** is 7.65 mm<21 mm, it means that the cotton-fiber floating layer will not touch the first cover plate **402** of the licker-in roller. As shown in Table 6-7, the corresponding chord length S is 71.61 mm. S=71.61 mm=$2(h_s+0.8L_m)$, $(h_s+0.8L_m)/h_s=2.67>2.639$ means that all cotton fibers cannot be pulled away in a straight line in time.

[0124] If an arc M between the rib **702** of the saw blade roller **700** and the end of the first cover plate **402** of the licker-in roller **200** close to the saw blade roller **700** corresponding to the surface of the saw blade roller **700** is 62°, It can be seen in Table 1 that the thickness of the cotton-fiber floating layers formed under the action of centrifugal force is 9.13 mm, which is less than 21 mm from the left end of the first cover plate **402** of the licker-in roller **200** to the surface of the saw blade roller **700**, it means that the cotton-fiber floating layer will not touch the first cover plate **402** of the licker-in roller **200**. As shown in Table 6-7, the corresponding chord length S is 78.88 mm. S=78.88 mm=2 $(h_s+0.8L_m)$, $(h_s+0.8L_m)/h_s=2.31<2.6$ means that all cotton fibers can be pulled away in a straight line in time. When the arc M between the rib **702** of the saw blade roller **700** and the end of the first cover plate **402** of the licker-in roller **200** close to the saw blade roller **700** corresponding to the surface of the saw blade roller **700** is greater than 62°, the licker-in roller **200** of this example can realize the complete transfer of cotton fibers from the saw blade roller **700** at the same rotation speed. When the cotton fibers remain completely pulled off the ribs **702**, the thickness of the cotton-fiber floating layers is $L_m \times \sin\theta$=13.51-20.84 mm. The cotton-fiber floating layer can maintain this thickness under the centrifugal action of the saw blade **701**. Actually, the condition of the returned cotton fiber is also monitored on the lower side of the saw blade roller **700**. No cotton fiber is found to be entrained after the saw blade roller **700** rotated away from the cotton brushing area **414**.

Example 5

[0125] Referring to FIG. **2**, a device for removing an impurity in a cotton fiber is provided. A diameter of the saw blade **701** of the saw blade roller **700** is 320 mm. The saw blade roller **700** has a working length of 1024.25 mm and a rotation speed of 650 rpm. The licker-in roller **200** has a diameter of 400 mm and a working length of 1400 mm. The licker-in wire layer **408** composed of the 109-type card wire and the card clothing is evenly wound on the surface of the shell **407** along the circumference. A wounding spacing of the licker-in wire layer **408** is 2 mm. All card wires are arranged on the surface of the shell **407**, and faces to the same direction or are perpendicular to a surface of the licker-in wire layer **408**. A height of the card wire is 3 mm, and a radius R_1 of the licker-in wire layer **408** is 203 mm. A volume of the card wire occupies 40% of a volume of the licker-in wire layer **408**, and a rotation speed of the licker-in roller **200** is 1365 rpm. A gap between the surface of the saw blade roller **700** and a surface of the licker-in roller **200** is 0.6 mm. A rotation direction of the licker-in roller **200** is opposite to that of the saw blade roller **700**. A gap between the first cover plate **402** and the surface of the licker-in wire layer **408** is 3 mm. A vertical distance between A left end of the first cover plate **402** and a tangent point of the saw blade roller **700** and the licker-in roller **200** is 65 mm, and a right end of the first cover plate **402** of is connected to the windscreen plate. A gap between the windscreen plate and the surface of the licker-in wire layer **408** is 3 mm, and a gap between a left end of the impurity-removing plate **401** and the surface of the licker-in wire layer **408** is 15 mm. A vertical distance between the left end of the impurity-removing plate **401** and the tangent point of the saw blade roller **700** and the licker-in roller **200** is 120 mm. A right end of the impurity-removing plate **401** is connected to the cotton-fiber support plate **404**. A gap between the right end of the impurity-removing plate **401** and the surface of the licker-in wire layer **408** is 60 mm. The surface of the cotton-fiber support plate **404** is provided with an air inlet **410**. A ratio of a surface linear speed of the licker-in roller **200** to a surface linear speed of the saw blade roller **700** is 2.664:1.

[0126] In this example, when the value of ε is 0.8, an arc M between the rib **702** of the saw blade roller **700** and the end of the first cover plate **402** of the licker-in roller **200** close to the saw blade roller **700** corresponding to the surface of the saw blade roller **700** is 42°, it can be seen in Table 1 that the thickness of the cotton-fiber floating layers formed under the action of centrifugal force of the saw blade roller **700** is 8.04 mm, which is less than 21 mm from the left end of the first cover plate **402** of the licker-in roller **200** to the surface of the saw blade roller **700**, it means that the cotton-fiber floating layer will not touch the first cover plate **402** of the licker-in roller **200**. As shown in Table 6-7, the corresponding chord length S is 73.39 mm. S=73.39 mm=2 (h_s+0.8L_m) and (h_s+0.8L_m)/h_s=2.57<2.664 mean that all cotton fibers can be pulled away in a straight line in time.

[0127] When the arc M between the rib **702** of the saw blade roller **700** and the end of the first cover plate **402** of the licker-in roller **200** close to the saw blade roller **700**, corresponding to the surface of the saw blade roller **700** is greater than 42°, the licker-in roller **200** of this example can realize the complete transfer of cotton fibers from the saw blade roller **700** at the same rotation speed. When the cotton fibers remain completely pulled off the ribs **702**, the thickness of the cotton-fiber floating layers is L_m×sin θ=13.51-20.84 mm. The cotton-fiber floating layer can maintain this thickness under the centrifugal action of the saw blade **701**. Actually, the condition of the returned cotton fiber is also monitored on the lower side of the saw blade roller **700**. No cotton fiber is found to be entrained after the saw blade roller **700** rotated away from the cotton brushing area **414**.

Example 6

[0128] Referring to FIG. **2**, a device for removing an impurity in a cotton fiber is provided. A diameter of the saw blade **701** of the saw blade roller **700** is 320 mm. The saw blade roller **700** has a working length of 1024.25 mm and a rotation speed of 675 rpm. The licker-in roller **200** has a diameter of 615 mm and a working length of 1400 mm. The licker-in wire layer **408** composed of the 109-type card wire and the card clothing is evenly wound on the surface of the shell **407** along the circumference. A wounding spacing of the licker-in wire layer **408** is 2 mm. All card wires are arranged on the surface of the shell **407**, and faces to the same direction or are perpendicular to a surface of the licker-in wire layer **408**. A height of the card wire is 3 mm, and a radius R_1 of the licker-in wire layer **408** is 310.5 mm. A volume of the card wire occupies 40% of a volume of the licker-in wire layer **408**, and a rotation speed of the licker-in roller **200** is 618 rpm. A gap between the surface of the saw blade roller **700** and a surface of the licker-in roller **200** is 0.6 mm. A rotation direction of the licker-in roller **200** is opposite to that of the saw blade roller **700**. A gap between the first cover plate **402** and the surface of the licker-in wire layer **408** is 3 mm. A vertical distance between A left end of the first cover plate **402** and a tangent point of the saw blade roller **700** and the licker-in roller **200** is 65 mm, and a right end of the first cover plate **402** of is connected to the windscreen plate. A gap between the windscreen plate and the surface of the licker-in wire layer **408** is 3 mm, and a gap between a left end of the impurity-removing plate **401** and the surface of the licker-in wire layer **408** is 15 mm. A vertical distance between the left end of the impurity-removing plate **401** and the tangent point of the saw blade roller **700** and the licker-in roller **200** is 120 mm. A right end of the impurity-removing plate **401** is connected to the cotton-fiber support plate **404**. A gap between the right end of the impurity-removing plate **401** and the surface of the licker-in wire layer **408** is 60 mm. The surface of the cotton-fiber support plate **404** is provided with an air inlet **410**. A ratio of a surface linear speed of the licker-in roller **200** to a surface linear speed of the saw blade roller **700** is 1.776:1.

[0129] In this example, when the value of ε is 0.8, an arc M between the rib **702** of the saw blade roller **700** and the end of the first cover plate **402** of the licker-in roller **200** close to the saw blade roller **700** corresponding to the surface of the saw blade roller **700** is 72°, it can be seen in Table 1 that the thickness of the cotton-fiber floating layers formed under the action of centrifugal force of the saw blade roller **700** is 14.31 mm, which is less than 21 mm from the left end of the first cover plate **402** of the licker-in roller **200** to the surface of the saw blade roller **700**, it means that the cotton-fiber floating layer will not touch the first cover plate **402** of the licker-in roller **200**. As shown in Table 6-7, the corresponding chord length S is 109.59 mm. S=109.59 mm=2(h_s+0.8L_m), (h_s+0.8L_m)/h_s=1.69<1.776 means that all cotton fibers can be pulled away in a straight line in time.

[0130] When the arc M between the rib **702** of the saw blade roller **700** and the end of the first cover plate **402** of the licker-in roller **200** close to the saw blade roller **700**, corresponding to the surface of the saw blade roller **700** is greater than 72°, the licker-in roller **200** of this example can realize the complete transfer of cotton fibers from the saw blade roller **700** at the same rotation speed. When the cotton fibers remain completely pulled off the ribs **702**, the thickness of the cotton-fiber floating layers is $L_m \times \sin\theta$=13.51-20.84 mm. The cotton-fiber floating layer can maintain this thickness under the centrifugal action of the saw blade **701**. Actually, the condition of the returned cotton fiber is also monitored on the lower side of the saw blade roller **700**. No cotton fiber is found to be entrained after the saw blade roller **700** rotated away from the cotton brushing area **414**.

Example 7

[0131] Referring to FIG. **2**, a device for removing an impurity in a cotton fiber is provided. A diameter of the saw blade **701** of the saw blade roller **700** is 320 mm. The saw blade roller **700** has a working length of 1024.25 mm and a rotation speed of 780 rpm. The licker-in roller **200** has a diameter of 615 mm and a working length of 1400 mm. The licker-in wire layer **408** composed of the 109-type card wire and the card clothing is evenly wound on the surface of the shell **407** along the circumference. A wounding spacing of the licker-in wire layer **408** is 2 mm. All card wires are arranged on the surface of the shell **407**, and faces to the same direction or are perpendicular to a surface of the licker-in wire layer **408**. A height of the card wire is 3 mm, and a radius R_1 of the licker-in wire layer **408** is 310.5 mm. A volume of the card wire occupies 40% of a volume of the licker-in wire layer **408**, and a rotation speed of the licker-in roller **200** is 730 rpm. A gap between the surface of the saw blade roller **700** and a surface of the licker-in roller **200** is 0.6 mm. A rotation direction of the licker-in roller **200** is opposite to that of the saw blade roller **700**. A gap between the first cover plate **402** and the surface of the licker-in wire layer **408** is 3 mm. A vertical distance between A left end of the first cover plate **402** and a tangent point of the saw blade roller **700** and the licker-in roller **200** is 65 mm, and a right end of the first cover plate **402** of is connected to the windscreen plate. A gap between the windscreen plate and the surface of the licker-in wire layer **408** is 3 mm, and a gap between a left end of the impurity-removing plate **401** and the surface of the licker-in wire layer **408** is 15 mm. A vertical distance between the left end of the impurity-removing plate **401** and the tangent point of the saw blade roller **700** and the licker-in roller **200** is 120 mm. A right end of the impurity-removing plate **401** is connected to the cotton-fiber support plate **404**. A gap between the right end of the impurity-removing plate **401** and the surface of the licker-in wire layer **408** is 60 mm. The surface of the cotton-fiber support plate **404** is provided with an air inlet **410**. A ratio of a surface linear speed of the licker-in roller **200** to a surface linear speed of the saw blade roller **700** is 1.816:1.

[0132] In this example, when the value of c is 0.8, an arc M between the rib **702** of the saw blade roller **700** and the end of the first cover plate **402** of the licker-in roller **200** close to the saw blade roller **700** corresponding to the surface of the saw blade roller **700** is 58°, it can be seen in Table 1 that the thickness of the cotton-fiber floating layers formed under the action of centrifugal force of the saw blade roller **700** is 13.32 mm, which is less than 21 mm from the left end of the first cover plate **402** of the licker-in roller **200** to the surface of the saw blade roller **700**, it means that the cotton-fiber floating layer will not touch the first cover plate **402** of the licker-in roller **200**. As shown in Table 6-7, the corresponding chord length S is 105.44 mm. S=105.44 mm=$2(h_s+0.8L_m)$, $(h_s+0.8L_m)/h_s$=1.74<1.816 means that all cotton fibers can be pulled away in a straight line in time.

[0133] When the arc M between the rib **702** of the saw blade roller **700** and the end of the first cover plate **402** of the licker-in roller **200** close to the saw blade roller **700**, corresponding to the surface of the saw blade roller **700** is greater than 58°, the licker-in roller **200** of this example can realize the complete transfer of cotton fibers from the saw blade roller **700** at the same rotation speed. When the cotton fibers remain completely pulled off the ribs, the thickness of the cotton-fiber floating layers is $L_m \times \sin\theta$=13.51-20.84 mm. The cotton-fiber floating layer can maintain this thickness under the centrifugal action of the saw blade **701**. Actually, the condition of the returned cotton fiber is also monitored on the lower side of the saw blade roller **700**. No cotton fiber is found to be entrained after the saw blade roller **700** rotated away from the cotton brushing area **414**.

Example 8

[0134] Referring to FIG. **2**, a device for removing an impurity in a cotton fiber is provided. A diameter of the saw blade **701** of the saw blade roller **700** is 320 mm. The saw blade roller **700** has a working length of 1024.25 mm and a rotation speed of 500 rpm. The licker-in roller **200** has a diameter of 615 mm and a working length of 1400 mm. The licker-in wire layer **408** composed of the 109-type card wire and the card clothing is evenly wound on the surface of the shell **407** along the circumference. A wounding spacing of the licker-in wire layer **408** is 2 mm. All card wires are arranged on the surface of the shell **407**, and faces to the same direction or are perpendicular to a surface of the licker-in wire layer **408**. A height of the card wire is 3 mm, and a radius R_1 of the licker-in wire layer **408** is 310.5 mm. A volume of the card wire occupies 40% of a volume of the licker-in wire layer **408**, and a rotation speed of the licker-in roller **200** is 455 rpm. A gap between the surface of the saw blade roller **700** and a surface of the licker-in roller **200** is 0.6 mm. A rotation direction of the licker-in roller **200** is opposite to that of the saw blade roller **700**. A gap between the first cover plate **402** and the surface of the licker-in wire layer **408** is 3 mm. A vertical distance between A left end of the first cover plate **402** and a tangent point of the saw blade roller **700** and the licker-in roller **200** is 65 mm, and a right end of the first cover plate **402** of is connected to the windscreen plate. A gap between the windscreen plate and the surface of the licker-in wire layer **408** is 3 mm, and a gap between a left end of the impurity-removing plate **401** and the surface of the licker-in wire layer **408** is 15 mm. A vertical distance between the left end of the impurity-removing plate **401** and the tangent point of the saw blade roller **700** and the licker-in roller **200** is 120 mm. A right end of the impurity-removing plate **401** is connected to the cotton-fiber support plate **404**. A gap between the right end of the impurity-removing plate **401** and the surface of the licker-in wire layer **408** is 60 mm. The surface of the cotton-fiber support plate **404** is provided with an air inlet

410. A ratio of a surface linear speed of the licker-in roller **200** to a surface linear speed of the saw blade roller **700** is 1.76:1.

[0135] In this example, when the value of ε is 0.8, an arc M between the rib **702** of the saw blade roller **700** and the end of the first cover plate **402** of the licker-in roller **200** close to the saw blade roller **700** corresponding to the surface of the saw blade roller **700** is 92°, it can be seen in Table 1 that the thickness of the cotton-fiber floating layers formed under the action of centrifugal force of the saw blade roller **700** is 13.54 mm, which is less than 21 mm from the left end of the first cover plate **402** of the licker-in roller **200** to the surface of the saw blade roller **700**, it means that the cotton-fiber floating layer will not touch the first cover plate **402** of the licker-in roller **200**. As shown in Table 6-7, the corresponding chord length S is 109.59 mm. S=109.59 mm=$2(h_s+0.8L_m)$, $(h_s+0.8L_m)/h_s=1.73<1.76$ means that all cotton fibers can be pulled away in a straight line in time.

[0136] When the arc M between the rib **702** of the saw blade roller **700** and the end of the first cover plate **402** of the licker-in roller **200** close to the saw blade roller **700**, corresponding to the surface of the saw blade roller **700** is greater than 92°, the licker-in roller **200** of this example can realize the complete transfer of cotton fibers from the saw blade roller **700** at the same rotation speed. When the cotton fibers remain completely pulled off the ribs **702**, the thickness of the cotton-fiber floating layers is $L_m\times\sin\theta=13.51-20.84$ mm. The cotton-fiber floating layer can maintain this thickness under the centrifugal action of the saw blade **701**. Actually, the condition of the returned cotton fiber is also monitored on the lower side of the saw blade roller **700**. No cotton fiber is found to be entrained after the saw blade roller **700** rotated away from the cotton brushing area **414**.

[0137] The principle of the high efficiency for the device provided herein to remove the impurity in the cotton fiber is described as follow.

[0138] Referring to FIG. **2**, the surface of the licker-in roller **200** is provided with the licker-in wire layer **408**, which can provide a strong holding force to the cotton fibers. In addition, the licker-in roller **200** and the saw blade roller **700** are arranged in a non-contact manner. During the transfer process, the impurity that has already been exposed on the saw blade roller **700** will not be combined with the cotton fiber again, whereas since the cotton fiber is lighter, thinner, longer and rougher than the impurities, the cotton fiber is easy to be held by the card wire; impurities such as infertile seeds, leaf crumbs, cottonseed hulls, cottonseed covers, are heavy, small, short and smooth, they are not easy to be held by the card wire. Therefore, after being transferred to the licker-in roller **200**, the cotton fiber moves forward with the rotation of the licker-in roller **200**. Whereas the gripping force of the licker-in roller **200** on the impurity is small, and under the action of the centrifugal force of the licker-in roller **200**, the impurity is easy to be thrown out of the cotton fiber layer. The impurity is blocked by the movable impurity-removing plate **401** arranged at the lower part of the licker-in roller **200** and then is discharged out of the device. In this way, the impurity-removing efficiency of the device having the roller with the card wire is more than 50%, which exceeds the impurity-removing efficiency required by the standard GB/T 21208-2007 for the lint cleaning device and the standard GH/T1023-2000 for the linter cleaning device. The device provided herein integrates the saw ginning and lint cleaning, and the saw delinting and linter cleaning.

[0139] The embodiments provided herein are not intended to limit the scope of this disclosure, and modifications, replacements and improvements made by those skilled in the art within the spirit of the present disclosure should fall within the scope of the present disclosure defined by the appended claims. When the rotation speed of the saw blade roller **700** is 10 rpm, a ratio of the linear speed of the licker-in roller **200** to the linear speed of the saw blade roller **700** is greater than the values in Table 3, which means the cotton fiber can still be completely transferred. In addition, as shown in Table 3, the thickness of the cotton-fiber floating layer on the surface of the saw blade roller **700** is 13.51-20.84 mm.

What is claimed is:

1. A device for transferring a cotton fiber, comprising:

a saw blade roller;

a licker-in roller;

a cotton-fiber support plate which is arc-shaped;

a first cover plate;

a guide plate;

a windscreen plate; and

two box plates arranged oppositely;

wherein the two box plates are arranged at two ends of the licker-in roller and the saw blade roller, respectively; the first cover plate and the cotton-fiber support plate are arranged between the two box plates from top to bottom; a cylindrical cavity is enclosed by the cotton-fiber support plate and the first cover plate; an arc surface of the cylindrical cavity is provided with a first window and a second window arranged oppositely; the first window is communicated with an exit channel enclosed by the guide plate and the windscreen plate between the two box plates; the licker-in roller is arranged in the cylindrical cavity along an axial direction of the cylindrical cavity; the saw blade roller is arranged in the second window facing away from the exit channel; an axis of the saw blade roller is parallel to an axis of the licker-in roller; a gap between a surface of the saw blade roller and a surface of the licker-in roller is no more than 5 mm; the cotton fiber is capable of rotating with the saw blade roller to form a cotton-fiber floating layer; a linear speed of the licker-in roller is great than a linear speed of the saw blade roller during rotation; and a rotation direction of the saw blade roller is opposite to a rotation speed of the licker-in roller to allow the cotton fiber to be transferred from the saw blade roller to the licker-in roller.

2. The device of claim **1**, wherein the saw blade is provided with a plurality of saw blades; an outer circumference of each of the plurality of saw blades is provided with teeth; two opposite side walls of each of the plurality of saw blades are respectively provided with a rib; the saw blade roller is configured to hook and pull the cotton fiber from between ribs to form an initial floating layer with a thickness of $L_m\times\sin t$, wherein L_m is a length of the cotton fiber; t is an angle between the cotton fiber and a tangent line of the saw blade roller at an intersection of the cotton fiber and the saw blade roller; $t=\theta=40\pm4°$; and θ is an angle between an entrance side of the teeth of the saw blade roller and a normal plane of the teeth passing through a top of the teeth.

3. The device of claim 2, wherein a licker-in wire layer is evenly wound on an outer circumference of the licker-in roller; a gap between the first cover plate and the licker-in wire layer is no larger than 5 mm; and a gap between the windscreen plate and the licker-in wire layer is no larger than 5 mm.

4. The device of claim 3, wherein an end of the first cover plate close to the saw blade roller is a starting end; a distance from the starting end to the saw blade roller is larger than the thickness of the initial floating layer; a distance from the starting end to a line connecting a center of the saw blade roller to a center of the licker-in roller is larger than half of a length S of a chord shared by a virtual circumference of the initial floating layer and a circumference of the licker-in roller; a ratio of the linear speed of the licker-in roller to the linear speed of the saw blade roller is no less than

$$\frac{S}{S-2\varepsilon L_m},$$

wherein ε is an inclination coefficient of the cotton fiber, and selected from 0.8-1.

5. The device of claim 2, wherein an arc M of the surface of the saw blade roller between the rib of the saw blade roller and an end of the first cover plate close to the saw blade roller is 42-180°.

6. The device of claim 2, wherein the saw blade roller is provided with a plurality of second cover plates spaced apart; an end of each of the plurality of second cover plates is connected to the first cover plate; an arc M of the surface of the saw blade roller covered by each of the plurality of second cover plates is 42-180°; a distance between an end of each of the plurality of second cover plates close to the first cover plate and the surface of the saw blade roller is larger than 21 mm; and a distance between an end of each of the plurality of second cover plates away from the first cover plate and the surface of the saw blade roller is 3-10 mm.

7. The device of claim 6, wherein the number N of rotations of the cotton fiber rotating with the saw blade roller under the plurality of second cover plates is larger than $(M)/(2\Pi r_j)$; r_j is a radius of the saw blade roller; a thickness B of the cotton-fiber floating layer is calculated according to a critical diameter formula of a cyclone separator as follows:

$$B=\frac{d_c^2\prod(M)2\prod r_j w\rho_s}{2\prod r_j * 9\mu}=\frac{d_c^2\prod(M)w\rho_s}{9\mu};$$

wherein w is a rotating speed of the saw blade roller; d_c is a diameter of the cotton fiber; ρ_s is a proportion of the cotton fiber in the cotton-fiber floating layer; and μ, is a fluid viscosity of air; and Π is Pi.

8. The device of claim 6, wherein a length S of a chord of the saw blade roller intersecting with the initial floating layer or the cotton-fiber floating layer under the plurality of second cover plates is calculated as follows:

$$S=2\sqrt{R_c^2-\left(\frac{R_c^2-(r_j+B)^2+(r_j+R_c+x)}{2(r_j+R_c+x)}\right)^2};$$

wherein B is a thickness of the initial floating layer, R_c is a radius of the licker-in roller; r_j is the radius of the saw blade roller; and x is a distance between the surface of the saw blade roller and the surface of the licker-in roller.

9. A device for removing an impurity in a cotton-fiber, comprising

the device of claim 8; and

an impurity-removing plate;

wherein the impurity-removing plate is arranged on a side of the cotton-fiber support plate close to the saw blade roller; the impurity-removing plate is detachably connected to the two box plates; the licker-in roller is capable of rotating with respect to the first cover plate to form a low pressure zone on a side of the plurality of second cover plates, so as to reduce an air resistance to the cotton fiber when the cotton fiber rotates centrifugally with the saw blade roller in the low pressure zone.

10. The device of claim 9, wherein the cotton-fiber support plate is provided with an air compensation port.

11. The device of claim 9, wherein an angle between a line connecting an end of the impurity-removing plate close to the saw blade roller to a center of the licker-in roller and a line connecting the center of the licker-in roller to a center of the saw blade roller is 20-60°; and a distance between an upper end of the impurity-removing plate and the licker-in roller is 15-45 mm.

12. A method for transferring a cotton fiber using the device of claim 4, comprising:

rotating the saw blade roller to drive a cotton fiber with an impurity to rotate for N circles to form a cotton-fiber floating layer with a thickness of B;

rotating the licker-in roller to remove the impurity from a surface of the cotton fiber in the cotton-fiber floating layer hooked by the licker-in layer or the teeth through an impurity-removing plate; and

discharging the impurity and a processed cotton fiber through the exit channel;

wherein a cotton-brushing area with a length of S is formed on the licker-in roller intersecting with the cotton-fiber floating layer; the ratio of the linear speed of the licker-in roller to the linear speed of the saw blade roller is no less than

$$\frac{S}{S-2\varepsilon L_m};$$

L_m is a length of the cotton fiber; S is larger than $2\varepsilon L_m$; and ε is the inclination coefficient of the cotton fiber, and is selected from 0.8-1.

* * * * *