United States Patent [19]

Stillbert

[11] **3,735,063**

[45] **May 22, 1973**

[54] **TIME CONTROLLED AUTOMATIC PROGRAMMING DEVICE WITH ADJUSTABLE PINS ON PROGRAMMING DRUM AND ADJUSTABLE CONTACT ARRAY**

[76] Inventor: **Leonard R. Stillbert,** 3218 W. State Avenue, Phoenix, Ariz. 85021

[22] Filed: **Mar. 28, 1972**

[21] Appl. No.: **238,886**

[52] **U.S. Cl.**.....**200/38 CA,** 200/27 B, 200/153 LB, 307/141.8

[51] **Int. Cl.**.....**H01h 43/10**

[58] **Field of Search** .....200/27 R, 27 B, 27 BA, 200/27 BB, 38 B, 38 BA, 38 C, 38 CA, 38 D, 38 DA, 153 LB, 38 FB, 38 R, 166 M; 334/17–19, 50, 51; 340/220, 415; 307/141.8

[56] **References Cited**

UNITED STATES PATENTS

2,917,591	12/1959	Juhas	200/38 BA
3,522,393	7/1970	Banathy et al.	200/38 FB
3,054,992	9/1962	Zoglio	200/27 X
2,045,251	6/1936	Raber	200/38 CA X
2,942,485	6/1960	Misenko	200/38 CA X
2,692,534	10/1954	Pluess	200/38 CA X
3,483,344	12/1969	Hermle	200/38 BA X

Primary Examiner—J. R. Scott
Attorney—Warren F. B. Lindsley

[57] **ABSTRACT**

A programming device removably associated with television, radio, or any other similar receiver which may be manually, selectively adjusted to cause the receiver to automatically function to select particular channels at precise times of day or night. The programming device is also provided with an alarm or call component which functions in conjunction with the device to attract the viewer or listener's attention to a particular preset channel or program at a given time.

5 Claims, 8 Drawing Figures

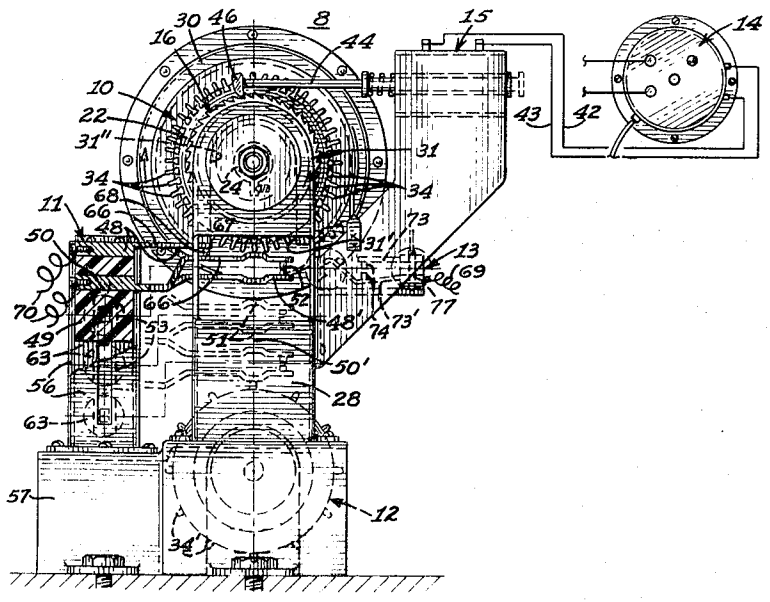

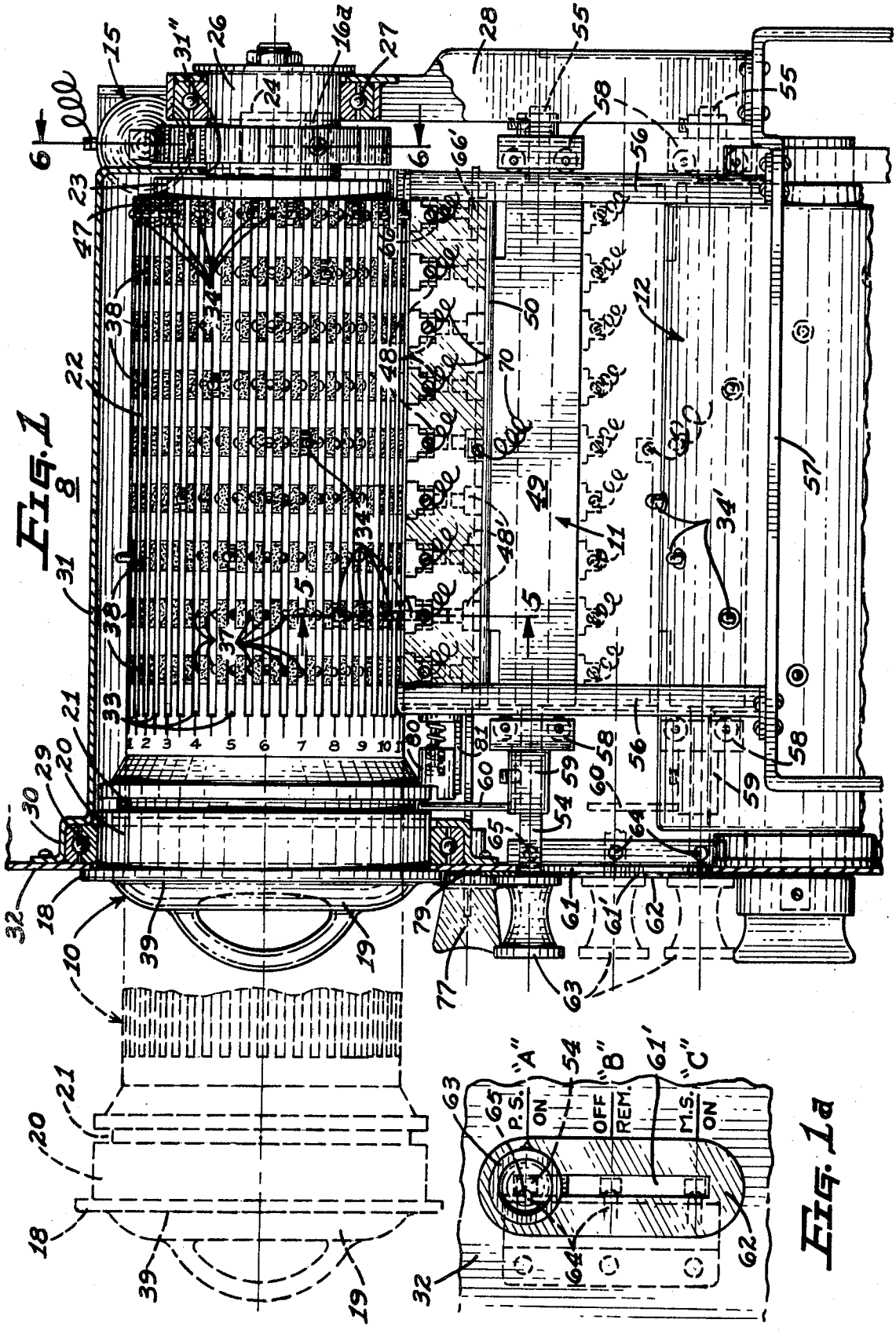
Fig. 1
Fig. 1a
"A"
"B"
"C"
P.S.
ON
OFF
REM.
M.S.
ON

FIG. 2

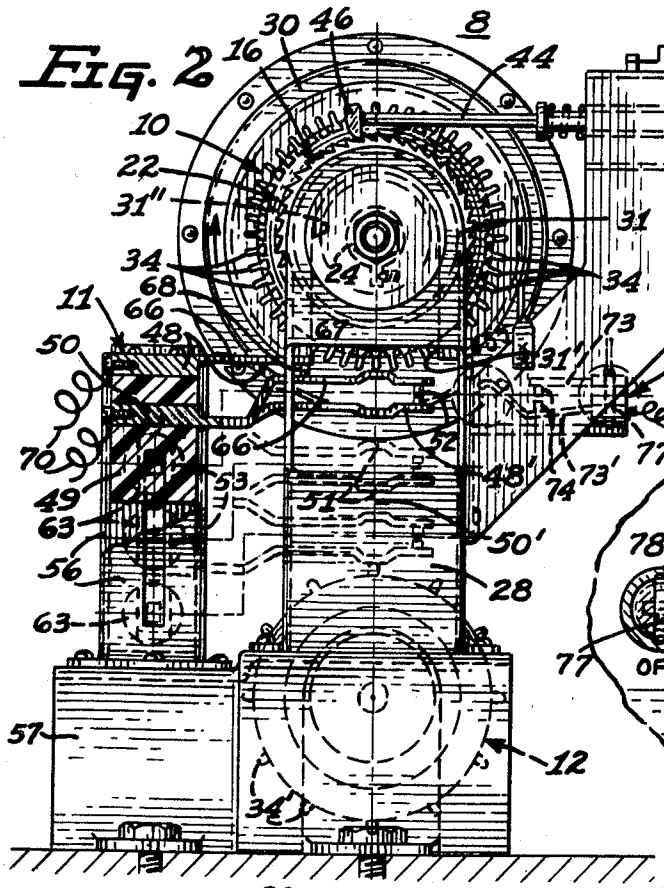

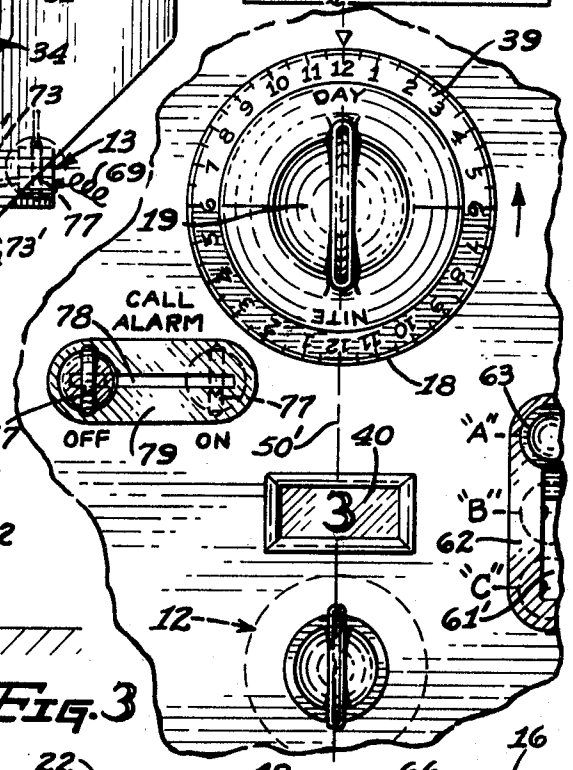

FIG. 3

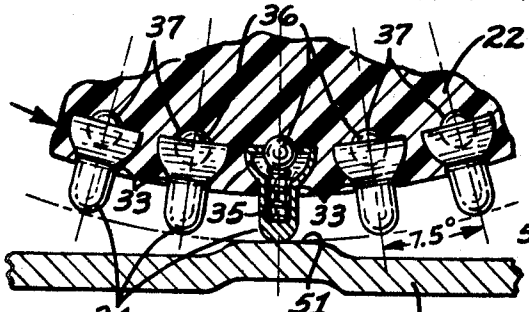

FIG. 5

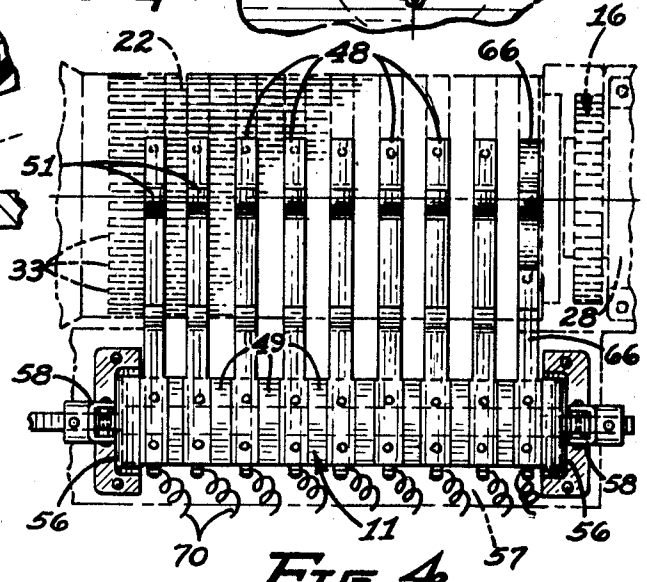

FIG. 4

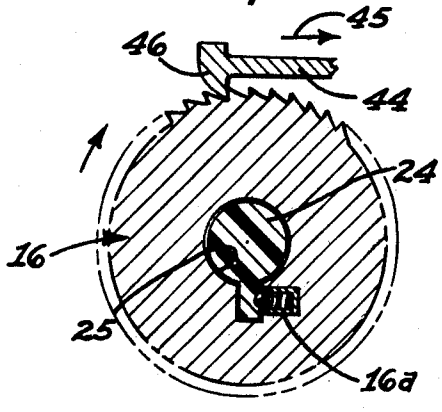

FIG. 6

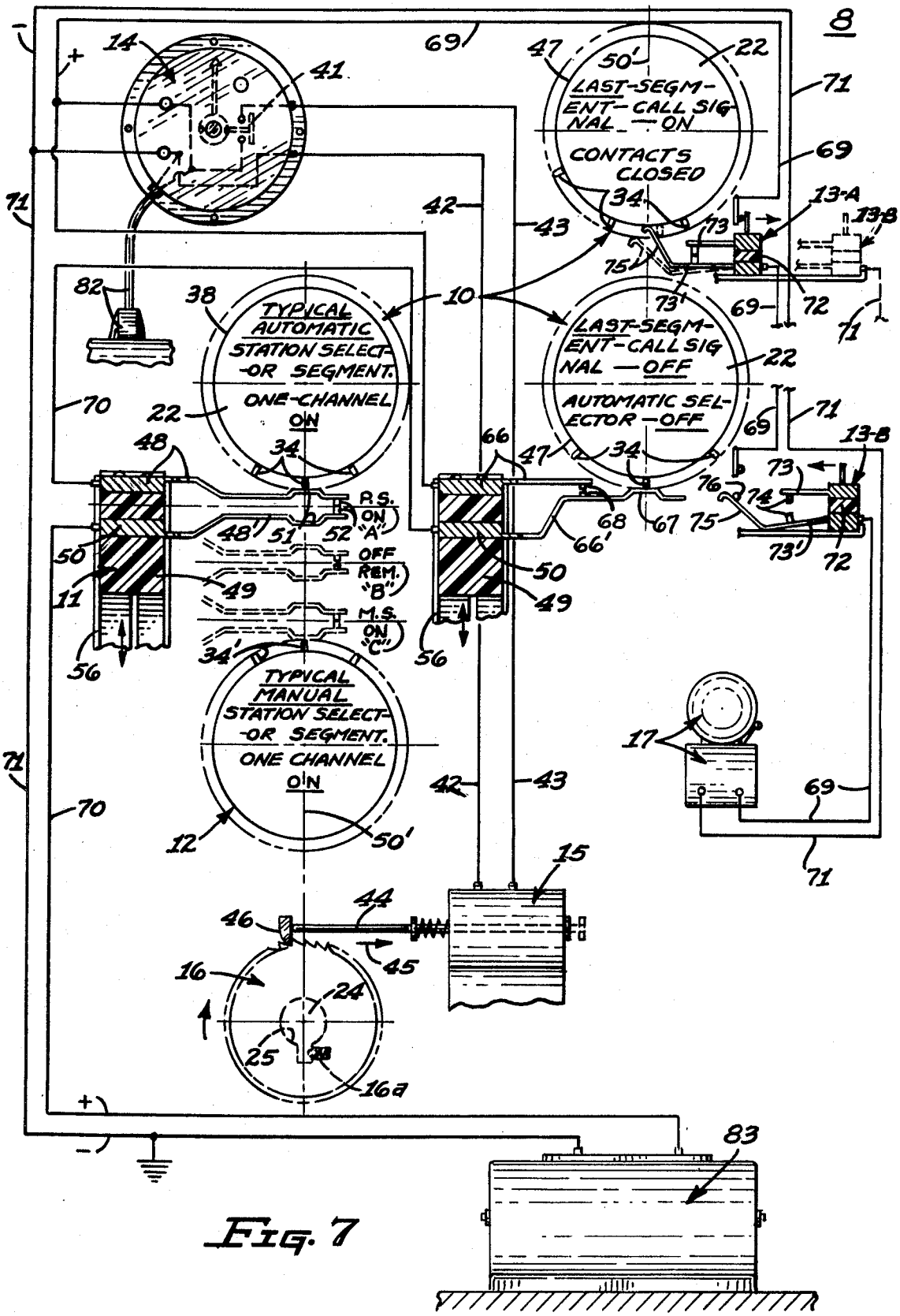
8
LAST-SEGMENT-CALL SIGNAL — ON
CONTACTS CLOSED
LAST-SEGMENT-CALL SIGNAL — OFF
AUTOMATIC SELECTOR — OFF
TYPICAL AUTOMATIC STATION SELECTOR SEGMENT.
ONE-CHANNEL ON
TYPICAL MANUAL STATION SELECTOR SEGMENT.
ONE CHANNEL ON
P.S. ON "A"
OFF REM. "B"
M.S. ON "C"

FIG. 7

TIME CONTROLLED AUTOMATIC PROGRAMMING DEVICE WITH ADJUSTABLE PINS ON PROGRAMMING DRUM AND ADJUSTABLE CONTACT ARRAY

BACKGROUND OF THE INVENTION

This invention relates to programming devices for television and radio receivers and more particularly to a manually adjustable device for scheduling and automatically setting a television or radio receiver to preselected programs during any one-half portion of a 24 hour period.

FIELD OF THE INVENTION

This invention is directed to a programming device and associated apparatus, which may be preset to automatically provide a continuous or intermittent program of television viewing or radio listening during any twenty-four hour period or to repeat the same programs for subsequent twenty-four hour periods, and is capable of being reset at any time to automatically provide different programs.

DESCRIPTION OF THE PRIOR ART

Prior art systems for automatically programming television and radio receivers have been devised, but these systems have been extremely complicated and present great difficulty in setting up or changing a sequence of programs by the average individual. Further, they usually contain a multitude of expensive components which are difficult and costly to assemble.

SUMMARY OF THE INVENTION

In accordance with the present invention a new and improved inexpensive programming device for television and radio receivers is provided which may be readily removed from the receiver, programmed and replaced in the receiver by the average viewer.

The programming device and supporting apparatus of this invention includes a clock-actuated rotatable drum having a plurality of slidable projecting pins which may be positioned to contact and apply pressure to lever arms of a plurality of electrical switches to open or close said switches in pre-set timed relation. These switches activate or deactivate electrical circuits to particular channels of the receiver precisely at each and every half hour interval. An alarm or call signal alerts the viewer to preselected programs.

The disclosed and claimed programming device is simple and inexpensive to fabricate and install in conjunction with the standard components of any television or radio receiver and is easily programmed for receiving television or radio broadcasts in desired timed sequence.

It is, therefore, one object of this invention to provide an improved programming device for radio and television receivers.

Another object of this invention is to provide a removable component of a television or radio receiver which may be selectively adjusted for actuating the program selector of the receiver to provide program selection on a half-hour basis.

A further object of this invention is to provide a new and improved program selecting means for timed operations including indicator lights and audio signals.

A still further object of this invention is to provide new and improved program selector means which are economic to manufacture and easy to operate.

Further objects and advantages of the invention will become apparent as the following description proceeds and the features of novelty which characterize this invention will be pointed out with particularity in the claims annexed to and forming part of this specification.

BRIEF DESCRIPTION OF THE DRAWINGS

The present invention may be more readily described by reference to the accompanying drawings, in which:

FIG. **1** is a side elevational view partly in section of the principle elements of the invention shown in the enclosure of a television or radio cabinet.

FIG. **1***a* is a front elevational view of the switch block positioning control lever with suitable position indicating indicia as seen from the outside of the cabinet.

FIG. **2** is a rear elevational view partly in section of the apparatus shown in FIG. **1**.

FIG. **3** is a fragmentary front elevational view illustrating the respective positions of the control levers and knobs, the channel indicating media and the calibrations and indicia on the face of the revolving programmer dial.

FIG. **4** is a fragmentary top plan view of the switch block utilized in conjunction with the programming device showing its relative relation to the programmer cylinder and support structure in phantom line.

FIG. **5** is a greatly enlarged fragmentary sectional view taken substantially on line **5—5** of FIG. **1** showing slidable contact pins in radial relation to each other in the longitudinal slots in the perimeter of the programming drum and their relation to one of the lever arms of the switches.

FIG. **6** is an enlarged sectional view taken on line **6—6** of FIG. **1** showing a portion of the solenoid actuated shaft with its hooked end in contact with one of the ratchet-like teeth of the drum actuating ratchet wheel and the method of locking the gear wheel to the rear end of the programming drum.

FIG. **7** is a diagrammatic view showing the programming device and its supporting elements as related to each other in several positions of activity, including the time clock propulsion means, the actuating solenoid, the alarm or buzzer device and its switching means, the tuner of a conventional television or radio receiver, and one circuit configuration which completes the system.

DESCRIPTION OF THE PREFERRED EMBODIMENT

Referring more particularly to the drawings by characters of reference, FIGS. **1, 2, 4** and **7** disclose a programming device **8** comprising a rotatable programming drum **10**, a manually positioned channel selector switch block **11**, a conventional manual channel selector device or drum **12**, a manually positioned call signal switch block **13**, electric time control clock **14**, which provides the energy to rotate the programmer drum **10** by means of the electric solenoid **15** through gear or ratchet wheel **16**, alarm or call device **17** and suitable manual controls for operating the system.

Since the operating components of a television, radio, or other electronic receiver of this nature are similar in most respects, and since the automatic programming device of this invention is applicable to all such

systems with only minor changes, if any, this description is directed to the programming device's application on a conventional television chassis or system without limiting its use thereto.

The rotatable programming drum **10** is preferably fabricated of a lightweight, non-conductive plastic material in a cylindrical shape or form, and is provided at its front or outer end with an enlarged flat circular flange or dial **18.** Dial **18** is provided with an integral handle **19.** A collar **20** of a smaller diameter is fastened thereto. The inner end of collar **20** is provided with a circumferential slot or groove **21,** the purpose of which will be explained later. Extending rearwardly from collar **20** and integral therewith is an elongated cylindrical programming drum portion **22** having a reduced end **23,** as shown in FIG. **1.** The reduced end **23** is provided with a keyhole-shaped portion **24** at its extreme end which is adapted to be removably received and supported in a similarly shaped recess **24** in the center of ratchet wheel **16,** as shown in FIGS. **1** and **7,** which has extending bearing portion **26** and is rotatably supported in bearing **27** of a bracket **28** supported by the receiver cabinet.

The front or outer end of the programming drum **10** is rotatably supported on its collar **20** which extends into a bearing **29** supported in the circular front end portion **30** of a guard member **31.** Guard member **31** is secured to the inside face of the cabinet wall **32** by rivets or screws, as shown in FIG. **1.**

The drum portion **22** of programming device **8** is provided with exactly forty-eight longitudinal slots or depressions **33** extending longitudinally of the drum and spaced radially around its outer peripheral surface every seven and one half 7½°. These depressions are arranged parallel to each other throughout their entire length. As shown in FIG. **5,** slots or depressions **33** are widened and curved at their inner ends and each slot is adapted to receive in slidable relation a spring biased contact pressure pin **34.** The central bore of each pressure pin contains a compression spring **35** biasing a ball **36** outwardly thereof to engage one of a plurality of spherical depressions **37** which are formed in the bottom surfaces of the longitudinal slots or depressions **33.**

The programming drum portion **22** is scored or otherwise marked from its rear end forward to divide the drum into a plurality of equal width areas or rings **38** which surround its periphery. The entire area of every other ring may be colored with a different color to serve as identification media for the several television channels which may be programmed. It should be noted that the spherical depressions **37** mentioned above are located in each slot **33,** at the exact center of each colored ring, to assure accurate set up of the desired program.

The rear face of dial **18** of the programming drum **10** is adapted to lie in a vertical plane with slight clearance from the face of the cabinet wall **32** to allow for uninterrupted rotation of the device and to limit its inward movement when being installed after the drum has been programmed. The outer face **39** of dial **18** is provided with suitable calibration marks, indicia and coloring, which divides the dial into two 24-hour periods of day or night, as shown in FIG. **3,** and the calibration marks on the outer rim of the dial divide its circumference into 48 one-half hour periods.

Each half hour mark or calibration is in direct radial alignment with each of the 48 longitudinal slots **33** formed in the periphery of drum portion **22,** which is also provided with corresponding markings and indicia in alignment with each slot **33** on the outer circumferential surface of the drum, as shown in FIG. **1.** The purpose of the visual calibration marks and indicia on the face of the dial which correspond with the conventional markings and indicia on the visual face (not shown) of the time control clock **14** is to aid the television viewer in setting up or scheduling the 24 hour program desired. Together with the visual channel indicator **40,** the viewer may verify that his program is scheduled properly. The purpose of the calibration marks and indicia on the outer circumferential surface of the drum is to aid the operator in setting up or scheduling the preferred timed sequence of the desired program when the programming drum **10** has been removed from the cabinet.

The entire programming drum **10** with its integral drum portion **22** carrying the contact pressure pins **34** in their respective positions in slots **33** and the integral dial **18** and handle **19** are adapted to be rotated in a counter-clockwise direction exactly seven and one half 7½° at the end of each and every one-half hour period.

The time control clock **14** may be any conventional electric powered clock which is provided with suitable relays and switches commonly used in appliances to be energized or deactivated at specific times when so adjusted. Clock **14** is further provided with a relay switch **41,** which is normally open but set to momentarily close at half hour intervals to cause an electrical current to pass through leads **42** and **43** to actuate solenoid **15,** which momentarily moves its shaft **44** in the direction of arrow **45** (FIG. **7**) a sufficient distance to cause pawl **46** at the outer end of shaft **44** to contact one of the teeth on ratchet wheel **16** to rotate the ratchet wheel and hence the programming drum **10** and its integral drum portion **22** exactly 7½° or one forty-eighth of a complete circle. Thus, drum portion **22** is revolving 7½ at the end of each half hour interval, or 48 times during each 24 hour cycle of the clock.

This precise timed action of the above described elements is necessary since most television and radio programs are scheduled at half hour intervals. The contact pressure pins **34** which protrude from slots **33** in drum portion **22** can be arranged in the desired colored areas or rings **38** on the drum so that any particular channel will be activated for half hour intervals, or any multiple of half hour intervals, depending on the placement of the pressure pins **34** in slots **33.**

The last or rearmost colored area or ring **47** on the programming drum portion **22** is utilized to shut off the power to the television or radio receiver for given periods of time. The radial space in this area may be utilized to activate an alarm or call signal device **17** when any particular channel is about to be activated, as will be explained.

The several television channels to be activated at precise half hour intervals as preset and scheduled for the 24 hour cycle on drum portion **22** are caused to be activated at the proper time by the contact pressure of one of pins **34** on one of a plurality of upper and lower switch lever arms **48** and **48'**, respectively. These switch lever arms extend from the channel selector switch block **11** under, over and between the programming drum portion **22** and the manual channel selector drum **12,** as shown in FIGS. **1, 2, 4** and **7** of the drawings.

The upper switch lever arms 48 are fabricated as individual strips of slightly flexible conductive metal which are secured in any suitable manner in transverse rabetts formed in the top surface of the nonconductive plastic switch block 49 as shown in FIG. 4. The lower switch lever arms 48' are fabricated of similar conductive metal, but are formed as an integral part of the bus bar 50 which is embedded in the nonconductive plastic switch block 49. The switch lever arms are parallel to each other and are provided where they cross the vertical center line 50' of the rotatable drum portion 22 and channel selector drum 12 with raised cam portions 51, to avoid contact with more than one of the pressure pins 34 or 34' which project radially from the drums. The switch lever arms are also provided with a pair of mating contact points 52 adjacent their outer ends, thus completing the channel selector switch block assembly 11.

The switch block assembly 11 is required to be manually placed in three vertical positions to perform its several functions, and to this end is provided with an operating bar 53, the greater horizontal portion of which is embedded in the plastic switch block 49. Bar 53 is preferably rectangular in cross section, having reduced front and rear extensions 54 and 55, respectively, which extend through elongated vertical openings in the outer walls of a pair of opposed vertically mounted channel members 56 which are rigidly secured to a suitable horizontal supporting bracket 57 of the cabinet, as shown in FIGS. 1, 2 and 4.

The sides of the switch block assembly 11 are confined between the legs of the pair of channel members 56 in sliding relation therewith and may be moved vertically up and down on roller bracket members 58 which are mounted on the front and rear bar extensions 54 and 55 with their rollers contacting the outer walls of the channel members. The front roller bracket member 58 is provided with a forward extension 59 which has an integral, flat, upwardly projecting arm 60 adapted to loosely fit into the circumferential groove 21 of collar 20 of programming drum portion 22 to prevent lateral movement of the device when the switch block assembly 11 is in the upper operating position. The front bar extension 54 of the switch operating bar 53 continues to extend forwardly through an elongated opening 61 in the cabinet wall 32 and through a mating opening 61' in the escutcheon plate 62 which is mounted on the outside face of the cabinet wall, where it is provided with a firmly attached operating knob 63 which is utilized to manually raise or lower the switch block assembly 11 when desired.

The front face of cabinet wall 32 or the escutcheon plate 62 is preferably marked with suitable indicia which designate the three vertical positions in which the channel selector switch block assembly 11 may be placed to perform its various functions. For instance, the top position "A" is indicated by a horizontal line, the letters "P.S." and the word "ON," which signifies that the automatic program selector is in operating position. The intermediate position "B" is indicated by a line and the word "OFF" and the abbreviation "REM," which signifies that power to the system is off and that the programming device may be removed for resetting. The lowest position "C" is indicated by a line, the letters "M.S." and the word "ON," which signifies that the switch block 11 is in position for manual operation of the system or that the manual program selector is "ON." The channel selector switch block assembly 11 may be readily raised or lowered to any one of these three positions and may temporarily be retained in the selected position by suitable spring pressure detents 64 which are arranged and secured to the inside face of the cabinet wall 32, where they are adapted to contact an aperture or depression 65 in the front extension 54 of the operating bar 53, as especially shown in FIGS. 1 and 1*a*.

The switch lever arms 66 and 66' are adapted to be contacted by pressure pins 34 in the off area or ring 47 of the drum portion 22. These arms are somewhat different from the switch lever arms 48 and 48' in that the upper arm 66 is preferably rigid and projects a short distance from the nonconductive switch block 49. The lower lever arm 66' is flexible and longer than arm 66, having a raised cam position 67 to which pressure may be applied by one of the pins 34 to open the contact points 68, as shown in FIGS. 2, 4 and 7.

Having thus described the principle components and supporting apparatus of the rotatable programming device 8 in the preceding paragraphs, I refer now especially to FIGS. 2 and 7 for a detailed description of the alarm or call signal device 17 which is adapted to operate in conjunction with the programming device.

The alarm or call device 17 comprises a bell, buzzer, or other suitable signalling apparatus having one of its terminals electrically connected through a conductor 69 to switch block 13 and thence to the main circuit conductor 70. The other terminal of device 17 is connected directly to the other main circuit conductor 71. The call signal switch block 13 is comprised of a nonconductive plastic switch block 72 having upper and lower conductive switch lever arms 73 and 73', respectively, which are securely attached to the plastic switch block 72 and project toward the center line 50' of the drum portion 22 and drum 12. The upper lever arm 73 is preferably rigid and the lower lever arm 73' preferably is flexible and normally tends to spring upwardly to close the pair of contact points 74 mounted thereon when not subjected to pressure. When pressure is applied to the upwardly bent end portion 75 by any one of the pins 34 in the last ring area or segment of the drum portion 22 or by a stop pin 76, as shown in illustration in FIG. 7, the contact points 74 will be opened.

The call signal switch block assembly 13 is adapted to be moved into "OFF" and "ON" positions by manual horizontal sliding movement of a control lever 77 which is attached to the switch block assembly 13. Control lever 77 projects forward through an elongated slot in the cabinet wall and a mating horizontal slot 78 in the escutcheon plate 79 which is attached to the outer face of the cabinet wall 32, as shown in FIG. 3. Plate 79 is provided with suitable indicia indicating "OFF" and "ON" positions.

When in the "ON" position the call signal switch block assembly 13 is placed in position 13*a*, shown in FIG. 7, so that the upwardly bent end portion 75 can contact either the periphery of drum portion 22 or one of the off pins 34. When in the "OFF" position the switch block assembly 13 must be placed in position 13*b*. It should be noted that the switch block assembly 13 must never be moved to the "ON" position 13a until the channel selector switch block assembly 11 has been lowered to its intermediate "B" or "OFF" position to prevent damage to either switch lever arm, as both

switches could not occupy the same space at the same time without damage.

Further features and usage of the time controlled automatic programming device of this invention will be evident from the following paragraphs which describe the operation and function of the device.

Operation

To remove programming drum **10** from its rotatable position in the television chassis and from the cabinet or enclosure of the receiver, it is first necessary to place the channel selector switch block assembly **11** in the "OFF" and "REMOVE" position "B" indicated in FIGS. 1 and 1*a*. This procedure lowers the switch block and its attached upward projecting arm **60** from the circumferential slot **21** in collar **20** of drum **10,** thereby eliminating any possible interference with its removal from the cabinet structure.

Then, by gripping the exposed handle portion **19,** the entire assembly including the plurality of stored pressure pins **34** may be quickly and easily pulled out from the cabinet through the opening in its front wall **32.** Removal of programming drum **10** allows a spring biased cam member **80** to slide forward on the surface of the bracket **81,** which is attached to the front channel member **56** to prevent accidental raising of the upward projecting arm **60** during removal or reentry of the device.

After the programming drum **10** has been removed from the cabinet, the simple procedure of setting up or scheduling the 24 hour television program is readily accomplished in the following manner. The contact pressure pins **34,** which are usually in the last colored ring or off area **47** of the drum portion **22** are slid forward in their respective longitudinal time slots **33** the distance necessary to place each pin in the desired colored ring area **38.** These ring areas represent the several television channels which may be included in the scheduled program. This can be easily done by referring to the hour and half hour markings and indicia located adjacent each slot on the periphery of drum portion **22.** The pins **34** which are not utilized in setting up the time scheduled program are allowed to remain in the off area **47.**

Having set up the scheduled 24 hour television program, the programming drum **10** is then returned to its normal position in the chassis as shown in FIG. **1.** This is readily accomplished by holding the device in a horizontal position and inserting it through the circular opening in wall **32** of the enclosure, and pushing it rearwardly until the keyhole-shaped rear end portion **24** of the drum portion **22** contacts the identical shaped recess **25** in the ratchet wheel **16.** Drum **10** is then rotated counter-clockwise until the end portion **24** is in alignment with the mating shaped recess **25,** at which time it is pushed into recess **25** past a suitable spring detent **16a** which is mounted in the key-shaped recess in the ratchet wheel **16** to prevent excessive horizontal movement of the device.

It should be noted that guard member **31** is permanently installed as shown in FIGS. **1** and **2** to substantially surround drum portion **22,** except for a longitudinal opening **31'** in its bottom central area and a cut out **31''** in its rear supporting end which surrounds its rear reduced end portion. The purpose of this guard member is to prevent damage to any of the drum mechanisms by accidental lowering of the drum portion **22** while being removed from or inserted in its operative position.

After the above described procedure has been accomplished, it only remains necessary to raise and place the channel selector switch block **11** in its uppermost position "A" to cause the time controlled automatic programming device to deliver the scheduled television programs over a 24 hour period.

It should be noted that power cord and plug **82** remain plugged into a **110** volt A.C. source at all times to keep the time control clock **14** running constantly and to supply electrical current to the other elements of the circuit when they are to be activated upon switch block **11** being raised to position "A" or lowered to position "C." When switch block assembly **11** is in position "A" one of the preset contact pressure pins **34** placed in the colored channel selection areas or rings **38** in a specific time slot **33** will contact and apply pressure to one of the upper switch lever arms **48** (as shown in FIGS. **2** and **7**), thereby closing the contact points **52** and activating that particular channel by allowing current to flow through the leads **70** and **71** to the tuning device **83** and other necessary components of the system (not shown). The contact pressure pin **34** will continue to apply pressure and hold the selected channel in activated "ON" relation for a full half hour period because the programming device is not revolving during this time. At the end of the half hour period, the programming drum **10** is automatically rotated one forty-eighths of a revolution to engage another pin in the next time slot **33** to continue the scheduled program for another half hour period or to change the program by engaging another pin **34,** prepositioned to activate another channel by applying pressure to its respective switch lever arm **48.**

Should there be an unscheduled period or portion of the program when there are no pins in position to contact the several upper switch arms **48,** the rotational activity of the drum would affect only the last ring segment and the last element lever arms **66** and **6'**. This action causes the pins **34** to exert pressure on the lower switch lever arm **66'** and open the contact points **68** to automatically shut the channel selecting circuit of the system "OFF." When in manual or "OFF" position (B or C, FIG. 1a) the call signal switch block assembly **13** may be placed in position **13a** where it may be activated as previously described.

Although but one embodiment of the invention has been shown and described, it will be apparent to those skilled in the art that various changes and modifications may be made therein without departing from the spirit of the invention or from the scope of the appended claims.

What is claimed is:

1. A program selector for channel type receivers comprising:

a rotatable drum having a plurality of slots extending longitudinally thereof,

each of said slots being parallelly arranged with the others of said slots,

said slots being radially spaced around said drum at predetermined positions corresponding to time coordinates in the direction of drum travel,

the length of said drum being divided into marked areas each representative of a channel of said receiver,

said areas on said drum being arranged on said drum in a direction perpendicular to said time coordinates,

a plurality of pins, one slidably mounted in each of said slots,

means for positioning each of said pins at predetermined positions along its respective slot in one of said areas,

a plurality of conductive contact fingers, one for each channel of the receiver mounted for engaging a pin positioned on said drum in one of said slots and in one of said areas representative of said channel,

said plurality of fingers comprising pairs of conductive fingers, each pair being closed by engagement with one of said pins,

said plurality of conductive contact fingers being spacedly mounted on an insulating bar which is slidably mounted for movement laterally to and from said drum to position said fingers in the path of movement of said pins in said slots,

and a clock driven means for rotating said drum,

said fingers when engaged by pins positioned in a predetermined manner in said slots selecting a particular channel of the receiver at a precise time.

2. The program selector set forth in claim **1** in further combination with:

means for selectively moving said conductive contact fingers into and out of positions for engagement with said pins in said slots of said drum.

3. The program selector set forth in claim **1** wherein said slots are radially spaced around said drum at increments of seven and one half degrees to represent 48 time coordinates.

4. The program selector set forth in claim **1** wherein:

said pins each comprise a hollow housing slidably mounted in different ones of said slots,

each housing being provided with an aperture opening inwardly of the slot within which it is mounted, and

a ball mounted in each housing and spring biased to extend into said opening to provide a means for sliding said housing along said slot and positioning said pins at predetermined positions in said slots.

5. The program selector set forth in claim **1** wherein the areas at one end of said slots identify an alarm area, and an alarm connected to the contact finger positioned to be actuated by lack of a pin in said alarm area for actuating said alarm.

* * * * *