(12) INTERNATIONAL APPLICATION PUBLISHED UNDER THE PATENT COOPERATION TREATY (PCT)

(19) World Intellectual Property Organization
International Bureau

(43) International Publication Date
8 April 2004 (08.04.2004)

PCT

(10) International Publication Number
WO 2004/028755 A1

(51) International Patent Classification^7: **B25J 7/00**, 11/00, B23B 39/14, 49/00

(21) International Application Number: PCT/AU2003/001241

(22) International Filing Date: 22 September 2003 (22.09.2003)

(25) Filing Language: English

(26) Publication Language: English

(30) Priority Data:
2002951643 25 September 2002 (25.09.2002) AU

(71) Applicant *(for all designated States except US)*: **CRC FOR INTELLIGENT MANUFACTURING SYSTEMS & TECHNOLOGIES LTD** [AU/AU]; Corner Albert & Raglan Streets, Preston, Victoria 3072 (AU).

(72) Inventors; and

(75) Inventors/Applicants *(for US only)*: **GOWER, Stephen, Allan** [AU/AU]; C/o- School of Electrical, Computer, and Telecommunications Engineering, University of Wollongong, Northfields Avenue, Wollongong, New South Wales 2522 (AU). **VAN DUIN, Stephen** [AU/AU]; C/o- School of Electrical, Computer, and Telecommunications Engineering, University of Wollongong, Northfields Avenue, Wollongong, New South Wales 2522 (AU).

(74) Agent: GRIFFITH HACK; GPO Box 1285K, Level 3, 509 St Kilda Road, Melbourne, Victoria 3001 (AU).

(81) Designated States *(national)*: AE, AG, AL, AM, AT, AU, AZ, BA, BB, BG, BR, BY, BZ, CA, CH, CN, CO, CR, CU, CZ, DE, DK, DM, DZ, EC, EE, EG, ES, FI, GB, GD, GE, GH, GM, HR, HU, ID, IL, IN, IS, JP, KE, KG, KP, KR, KZ, LC, LK, LR, LS, LT, LU, LV, MA, MD, MG, MK, MN, MW, MX, MZ, NI, NO, NZ, OM, PG, PH, PL, PT, RO, RU, SC, SD, SE, SG, SK, SL, SY, TJ, TM, TN, TR, TT, TZ, UA, UG, US, UZ, VC, VN, YU, ZA, ZM, ZW.

(84) Designated States *(regional)*: ARIPO patent (GH, GM, KE, LS, MW, MZ, SD, SL, SZ, TZ, UG, ZM, ZW), Eurasian patent (AM, AZ, BY, KG, KZ, MD, RU, TJ, TM), European patent (AT, BE, BG, CH, CY, CZ, DE, DK, EE, ES, FI, FR, GB, GR, HU, IE, IT, LU, MC, NL, PT, RO, SE, SI, SK, TR), OAPI patent (BF, BJ, CF, CG, CI, CM, GA, GN, GQ, GW, ML, MR, NE, SN, TD, TG).

[Continued on next page]

(54) Title: END EFFECTOR

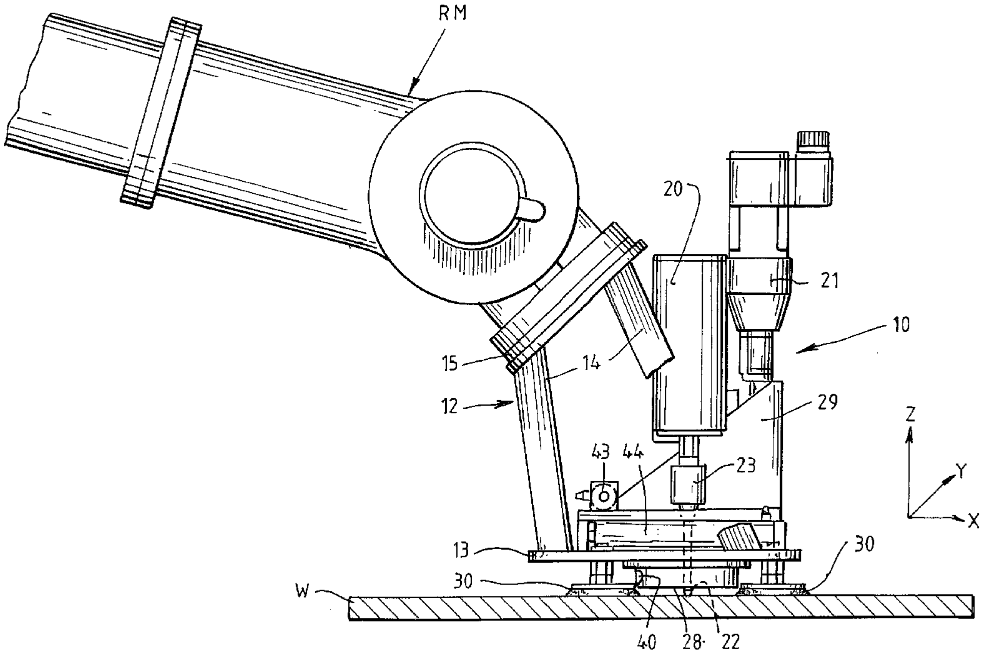

(57) Abstract: An end effector for attachment to a robotic manipulator, the end effector comprising a frame adapted to support means to drive a tool and means to displace the tool in X, Y, and Z planes, the end effector being adapted to be used with a tracking system that provides a signal indicative of the error between the correct tool position and the actual tool position, and means to compute the error to cause the displacement means to displace the tool to the correct position in the X and Y planes.

WO 2004/028755 A1

Published:

— *with international search report*

TITLE

END EFFECTOR

FIELD OF THE INVENTION

This invention relates to an end effector for use in the robotic industry, more particularly the invention relates to an end effector for use with robotic drilling.

BACKGROUND OF THE INVENTION

There are many industries in which robotics can be used to improve productivity, consistency of production and profitability. One such industry is the aerospace industry.

The process of assembling parts of the wings of aircraft is time consuming, costly and involves the use of large dedicated assembly jigs. Automating the manufacture of these parts, using robots, not only increases production but also increases flexibility of the process if dedicated jigs can be replaced. Drilling, reaming, countersinking, deburring, fastener insertion and sealant application are a few of the tasks where robots can be utilised. Drilling, however, is the most critical where an accuracy in the order of a 100 μm between drilled holes is typically necessary. Some aerospace assemblies require tens of thousands of drilled holes over several metres to this high level of accuracy. With a combination of drilling reaction forces and the inherent flexibility within robot joints, the accuracy required is often not achievable using a standard robot alone.

In robotic drilling the forces generated when drilling a 5mm diameter hole in carbon composite can be as high as 200 N normal to the surface and 60 N in either the

X and Y planes perpendicular to the drill bit. These forces are significant enough to generate deflections and vibrations in a manipulator that are detrimental to the quality and accuracy of the drilled hole. Published papers in this art shown that the key parameters for robotic drilling are the drill rotational speed and thrust force.

Previous research in robotic drilling has used the robotic manipulator to provide the linear drill feeding whereby a conventional drill, coupled to a force sensor, is attached to the last link. This work utilises force feedback to regulate the thrust force generated by both variable spindle speed and linear feed. Force feedback aims to minimise any reaction forces the manipulator has to provide, but highlights the problem that arises from hard-on-hard contact as the drill tip contacts the work surface. Thus, through quantisation, a loss of information from the collocated joint encoders affects the kinematic placement of the tool tip resulting in a subsequent loss of accuracy. This problem is exacerbated by low manipulator stiffness, joint wear, tool wear and can be problematic even at relatively low drilling forces. Some systems, previously developed for robotic drilling, have "clamped" the drill to the right position and angle before the start of drilling. By doing this, the overall stiffness of the manipulator is improved during drilling but the static positioning of the drill tip after clamping is compromised and made dependent on the manipulators positional accuracy. The drill tip thus requires a further micro-positioning movement after clamping, to remove the positional error.

Table 1 below indicates the typical accuracy requirements for aerospace drilling and those achieved by manual and automated means. It can be seen that an articulated robot alone is not sufficient to provide the level of desired repeatability, even in an unloaded capacity. The manufacturers specified accuracy of a robot is not included and is generally determined by a number of factors specific to the application that it is used.

Positional Accuracy	Imperial	Metric
Conventional manual drilling with jigs and fixtures	0.008″	0.200mm
Worlds best practice	0.005″	0.125mm
Manufacturers specifications of a 6 DOF articulated robot repeatability (unloaded)	>0.004″	>0.100mm
Desirable accuracy	<0.003″	<0.075mm

Table 1. - Typical drilling and positional accuracy.

A second approach is to acquire less accurate robots, but rely on a high accuracy metrology system that could help compensate for robot inaccuracies. This method measures all three position and three orientation components without physical contact with the robot. The manipulator is then continually calibrated in real time significantly improving the accuracy of the robot. Accuracy of two thousands of an inch (0.05mm) have been reported using a drilling end effector coupled with a laser subsystem.

It is these issues that have brought about the present invention.

SUMMARY OF THE INVENTION

According to a first aspect of the present invention there is provided an end effector for attachment to a robotic manipulator, the end effector comprising a frame adapted to support means to drive a tool and means to displace the tool in X, Y, and Z planes, the end effector being adapted to be used with a tracking system that provides a signal indicative of the error between the correct tool position and the actual tool position, and means to compute the error to cause the displacement means to displace the tool to the correct position in the X and Y planes.

According to a further aspect of the present invention there is provided an end effector for attachment to a robotic manipulator, the end effector comprising a frame adapted to support means to drive a tool and means to displace the tool in X, Y, and Z planes, the end effector being adapted to be used with a tracking system that provides a signal indicative of correct tool position, the end effector including position sensitive detectors to sense the variation of the actual tool position from the correct tool position, and means to compute the variation to cause the displacement means to displace the tool to the correct position in the X and Y planes.

According to a further aspect of the present invention there is provided a method of carrying out a machining step using a robotic manipulator that terminates in an end effector, the method comprising:

a.) macro positioning the tool through movement of the robotic manipulator,

b.) using a tracking system to provide a signal indicative of the correct tool position,

c.) computing the error between the correct tool position and actual tool position,

d.) passing a signal representing the error to displacement means, and

micro positioning the tool to the correct position in the X and Y planes.

DESCRIPTION OF THE DRAWINGS

An embodiment of the present invention will now be described by way of example only in which:

Figure 1 is a side elevational view of an end effector attached to a robot manipulator,

Figure 2 is a front view of the end effector,

Figure 3 is a plan view of the end effector,

Figure 4 is a bottom view of the end effector,

Figure 5 is a left hand side elevational view of the end effector,

Figure 6, is a schematic cross sectional view of a position sensitive detector, and

Figure 7 is a block diagram of a control strategy.

DESCRIPTION OF THE PREFERRED EMBODIMENT

The accompanying drawings illustrate an end effector 10 for use in robotic drilling. The end effector is bolted to the end of a robotic manipulator RM that forms part of a six axis robot (not shown). As shown in Figure 1, the robotic manipulator RM positions the end effector in a desired position over a work piece W. The end effector 10 essentially comprises a frame structure 12 that defines a base 13 with upstanding legs 14 supporting a robot adapter plate 15. The robot adapter plate 15 has an array of apertures 17 positioned around a central aperture 16 to enable the plate to be bolted to the end of the robotic manipulator RM as shown in Figure 1. The frame 12 supports a drill spindle 20 that is coupled to a drill feed 21 to drive the drill tip 22 that is secured to the drill spindle about a chuck 23.

As shown with particular reference to Figures 2 and 4, the underside of the base plate 13 of the frame 12 supports four vacuum generated suction cups 30 that are bolted to the base plate as shown in Figure 2.

The end effector 10 essentially combines a clamping mechanism, laser metrology system and a micro positioning drill head to compensate for robot inaccuracy. The end effector 10 relies on the robot manipulator RM to macro position the tool tip 22 to the inherent accuracy of the robot. After clamping, any measured offset is corrected by repositioning the drilling head independent to the manipulator by a micro-positioning stage.

The end effector frame 12 including the base plate 13 and adapter plate 15 are constructed from aluminium to reduce the overall weight of the mechanism.

To enable seamless control of the drill rotational speed and spindle feed rate, two independent Baldor® AC servodrives with quadrature control are used. AC servodrives offer the controllability necessary to minimise the drilling forces generated from the drill tip. The drill spindle 22 has a rotational speed capacity of that similar to conventional air drills used in a manual drilling process. The spindle motor 20 is attached via a table to a miniature ballscrew and linear bearing assembly, as illustrated in Figure 2, to allow linear translation of the spindle motor in the vertical deviation.

Four 75mm diameter suction pads 30 are attached to the base plate 15 of the end effector to increase the static stiffness of the robotic manipulator RM during the drilling cycle. The suction pads 30 are arranged in a pattern that ensures that at least three pads remain in contact with the workpiece surface for each hole drilled.

The suction pads are coupled to a vacuum pump, not shown, and various tests were undertaken to ensure that the suction force was sufficient to withstand the drilling forces and to ensure that the suction did not introduce further undesirable deflections in the robotic manipulator. A mechanical hard stop 28 was positioned adjacent the base of the end effector 10 to guarantee orthogonal drilling while providing a stiff coupling interface between both the work piece and end effector.

The large scale manipulator, to which the end effector is attached, macro-positions the work tool to a nominal positional accuracy anywhere in the large scale work area and, using the suction pads, vacuum attaches itself to the work piece for rigidity. Two solid state lasers located independently are projected to the end effector in both the X and Y planes respectively. The lasers are either statically mounted around the perimeter of the work area or dynamically moved to pre set locations by linear translation. The lasers fall upon two Position Sensitive Detectors 40, 41 (PSD's) mounted on the end effector, near the drill tip, in the respective planes. As shown in Figure 6, the surface of each detector on which incident laser light falls is dissected and the position of the incident laser falling on the PSD creates two currents directly proportional to the linear offset from its median. Using a simple mathematics function, the current is converted to an error voltage and amplified to represent a positional error of the tool tip with respect to the laser alignment within ± 5 μm.

This error is then used by a micro-positioning stage to improve the accuracy of the tool tip position in both the X and Y planes respectively. By securing the 'hard stop' 28 against the workpiece W, the end effector 10 becomes positional to a high level of accuracy in all three axes (x,y,z). This relatively inexpensive metrology device can in specific circumstances exceed the capability of more expensive laser tracking devices using interferometry techniques.

The drill spindle 22 is mounted on an X-Y linear stage table 29 using four linear bearings attached to the baseplate of the end effector. Two closed loop piezoelectric linear actuators 43, 44 link the stage and allow linear movement in each respective two-dimensional plane of the drill tip. Each actuator has a stroke of 180 μm with an incremental resolution 1.8 nm and an unloaded resonant frequency of 2 kHz (± 20%). This relatively large bandwidth gives the micro-position stage the capability of a fast reactive response to high frequency vibrational forces. Push/pull force of the actuators is 4500/500 N respectively. Particular attention has been given to the available magnitude of actuator driving force in order to provide sufficient reaction force to the drill tip disturbances and accommodate for any inertial forces generated from high speed manipulator motion. A dedicated high voltage amplifier drives each piezoelectric actuator by using the amplified 0-10 volt error signal generated by the PSD's. Figure 7 illustrates the block diagram of the actuator position control strategy.

By applying a classical proportional integral derivative controller to the error signal and using a suitable time constant, positional errors less than ± 90 μm can be corrected before or during the drilling stage. Figure 6 illustrates the simple control architecture used for each axis. Theoretically, the frequency response of the actuators should attenuate vibrations and positional disturbances caused by drilling up to 2 kHz.

The end effector described above is capable of achieving a level of accuracy that has a tolerance of an order of magnitude better than a conventional robot manipulator over large work areas.

The metrology measurement device employed is a simple and inexpensive alternative to some other researched laser tracking systems of substantially higher cost (2 orders of magnitude more expensive). By coupling this with high accuracy piezoelectric actuators, positional errors can be controlled and holes of the desired accuracy can be drilled. By designing compliance into the end effector, less emphasis is placed on the need for high accuracy manipulators creating a flexible environment whereby less expensive, dated or worn robots could be employed. More importantly, by creating a drilling head capable of machining holes with accuracy greater than that specified by aerospace manufacturers, expensive and cumbersome jigs and fixtures could possibly be made obsolete.

Although the preferred embodiment uses a laser tracking system and position sensitive detectors on the end effector it is possible to use other tracking systems that provide an error signal between the correct tool position and the actual tool position. The error is then transmitted to the end effector which computes the error to displace the tool to the correct position. In this embodiment there is no need for position sensitive detectors in the end effector and the error signal is computed by the tracking system. In systems of this kind a transceiver or reflector is positioned on the end effector to reflect the signal back from the tracking system to allow computation of the error.

It is understood that the end effector described above is not restricted to drilling and can be adapted to conduct other operations such as countersinking and riveting reaming or fastener location insertion reaming.

It is further understood that the invention is not restricted to the use of lasers. The end effector can be designed to interpret any signal that positively dictates the position of the work piece or tool. A variety of drives can also be utilised to correct the error.

THE CLAIMS:

1. An end effector for attachment to a robotic manipulator, the end effector comprising a frame adapted to support means to drive a tool and means to displace the tool in X, Y, and Z planes, the end effector being adapted to be used with a tracking system that provides a signal indicative of the error between the correct tool position and the actual tool position, and means to compute the error to cause the displacement means to displace the tool to the correct position in the X and Y planes.

2. The end effector according to claim 1 wherein a hard stop positions the end effector in the Z plane.

3. The end effector according to either claim 1 or claim 2, including means to clamp the end effector to a support structure.

4. The end effector according to claim 3 wherein the means to clamp the end effector comprises a plurality of suction pads adapted to contact the support structure.

5. The end effector according to any one of the preceding claims wherein it is designed for use with a tracking system that compares the actual tool position with the correct tool position to calculate the error that is fed to the end effector.

6. The end effector according to any one of the preceding claims wherein the tool is a machine bit.

7. The end effector according to claim 6 wherein an electric or pneumatic motor drives a drill, the electric or pneumatic motor being mounted on a displaceable table that is displaceable in the Z plane by a drill feed motor.

8. An end effector for attachment to a robotic manipulator, the end effector comprising a frame adapted to support means to drive a tool and means to displace the tool in X, Y, and Z planes, the end effector being adapted to be used with a tracking system that provides a signal indicative of correct tool position, the end effector including position sensitive detectors to sense the variation of the actual tool position from the correct tool position, and means to compute the variation to cause the displacement means to displace the tool to the correct position in the X and Y planes.

9. The end effector according to claim 8 wherein the position sensitive detectors compute a signal that is sent to actuators that displace the tool to the correct position in the X and Y planes.

10. A method of carrying out a machining step using a robotic manipulator that terminates in an end effector, the method comprising:

a.) macro positioning the tool through movement of the robotic manipulator,
b.) using a tracking system to provide a signal indicative of the correct tool position,
c.) computing the error between the correct tool position and actual tool position,
d.) passing a signal representing the error to displacement means, and
e.) micro positioning the tool to the correct position in the X and Y planes.

11. The method according to claim 10 wherein the comparison between the actual tool position and correct tool position is made continuously throughout the machining process.

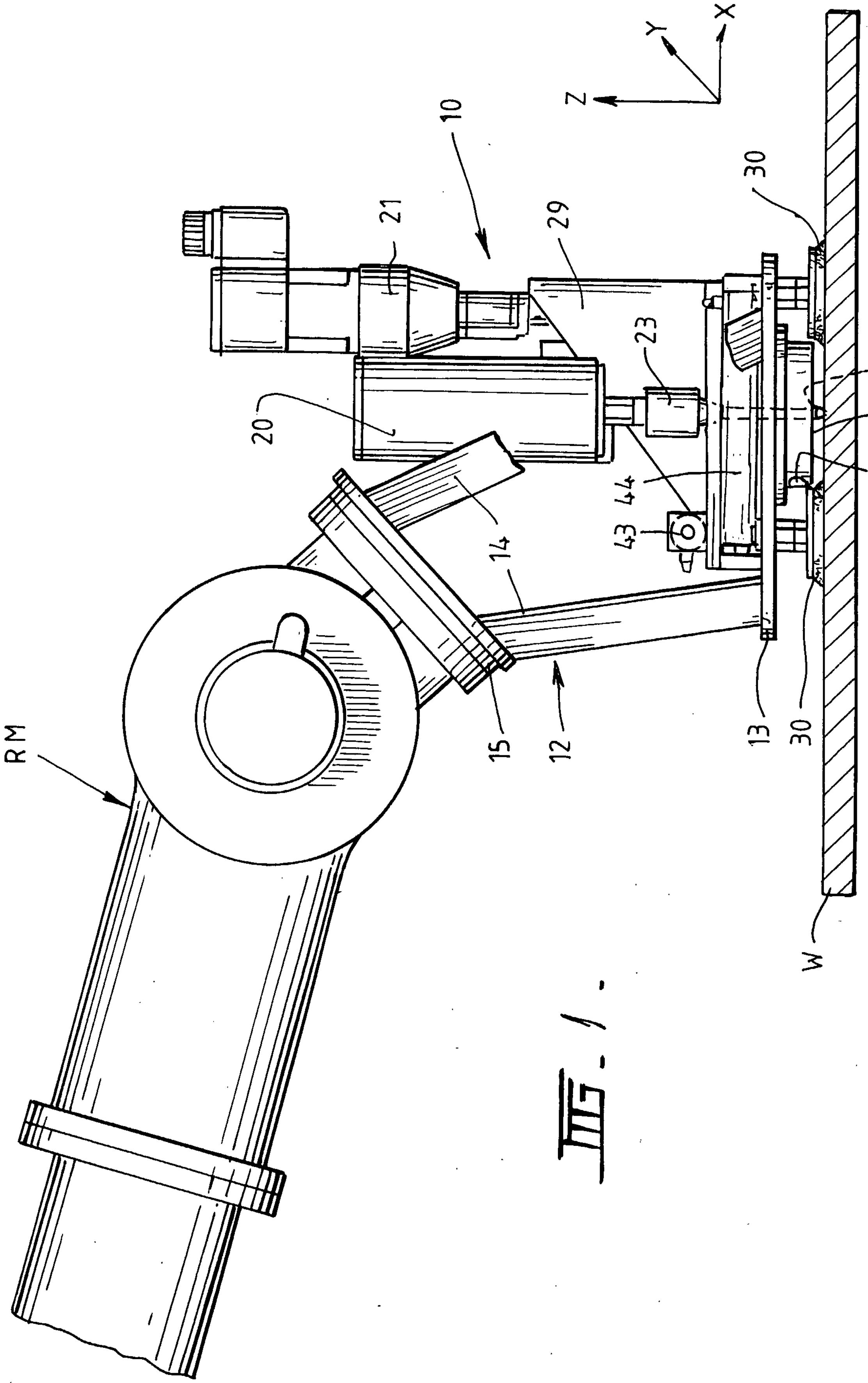

Fig. 1.

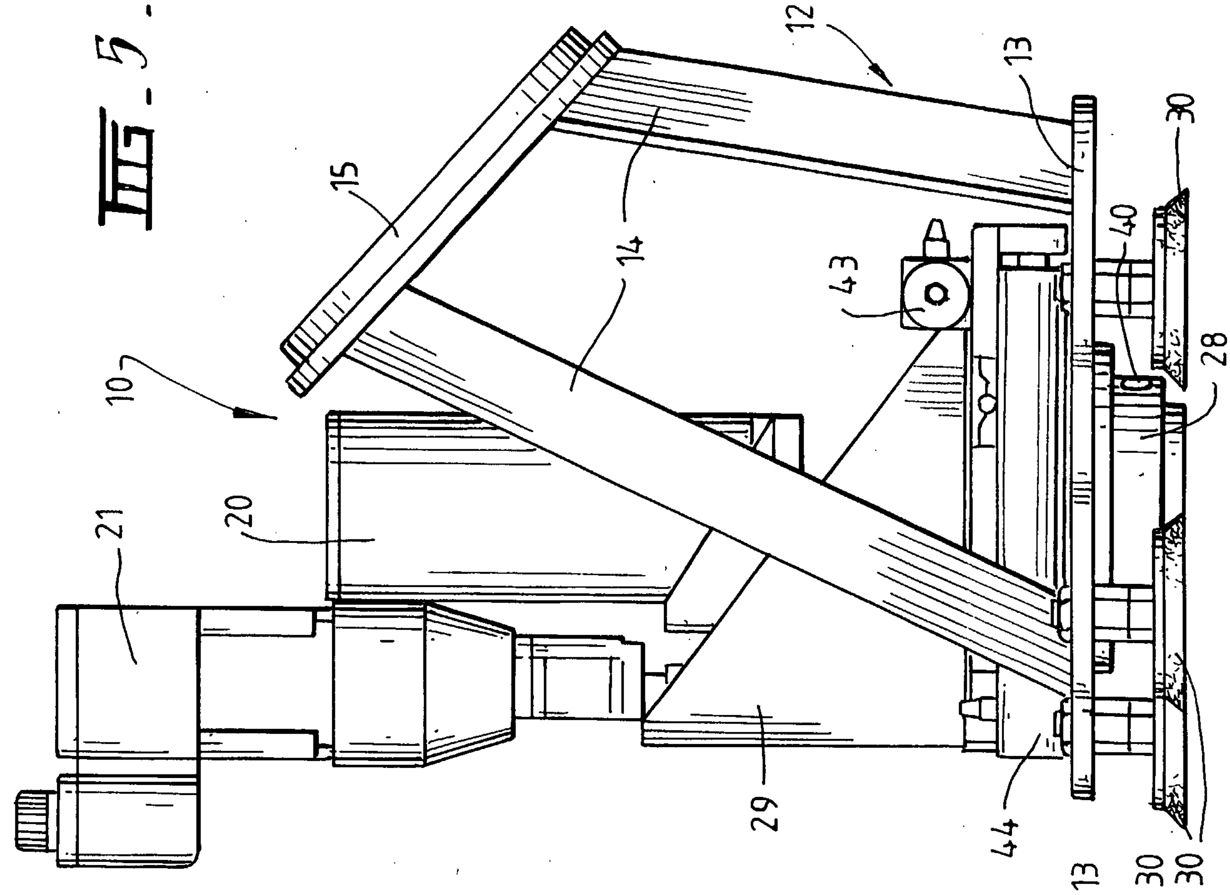

FIG. 5.

10
12
13
14
14
15
20
21
21
28
29
30
30
30
40
43
44

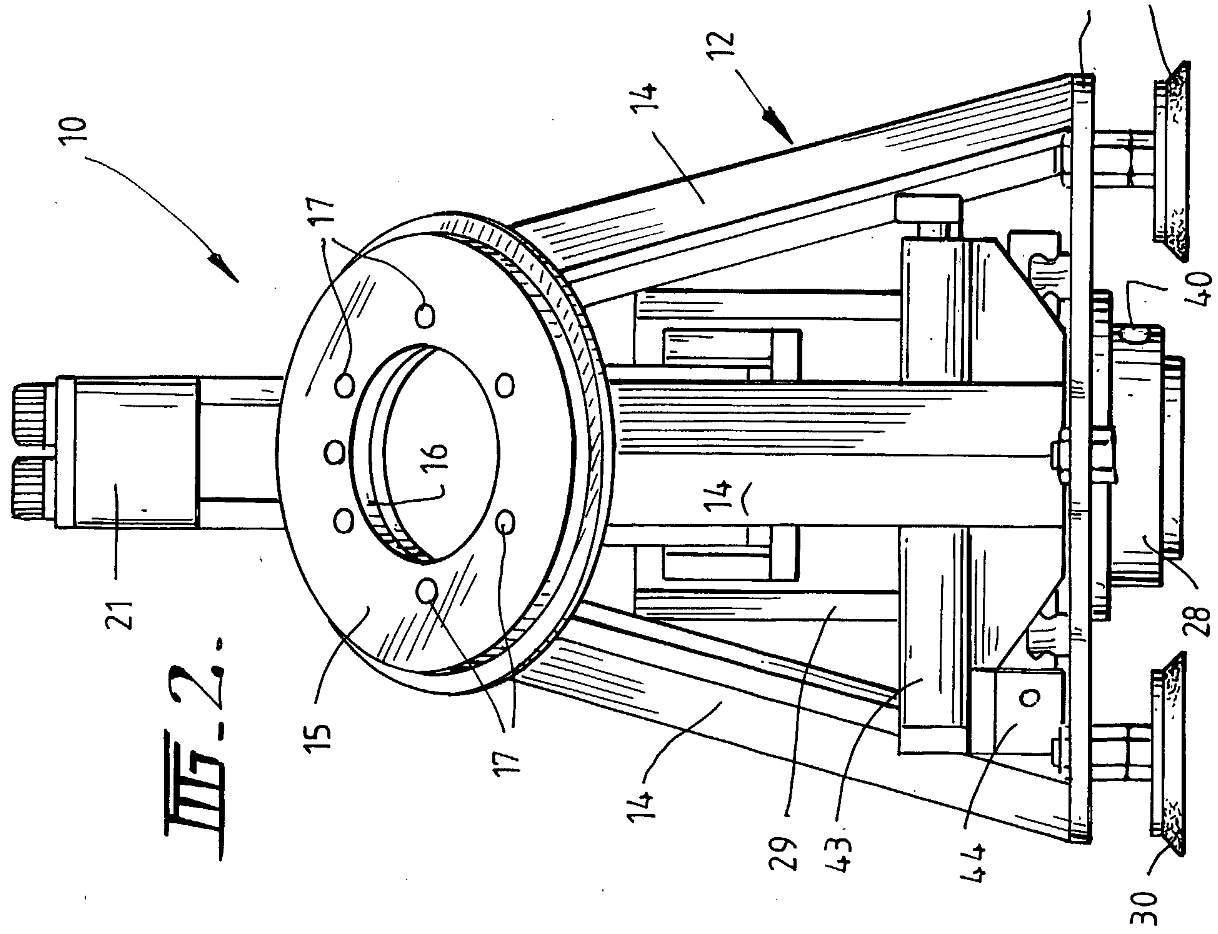

FIG. 2.

10
12
13
14
14
14
15
16
17
17
21
28
29
30
30
40
43
44

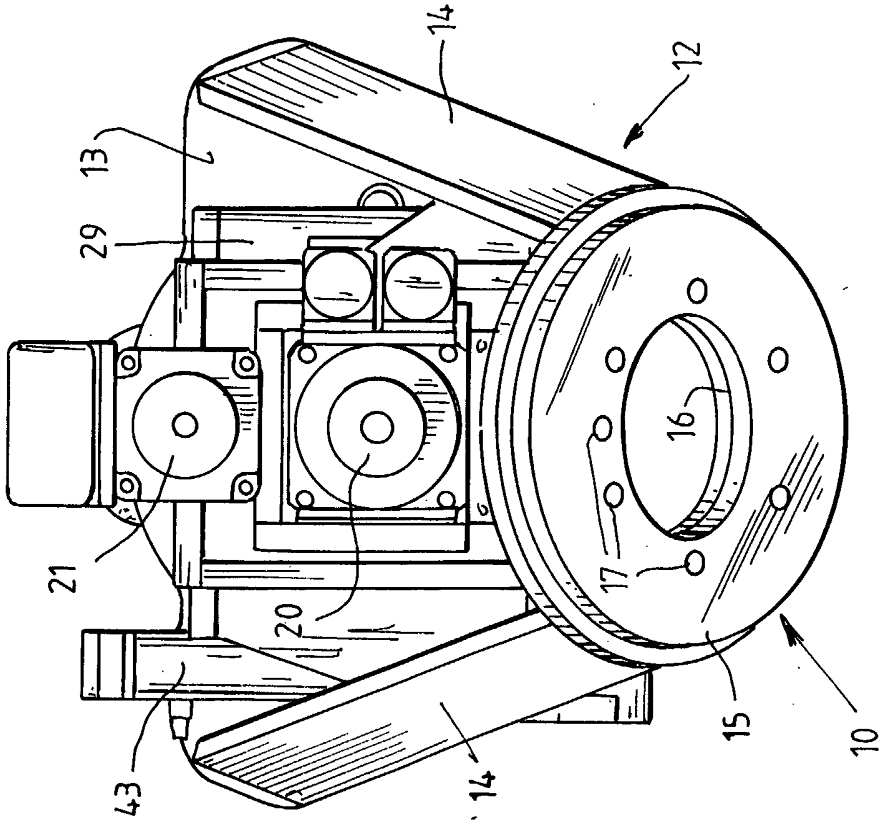

FIG. 3.

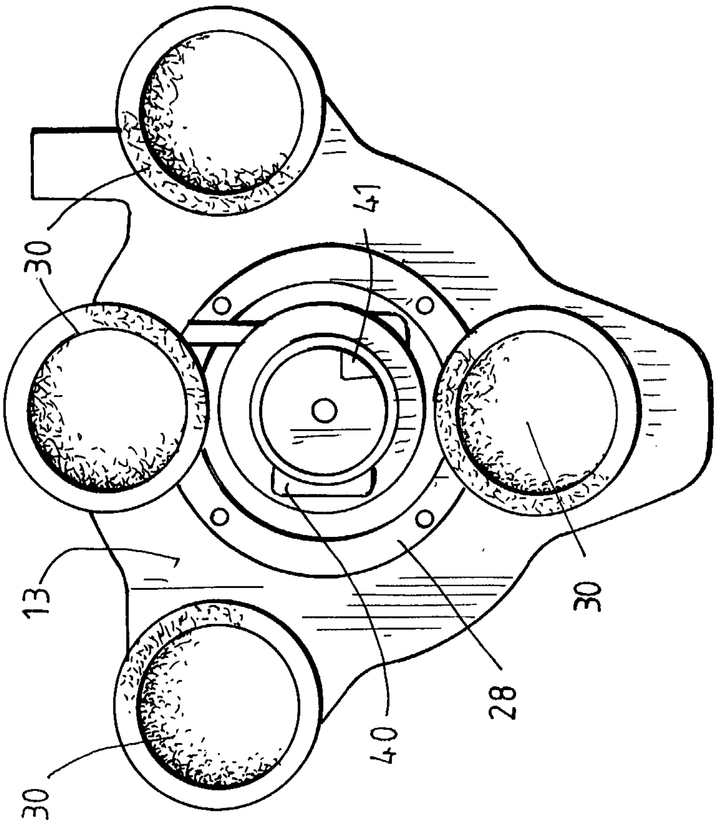

FIG. 4.

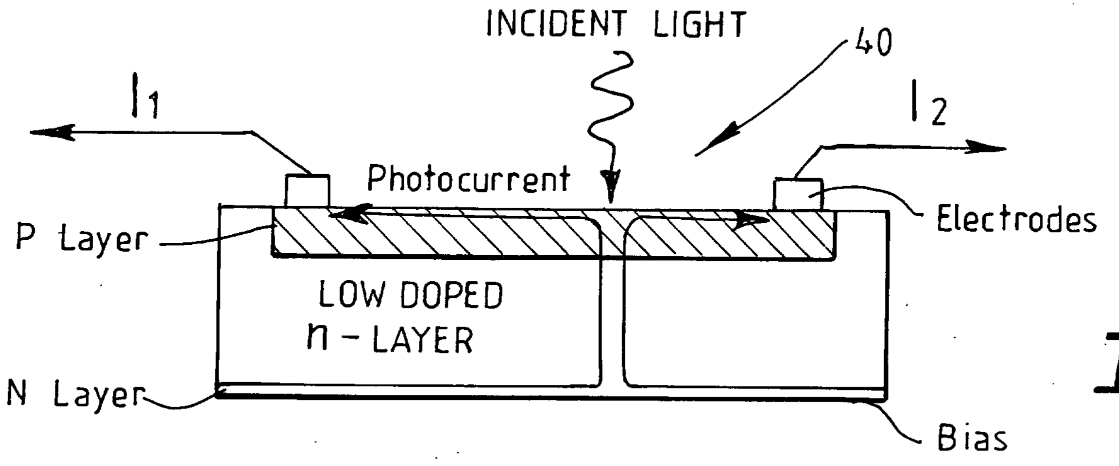
INCIDENT LIGHT
40
I_1
I_2
Photocurrent
Electrodes
P Layer
LOW DOPED
n - LAYER
N Layer
Bias

FIG. 6.

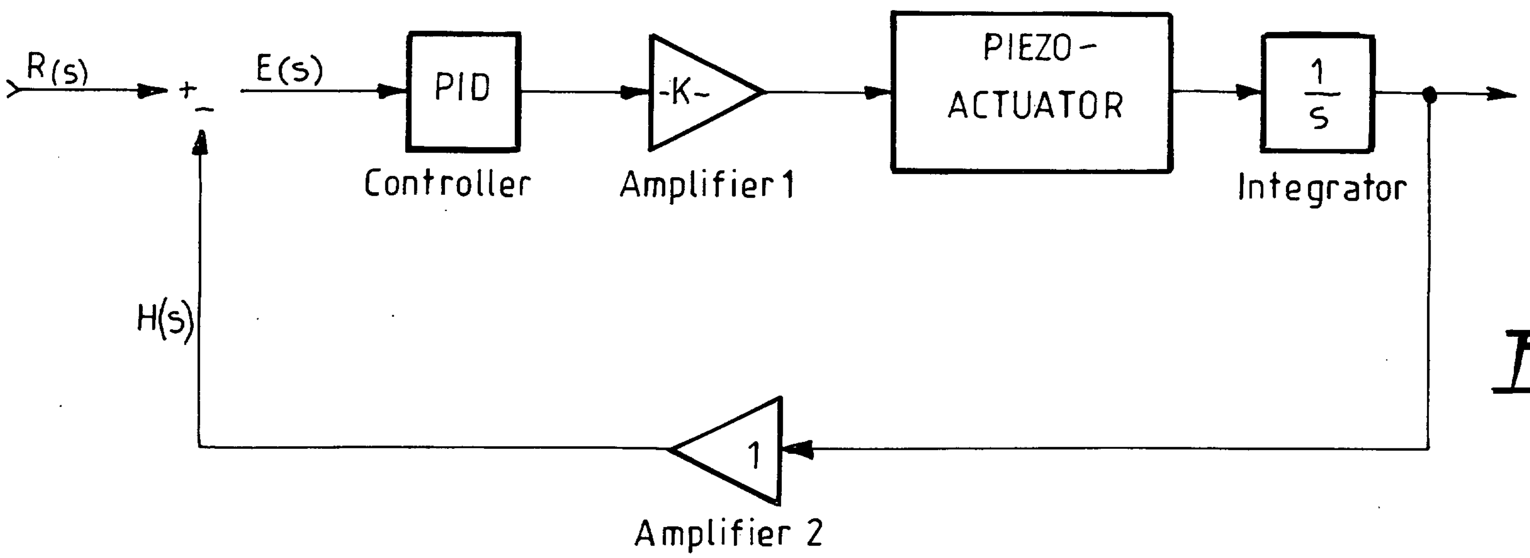
R(s)
+
−
E(s)
PID
Controller
-K-
Amplifier 1
PIEZO-
ACTUATOR
1/s
Integrator
H(s)
1
Amplifier 2

FIG. 7.

INTERNATIONAL SEARCH REPORT

International application No.
PCT/AU03/01241

A. CLASSIFICATION OF SUBJECT MATTER

Int. Cl. ^{7}: B25J 7/00, B25J 11/00, B23B 39/14, B23B 49/00

According to International Patent Classification (IPC) or to both national classification and IPC

B. FIELDS SEARCHED

Minimum documentation searched (classification system followed by classification symbols)
Refer Electronic Database consulted below

Documentation searched other than minimum documentation to the extent that such documents are included in the fields searched
AU: B25J-007/00, B25J-011/00, B23B-039/04, B23B-039/06, B23B-039/08, B23B-039/14, B23B-049/00

Electronic data base consulted during the international search (name of data base and, where practicable, search terms used)
Derwent World Patent Index: B25J-007/00, B25J-011/00, B23B-039/04, B23B-039/06, B23B-039/08, B23B-039/14, B23B-049/00 and keyword ROBOT+

C. DOCUMENTS CONSIDERED TO BE RELEVANT

Category*	Citation of document, with indication, where appropriate, of the relevant passages	Relevant to claim No.
X	US 6354168 B (SCHWAAR et al) 12 March 2002 See the whole document	1 – 11
X	US 6330837 B (CHARLES et al) 18 December 2001 See the whole document	1 – 11
X	US 5458443 A (BELGE et el) 17 October 1995 See the whole document	1 – 11
X	US 4884941 A (KAZEROONI) 5 December 1989 See the whole document	1 – 11

☐ Further documents are listed in the continuation of Box C ☒ See patent family annex

*	Special categories of cited documents:
"A"	document defining the general state of the art which is not considered to be of particular relevance
"E"	earlier application or patent but published on or after the international filing date
"L"	document which may throw doubts on priority claim(s) or which is cited to establish the publication date of another citation or other special reason (as specified)
"O"	document referring to an oral disclosure, use, exhibition or other means
"P"	document published prior to the international filing date but later than the priority date claimed
"T"	later document published after the international filing date or priority date and not in conflict with the application but cited to understand the principle or theory underlying the invention
"X"	document of particular relevance; the claimed invention cannot be considered novel or cannot be considered to involve an inventive step when the document is taken alone
"Y"	document of particular relevance; the claimed invention cannot be considered to involve an inventive step when the document is combined with one or more other such documents, such combination being obvious to a person skilled in the art
"&"	document member of the same patent family

Date of the actual completion of the international search 22 December 2003	Date of mailing of the international search report 6 JAN 2004
Name and mailing address of the ISA/AU AUSTRALIAN PATENT OFFICE PO BOX 200, WODEN ACT 2606, AUSTRALIA E-mail address: pct@ipaustralia.gov.au Facsimile No. (02) 6285 3929	Authorized officer **C. NGUYEN-KIM** Telephone No : (02) 6283 2121

INTERNATIONAL SEARCH REPORT

Information on patent family members

International application No.
PCT/AU03/01241

This Annex lists the known "A" publication level patent family members relating to the patent documents cited in the above-mentioned international search report. The Australian Patent Office is in no way liable for these particulars which are merely given for the purpose of information.

Patent Document Cited in Search Report		Patent Family Member					
US	6354168	EP	1068044	WO	0044526		
US	6330837	AU	90360/98	WO	9910137		
US	5458443	CA	2112417	DE	4244407	EP	0605765
		JP	6277919				
US	4884941	WO	8807438				

END OF ANNEX