May 2, 1950 K. A. WRIGHT 2,506,405

WALL SCRATCHER FOR WELLS

Filed Sept. 25, 1948 2 Sheets-Sheet 1

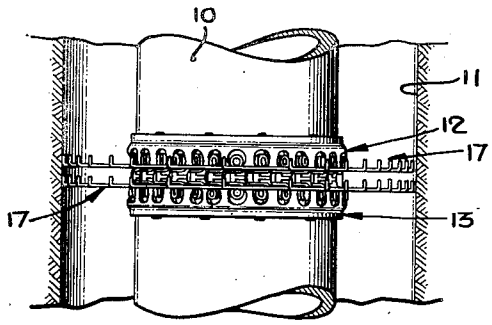

Fig. 1.

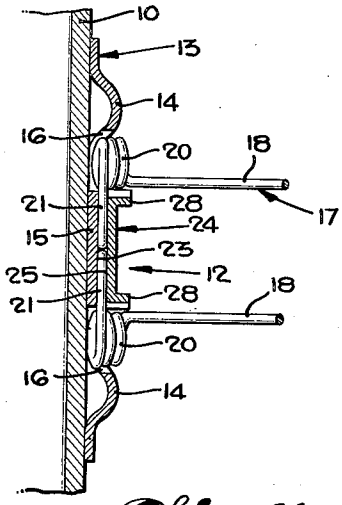

Fig. 3.

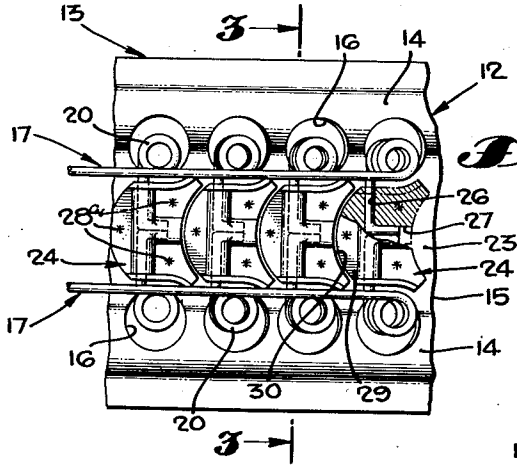

Fig. 2.

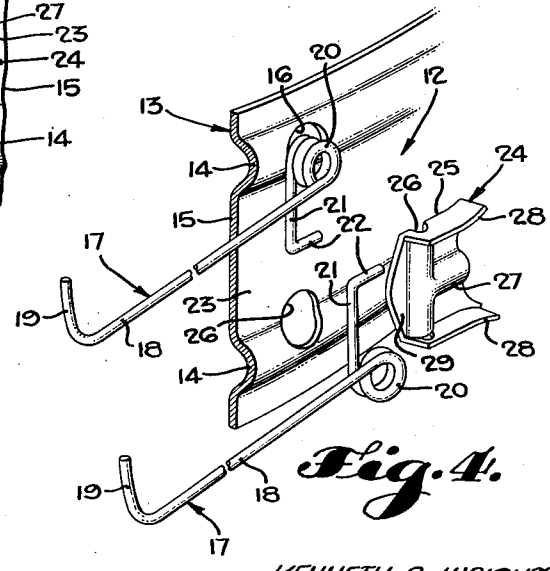

Fig. 4.

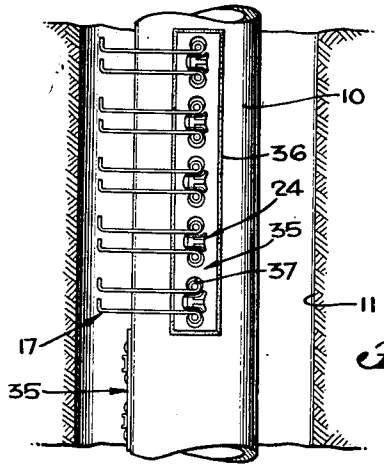

Fig. 5.

KENNETH A. WRIGHT,
INVENTOR.

BY Lyon & Lyon

ATTORNEYS

May 2, 1950 K. A. WRIGHT 2,506,405

WALL SCRATCHER FOR WELLS

Filed Sept. 25, 1948 2 Sheets-Sheet 2

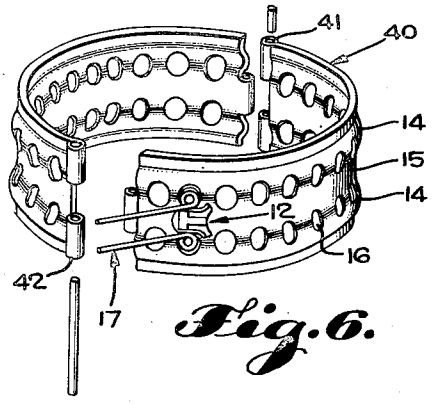

Fig. 6.

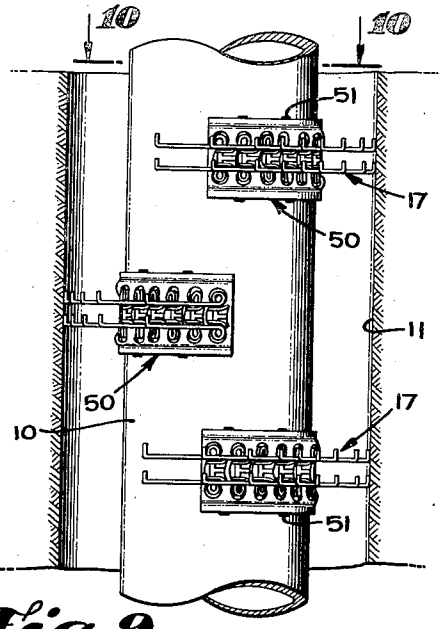

Fig. 9.

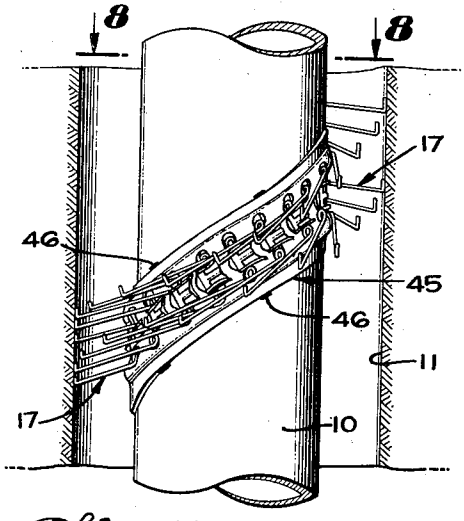

Fig. 7.

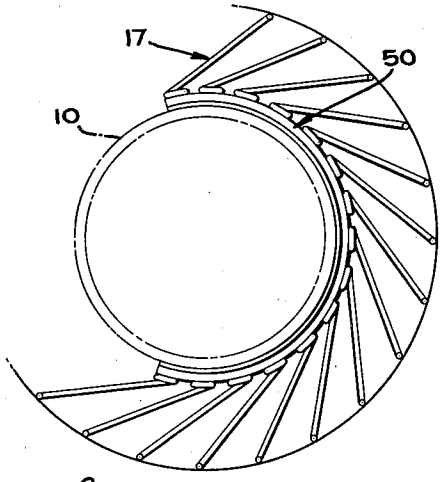

Fig. 10.

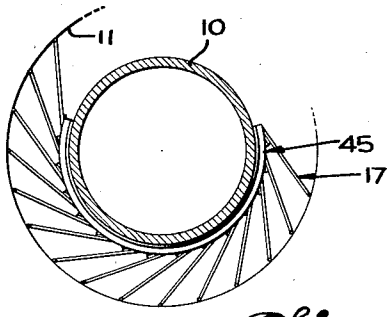

Fig. 8.

KENNETH A. WRIGHT,
INVENTOR.

BY Lyon & Lyon

ATTORNEYS

Patented May 2, 1950

2,506,405

UNITED STATES PATENT OFFICE

2,506,405

WALL SCRATCHER FOR WELLS

Kenneth A. Wright, Long Beach, Calif.

Application September 25, 1948, Serial No. 51,237

8 Claims. (Cl. 166—18)

1

This invention relates to well drilling and completion equipment and is particularly directed to apparatus insertable into the well bore to remove mud cake or sheath prior to and during cementing operations. A scratcher of the general type to which my invention pertains is shown in my prior Patent No. 2,374,317 issued April 24, 1945, and entitled "Well production equipment."

The principal object of this invention is to provide a novel form of wall scratcher for wells which is provided with spring fingers mounted in pairs on the outer surface of a carrier strip and secured in position thereon by novel means.

Another object is to provide a wall scratcher for wells employing spring fingers of a novel type which may be readily attached to a sleeve rotatable upon a pipe insertable into a well or attached to carrier strips extending longitudinally, circumferentially or helically with respect to the pipe.

A more detailed object is to provide a novel form of wall scratcher of this type, including a carrier strip provided with apertures which afford clearance for coil springs forming a part of the spring fingers, which fingers are secured to the outer surface of the carrier strip.

Other objects and advantages will appear hereinafter.

In the drawings:

Figure 1 is a side elevation partly broken away showing a preferred embodiment of my invention as positioned on a well pipe;

Figure 2 is a fragmentary side elevation showing details of construction of the wall scratcher on an enlarged scale;

Figure 3 is a sectional elevation taken substantially on the lines 3—3 as shown in Figure 2;

Figure 4 is a diagrammatic sectional perspective view showing details of construction of the spring fingers and of the manner of their attachment on the outer surface of the carrier strip;

Figure 5 shows a modified form of my invention in which pairs of spring fingers are secured relative to a well pipe;

Figure 6 is a perspective view showing a hinged carrier strip;

Figure 7 is a side elevation showing a carrier strip which is formed after the manner of a helix;

Figure 8 is a sectional plan view taken substantially on the lines 8—8 as shown in Figure 7;

Figure 9 is a side elevation showing carrier strips mounted on the pipe which carrier strips

2

extend slightly more than one-half revolution around the circumference of the pipe; and

Figure 10 is a sectional plan view taken substantially on the lines 10—10 as shown in Figure 9.

Referring to the drawings, the well casing 10 extends downwardly into the bore hole 11. At spaced locations along the well pipe a plurality of wall scratcher devices may be mounted and these devices are generally designated 12. Each of these devices 12 may include a carrier strip 13 mounted on the pipe 10 and having a plurality of spring fingers 17 positioned thereon for contacting the wall of the bore hole.

As shown in Figure 1, this carrier strip 13 may take the form of an annular sleeve and is mounted on the pipe by passing it over the end thereof before it is threadedly connected to the next length of pipe. As shown, the sleeve 13 may be secured to the pipe 10 as by welding or it may be free to rotate thereon and to move axially between stops (not shown) on the pipe. Such stops may comprise the threaded collars which connect adjacent sections with the pipe or may comprise other stop elements limiting the longitudinal travel of the device 12 relative to the pipe 10.

As shown clearly in Figures 2, 3, and 4, the annular sleeve 13 is provided with parallel circumferentially extending, outwardly directed ribs 14 and positioned above and below a central cylindrical portion 15. A plurality of apertures 16 extend through the sleeve 13 and are positioned adjacent the outer edges of the central portion 15 and extend into the ribs 14. Each of the spring fingers 17 is provided with an outwardly extending shank 18 having a tip 19 which may be directed upwardly if desired. The shank 18 extends from one end of the coil spring 20, and the other end of the coil spring is provided with an axially extending leg 21 provided with a foot 22 at right angles thereto. It will thus be understood that each of the spring fingers 17 is formed of a single length of wire which includes the tip 19, shank 18, coil spring 20, leg 21, and foot 22. The apertures 16 provide clearance for each of the coil springs 20 so that the shank 18 may flex in service with respect to the anchored legs 21 and feet 22 without concentrating stresses in the shank above a safe value. The spring fingers 17 are mounted in pairs so that the axially projecting legs 21 of each pair are disposed in substantial axial alignment and so that the feet 22 of each pair lie adjacent to each other. Means are provided for anchoring each pair of legs and feet with respect to the outside surface 23 of the cen-

tral portion 15 of the sleeve 13 and as shown in the drawings this means includes an attachment clip generally designated 24. The attachment clip is shaped on its underside 25 to conform to the cylindrical surface 23 and is provided with an axially extending groove 27. These grooves extend into the clip from its undersurface 25. The aligned legs 21 are received within the axial groove 26 and the adjacent feet 22 are received within the circumferential groove 27. The clip 24 is secured to the outer surface 23 of the sleeve 13 by any convenient means, but I prefer to anchor it in this position by spot-welding the clip to the sleeve at the locations indicated by the numeral 28a and shown clearly in Figure 2. Each of the clips 24 is thus anchored to at least three spots and a firm attachment is thereby achieved. The feet 22 which extend at right angles with respect to the legs 21 anchor the ends of the legs 21 against rotary movement about the axis of the legs and the engagement between the axial groove 26 and the legs 21 prevents any other motion of the legs 21 with respect to the sleeve. In this way, relatively rigid attachment is provided for one end of each of the coil springs 20 with respect to the sleeve 13.

Since the scratcher devices 12 may be required to pass through fixed casing in the upper end of the hole as they are being inserted into the well bore they are required to flex inwardly to a very considerable extent and, furthermore, in service prior to and during cementing operations they may be moved vertically or circumferentially or both within the well bore for the purpose of removing the mud sheath and considerable flexing and bending of the shank 18 is therefore required. The coil springs 20 at the inner ends of shanks 18 therefore have considerable movement with respect to sleeve 13 and clearance for this movement is afforded by the aperture 16. The coil springs are protected against a contact with the sides of the well bore or with fixed casing in the well by means of the ribs 14 on the sleeve 13 and by reason of the guards or ribs 28 provided on either side of the attachment clips 24.

It is essential that the radial thickness of the scratcher device be maintained at a minimum in order that the pipe 10 and the scratcher devices assembled thereon may pass through fixed casing in the well bore having an inside diameter only slightly larger than the diameter of the pipe 10. It is also necessary to protect the coil springs 20 against contact with inside surface of the fixed well casing or with contact-restricted portions in the open well bore. It will be understood that the embodiment of my present invention meets both of these requirements.

The attachment clips 24 are shaped so that they may be placed in nested relation on the carrier strip or sleeve 13. Thus the forward nose portion 29 of each clip 24 is adapted to extend into the curved recess 30 provided on the next adjacent attachment clip. Each clip 24 secures a pair of spring fingers 17 in operative position and no rivets, pins, or other attachment elements are required. Furthermore, no part of the spring fingers extends inside the carrier strip or sleeve 13 and hence the annular axial thickness of the device is maintained at a minimum.

As shown in Figure 5, the pairs of spring fingers 17 may be mounted on a carrier strip 35 extending longitudinally of the pipe 10. The strip 35 may be fixed to the pipe by any convenient means, such as, for example, by welding 36. The clips 24 are spot-welded to the carrier strip 34 in

the same manner as that described above and the construction of the spring fingers and clips 24 are substantially identical to that set forth above. Apertures 37 may be provided in the carrier strip to provide clearance for the flexing of coil springs 20 at the inner ends of fingers 17. A plurality of strips 35 may be mounted on the pipe 10 and may be mounted so that the spring fingers 17 extend in various directions within the well bore. The spring fingers 17 act to remove the mud sheath from the wall of the well bore when the pipe 10 is rotated or reciprocated or both.

As shown in Figure 6, the carrier strip 40 may be formed of two halves connected by hinged joints 41 and 42. The mounting of the spring fingers 17 on this form of carrier strip 40 is substantially identical to that described in connection with Figures 1–4.

Figures 7 and 8 show a carrier strip 45 shaped as a helix. The carrier strip 45 may be suitably anchored to the well pipe 10 as by means of welding 46. The spring fingers 17 and their manner of attachment to the helical carrier strip 45 are substantially the same as described in connection with Figures 1–4.

The carrier strips 50, shown in Figures 9 and 10, preferably extend circumferentially slightly more than one-half revolution. They are sufficiently resilient to permit them to be moved into position in a radial direction. They are therefore installed after the manner of a spring clip and when once in position remain there without any supplemental holding means while being welded or otherwise secured to the pipe 10. Weld metal 51 may be deposited at intervals as shown. The construction and mounting of the spring fingers 17 on the carrier strip 50 are identical to that described in connection with Figures 1–4. The carrier strips 50 may be mounted in pairs on the pipe 10 or may be spaced in any desired pattern along its length.

Having fully described my invention, it is to be understood that I do not wish to be limited to the details herein set forth, but my invention is of the full scope of the appended claims.

I claim:

1. In a wall scratcher for wells, the combination of a carrier strip adapted to be mounted on a pipe insertable into a well bore, a plurality of wire scratcher fingers mounted on the carrier strip, each of said fingers being formed of a continuous length of wire having one end resting on the outer surface of the carrier strip, said end of each wire comprising an axially extending leg and a circumferentially extending foot, the legs of adjacent fingers being coaxially positioned and their respective feet lying side by side, an attachment clip for securing each pair of adjacent scratcher fingers to the carrier strip, said clip being provided with a first groove for reception of said aligned legs and a second groove for reception of said feet, and means for securing each of the clips to the outer surface of the carrier strip.

2. In a wall scratcher for wells, the combination of a carrier strip adapted to be mounted on a pipe insertable into a well bore, the carrier strip comprising at least a portion of a cylinder and having a pair of circumferentially extending radially projecting ribs, a plurality of wire scratcher fingers mounted on the carrier strip, each of said fingers being formed of a continuous length of wire having one end resting on the outer surface of the carrier strip, said length of wire being coiled to form a spring at a location

intermediate the ends of the wire, the carrier strip having apertures formed therein along the inner edges of said ribs for reception of a portion of said coil springs and to provide clearance for movement of the springs under flexing of the scratcher finger, and securing means for attaching each of said scratcher fingers to said carrier strip including an element secured to the outer surface of the strip between said ribs and overlying a portion of the inner ends of said wires.

3. In a wall scratcher for wells, the combination of a carrier strip adapted to be mounted on a pipe insertable into a well bore, the carrier strip having a plurality of longitudinally spaced, outwardly projecting ribs, wire scratcher means on the carrier strip including attachment means engaging the outer surface of the carrier strip at a region between the ribs and a pair of scratcher fingers each having a portion adjacent said attachment means coiled to form a spring, the carrier strip having apertures formed therein adjacent said ribs for the reception of a portion of the coil springs and to provide clearance for movement of the springs under flexing of the scratcher fingers, and a member secured to the outer surface of the carrier strip between the ribs and overlying the attachment means for mounting the wire scratcher means upon the carrier strip.

4. A wall scratcher for wells as defined in claim 3, in which the mounting member securing the wire scratcher means to the carrier strip is grooved to receive the attachment means of said wire scratcher means.

5. In a wall scratcher for wells, the combination of a carrier strip adapted to be mounted on a pipe insertable into a well bore, the carrier strip having a plurality of radially outwardly projecting ribs formed integrally therewith, a plurality of wire scratcher fingers, each of said fingers having an attachment portion thereof resting on the outer surface of the carrier strip, each wire scratcher finger having a portion adjacent its attachment portion coiled to form a spring, the carrier strip having apertures formed therein adjacent said ribs for the reception of a portion of said coil springs and to provide clearance for movement of the springs under flexing of the scratcher fingers, and securing means for attaching each of said scratcher fingers to said carrier strip including an element secured to the outer surface of the carrier strip between the ribs and overlying said attachment portion of the scratcher fingers.

6. In a wall scratcher for wells, the combination of a carrier strip adapted to be mounted on a pipe insertable into a well bore, the carrier strip having a plurality of radially outwardly projecting ribs formed integrally therewith, a plurality of wire scratcher fingers, each of said fingers having an attachment portion thereof resting on the outer surface of the carrier strip, the attachment portion comprising an axially extending leg and a foot extending at an angle thereto, each wire scratcher finger having another portion coiled to form a spring, the carrier strip having apertures

formed therein along the inner edges of said ribs for the reception of a portion of said coil springs and to provide clearance for movement of the springs under flexing of the scratcher fingers, and securing means for attaching each of said scratcher fingers to said carrier strip including a clip welded to the outer surface of the carrier strip between the ribs, the clip overlying said attachment portion of the scratcher fingers and being grooved to receive the leg and foot thereof.

7. In a wall scratcher for wells, the combination of a carrier strip adapted to be mounted on a pipe insertable into a well bore, the carrier strip comprising at least a portion of a cylinder and having a pair of circumferentially extending radially outwardly projecting ribs, a plurality of wire scratcher fingers, each of said fingers having an attachment portion thereof resting on the outer surface of the carrier strip between said ribs, each wire scratcher finger having a portion adjacent its attachment portion coiled to form a spring, the carrier strip having apertures formed therein along the inner edges of said ribs for the reception of a portion of said coil springs and to provide clearance for movement of the springs under flexing of the scratcher fingers, and securing means for attaching said scratcher fingers to said carrier strip including an element secured to the outer surface of the carrier strip between the ribs and overlying said attachment portion of the scratcher fingers.

8. In a wall scratcher for wells, the combination of a carrier strip adapted to be mounted on a pipe insertable into a well bore, the carrier strip comprising at least a portion of a cylinder and having a pair of circumferentially extending radially outwardly projecting ribs, a plurality of wire scratcher fingers, each of said fingers having an attachment portion thereof resting on the outer surface of the carrier strip between said ribs, each wire scratcher finger having a portion adjacent its attachment portion coiled to form a spring, the carrier strip having apertures formed therein along the inner edges of said ribs for the reception of a portion of said coil springs and to provide clearance for movement of the springs under flexing of the scratcher fingers, and securing means for attaching each of said scratcher fingers to said carrier strip including a clip welded to the outer surface of the carrier strip between the ribs, the clip overlying said attachment portion of the scratcher fingers and being grooved to receive said attachment portion.

KENNETH A. WRIGHT.

REFERENCES CITED

The following references are of record in the file of this patent:

UNITED STATES PATENTS

Number	Name	Date
2,151,416	Black et al.	Mar. 21, 1939
2,374,317	Wright	Apr. 24, 1945
2,412,876	Edwards	Dec. 17, 1946
2,421,434	Reistle et al.	June 3, 1947