No. 701,961. Patented June 10, 1902.

A. W. SWANITZ.

MERCHANDISE TRANSFER APPARATUS.

(Application filed Feb. 20, 1901.)

(No Model.) 3 Sheets—Sheet 1.

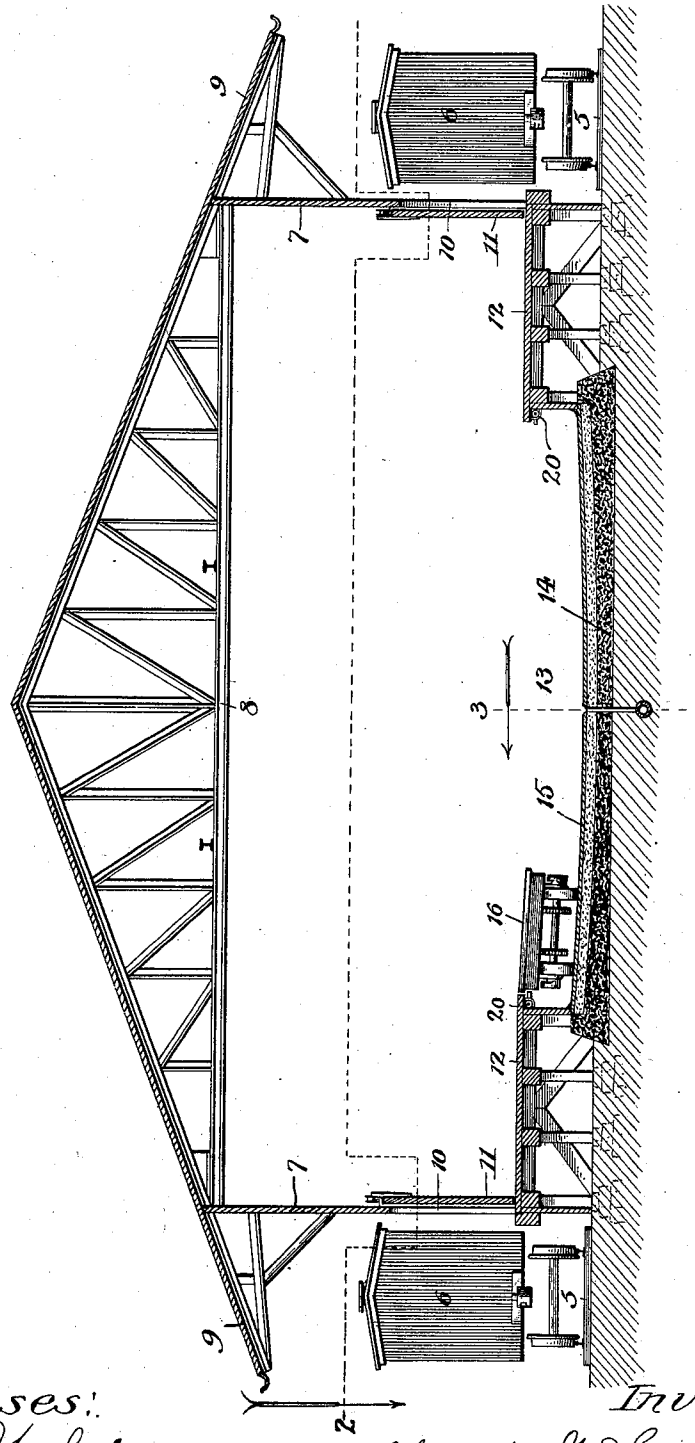

Fig. 1.

Witnesses:
Chas. E. Gaylord,
John Enders, Jr.

Inventor:
Alexander W. Swanitz
By Paul Synnestvedt
Atty.

THE NORRIS PETERS CO., PHOTO-LITHO., WASHINGTON, D. C.

No. 701,961. Patented June 10, 1902.

A. W. SWANITZ.

MERCHANDISE TRANSFER APPARATUS.

(Application filed Feb. 20, 1901.)

(No Model.) 3 Sheets—Sheet 2.

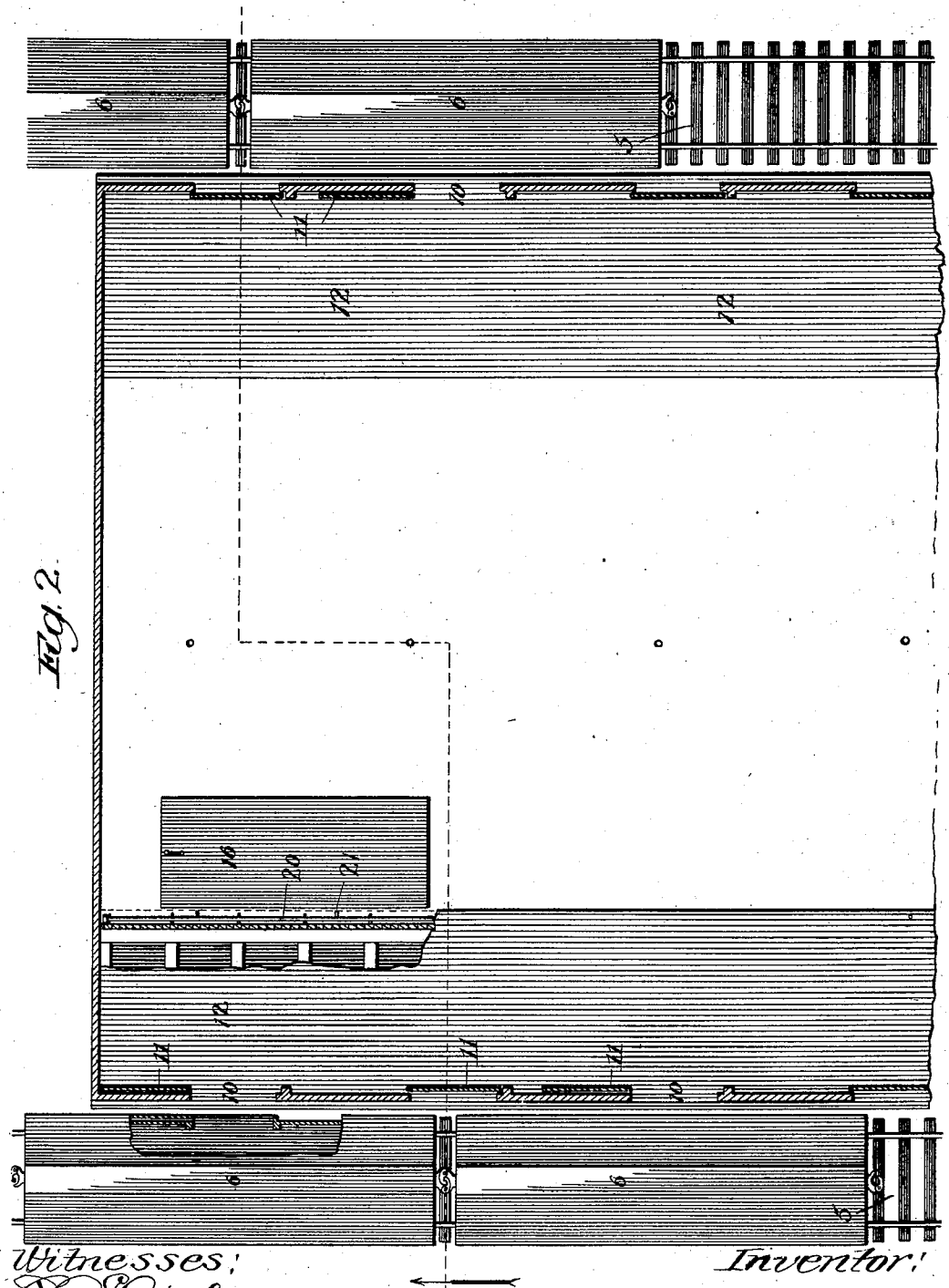

Fig. 2.

Witnesses:
Chas. E. Gaylord
John Enders Jr.

Inventor:
Alexander W. Swanitz
By Paul Synnestvedt
Atty

THE NORRIS PETERS CO., PHOTO-LITHO., WASHINGTON, D. C.

No. 701,961. Patented June 10, 1902.

A. W. SWANITZ.

MERCHANDISE TRANSFER APPARATUS.

(Application filed Feb. 20, 1901.)

(No Model.) 3 Sheets—Sheet 3.

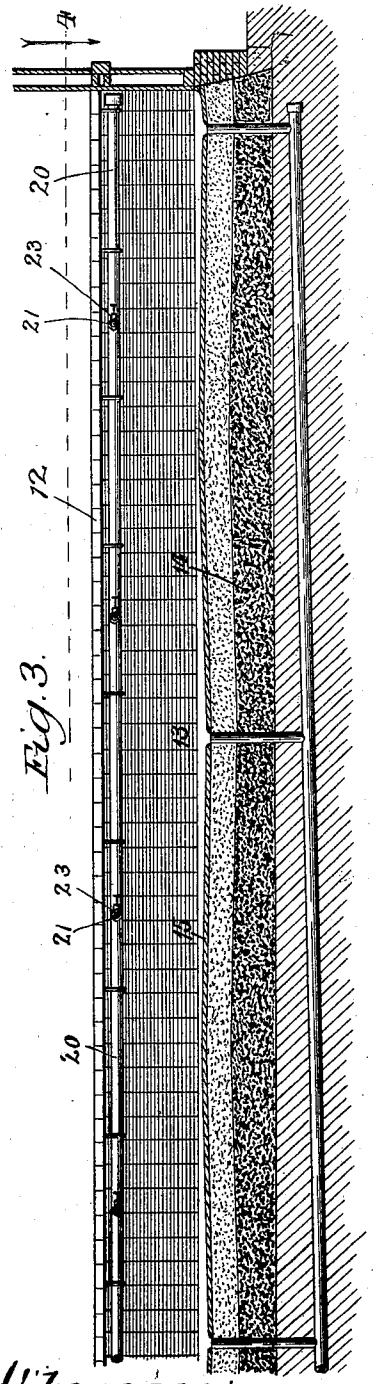

Fig. 3.

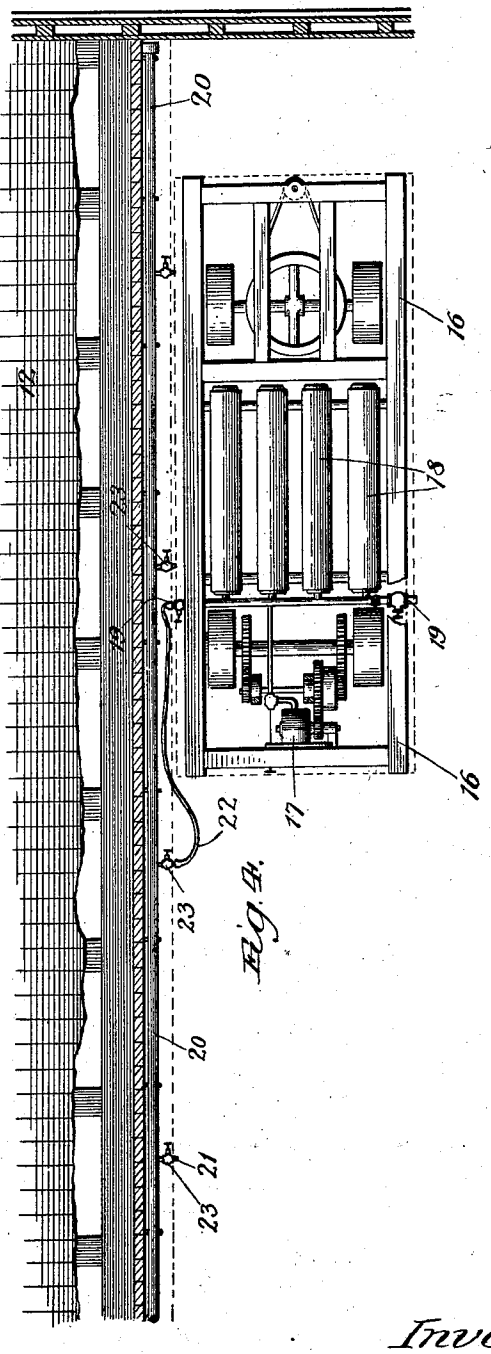

Fig. 4.

Witnesses:
Chas. P. Taylor,
John Enders Jr.

Inventor:
Alexander W. Swanitz
By Paul Synnestvedt
Atty.

THE NORRIS PETERS CO., PHOTO-LITHO., WASHINGTON, D. C.

UNITED STATES PATENT OFFICE.

ALEXANDER W. SWANITZ, OF CHICAGO, ILLINOIS, ASSIGNOR TO SWANITZ COMPANY, OF CHICAGO, ILLINOIS, A CORPORATION OF DELAWARE.

MERCHANDISE-TRANSFER APPARATUS.

SPECIFICATION forming part of Letters Patent No. 701,961, dated June 10, 1902.

Application filed February 20, 1901. Serial No. 48,173. (No model.)

To all whom it may concern:

Be it known that I, ALEXANDER WILLIAM SWANITZ, a citizen of the United States, residing in Chicago, Cook county, Illinois, have invented certain new and useful Improvements in Merchandise-Transfer Apparatus, (Case No. 2,) of which the following, taken in connection with the accompanying drawings, is a specification.

My invention relates to apparatus for use in transferring merchandise or goods from car to car when the same are upon the same track not far apart or upon different tracks arranged a short distance away from each other, and has for its object, primarily, the provision of improved means whereby such transfer can be greatly facilitated and the cost thereof reduced.

In carrying out my invention I provide an arrangement of devices which I have illustrated in preferred form in the accompanying drawings, in which—

Figure 1 is a transverse section showing a merchandise-transfer apparatus embodying my invention. Fig. 2 is a plan section of the same, also showing some of the details. Fig. 3 is a partial side elevation of one portion of my invention, and Fig. 4 is a partial plan section on a larger scale than that shown in Figs. 1 and 2.

Referring now more particularly to Fig. 1, it will be seen that between a couple of tracks 5, on which stand some freight-cars 6, I have constructed a transfer shed or house provided with walls 7 and a roof 8, the roof being preferably extended out over the tracks, as shown at 9, in order to partially protect the cars. In the walls 7 are arranged a plurality of door-openings 10, covered by doors 11, and upon the inside of the said door-openings are platforms 12 of such dimension that a considerable space will be left between the same on opposite sides of the transfer-house. Between the platforms 12 I arrange a traction-floor 13, the foundation of which, 14, is preferably of concrete, and the upper surface of which, 15, is preferably of some hard smooth-wearing material, such as steel or other suitable material. Constructed to run upon the floor 13 I provide a truck or trucks 16, arranged to be driven by means of a fluid-pressure motor 17, (see Fig. 4,) the said motor being supplied with pressure from a storage tank or tanks 18, having an intake or valve-controlled inlet 19. I prefer to place one of the intake or valve-controlled inlet-openings at each side of the truck, as shown in Fig. 4.

Adjacent to the inner side of the platforms 12, and preferably immediately below the projecting edge of the floor thereof, I arrange a fluid-pressure-supply main 20, provided with valve-controlled outlets 21, arranged at intervals thereon, and as a means for forming a connection between said valve-controlled outlets and the intake on the truck I provide the truck with a flexible connection or hose 22, adapted to be readily engaged and disengaged from said valve-controlled outlets, whereby the storage-tanks upon the truck can be charged while the truck is being loaded in any position adjacent to the tracks 5 or the platforms 12.

The operation of my invention is as follows: The truck 16, standing adjacent to the platform 12, as shown in Fig. 1, while it is being loaded with merchandise which has been taken from the car 6 across the platform and which has to be transferred to some other car—as, for example, the car adjacent to the platform on the opposite side—is coupled with one of the valve-controlled outlets from the fluid-pressure-supply main by means of the hose or flexible connection 22, as shown in Fig. 4, and the controlling-valves 23 opened. The pressure in the main, which may be perhaps in excess of seven hundred pounds and is preferably compressed air supplied from any suitable source, then flows into the storage-tanks 18, charging the same while the truck is being loaded. The hose 22 being disconnected, the truck can now be started by means of the motor 17, the operation of which is controlled by suitable valve mechanism, (not shown,) and, running across or along the traction-floor 13, be brought to any position desired where the merchandise carried can be conveniently transferred across the platform 12 onto the car for which it was intended.

It is obvious that in an apparatus constructed in accordance with my invention I

am enabled to readily and economically transfer freight from any car on either of the tracks 5 to any other car on either of the side tracks in which it may be desired to put the goods, and the traction-floor being entirely free from rails or unevennesses, but little power will be required in moving the truck about, and there will be no interference between any two trucks, although as many can be employed as may be desired, provided only sufficient room be left between them and the platforms to move them about.

Having thus described my invention, what I claim as new, and desire to secure by Letters Patent, is—

1. A merchandise-transfer apparatus comprising a traction-floor, a truck for carrying merchandise thereon, a fluid-pressure motor for moving said truck, steering mechanism for guiding said truck on said floor, a storage-reservoir upon said truck for supplying said motor with pressure, a storage-reservoir intake upon said truck, a fluid-pressure-supply main supported adjacent to said traction-floor, a valve-controlled outlet from said main, and means for connecting said outlet with said intake, substantially as described.

2. A merchandise-transfer apparatus comprising a traction-floor, a truck for carrying merchandise thereon, a fluid-pressure motor for moving said truck, steering mechanism for guiding said truck on said floor, a storage-reservoir upon said truck for supplying said motor with pressure, a storage-reservoir intake upon said truck, a fluid-pressure-supply main supported adjacent to said traction-floor, a plurality of valve-controlled outlets from said main arranged at intervals thereon, and means for connecting said outlet with said intake, substantially as described.

3. A merchandise-transfer apparatus comprising a traction-floor, a truck for carrying merchandise thereon, a fluid-pressure motor for moving said truck, steering mechanism for guiding said truck on said floor, a storage-reservoir upon said truck for supplying said motor with pressure, a storage-reservoir intake upon said truck, a fluid-pressure-supply main at each side of said traction-floor supported adjacent to said traction-floor, valve-controlled outlets from said mains, and means for connecting said outlet with said intake, substantially as described.

4. A merchandise-transfer apparatus comprising a traction-floor, a truck for carrying merchandise thereon, a fluid-pressure motor for moving said truck, steering mechanism for guiding said truck on said floor, a storage-reservoir upon said truck for supplying said motor with pressure, a storage-reservoir intake upon said truck, a fluid-pressure-supply main at each side of said traction-floor, and under said platform, supported adjacent to said traction-floor, a valve-controlled outlet from said main, and means for connecting said outlet with said intake, substantially as described.

5. A merchandise-transfer apparatus comprising two parallel tracks, two platforms arranged within said tracks and adjacent thereto, a traction-floor between said platforms, a merchandise-carrying truck upon said floor, a fluid-pressure motor upon said truck provided with a storage-reservoir and a valve-controlled intake for said reservoir, a fluid-pressure-supply main supported adjacent to said traction-floor, a pluralty of valve-controlled outlets from said main arranged at intervals thereon, and means for connecting said intake with the outlet on said main whereby the storage-truck can be charged while the same is being loaded adjacent to said platform, substantially as described.

ALEXANDER W. SWANITZ.

Witnesses:
PAUL CARPENTER,
FRANK O. GREEN.