US00D348311S

United States Patent [19]

Witzig

[11] Patent Number: Des. 348,311

[45] Date of Patent: ** Jun. 28, 1994

[54] COVER FOR CONCEALED TOILET FLUSH TANK

[75] Inventor: Uli Witzig, Wolfhausen, Switzerland

[73] Assignee: Geberit AG, Jona, Switzerland

[**] Term: 14 Years

[21] Appl. No.: 951,543

[22] Filed: Sep. 24, 1992

[30] Foreign Application Priority Data

Mar. 26, 1992 [CH] Switzerland DM/002407

[52] U.S. Cl. D23/313

[58] Field of Search 4/353, 378, 408, 409, 4/410, 419; D23/295-301, 313

[56] References Cited

U.S. PATENT DOCUMENTS

D. 95,209	4/1935	Morgan	D23/301
D. 101,536	10/1936	Karstadt	D23/301
D. 125,055	2/1941	Lewis	D23/301
D. 237,886	12/1975	Korol	D23/313
D. 262,647	1/1982	Kaiser	D23/301
3,760,428	9/1973	Korol	4/353
3,968,525	7/1976	Alexander	4/410

FOREIGN PATENT DOCUMENTS

1342708	1/1974	United Kingdom	4/353

Primary Examiner—James R. Largen

Attorney, Agent, or Firm—McGlew and Tuttle

[57] CLAIM

The ornamental design for a cover for concealed toilet flush tank, as shown and described.

DESCRIPTION

FIG. 1 is a perspective view taken from the top, front and right side of a cover for a concealed toilet flush tank showing my new design;

FIG. 2 is a rear elevational view thereof;

FIG. 3 is a front elevational view thereof;

FIG. 4 is a right side elevational view thereof;

FIG. 5 is a left side elevational view thereof;

FIG. 6 is a bottom plan view thereof; and,

FIG. 7 is a top plan view thereof.

The fragmentary broken line representation of a bathroom wall in FIG. 1 is for purposes of illustration only and forms no part of the claimed design.

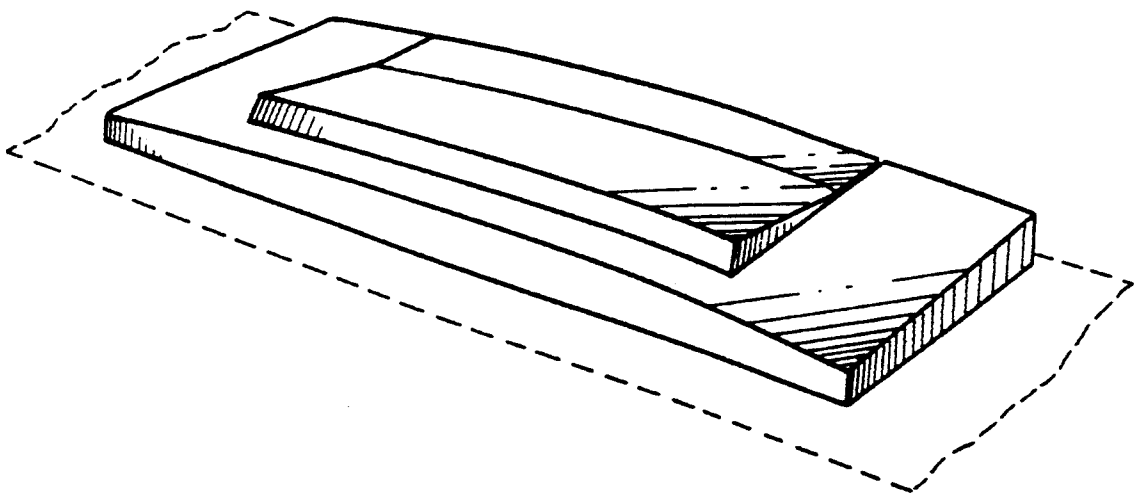

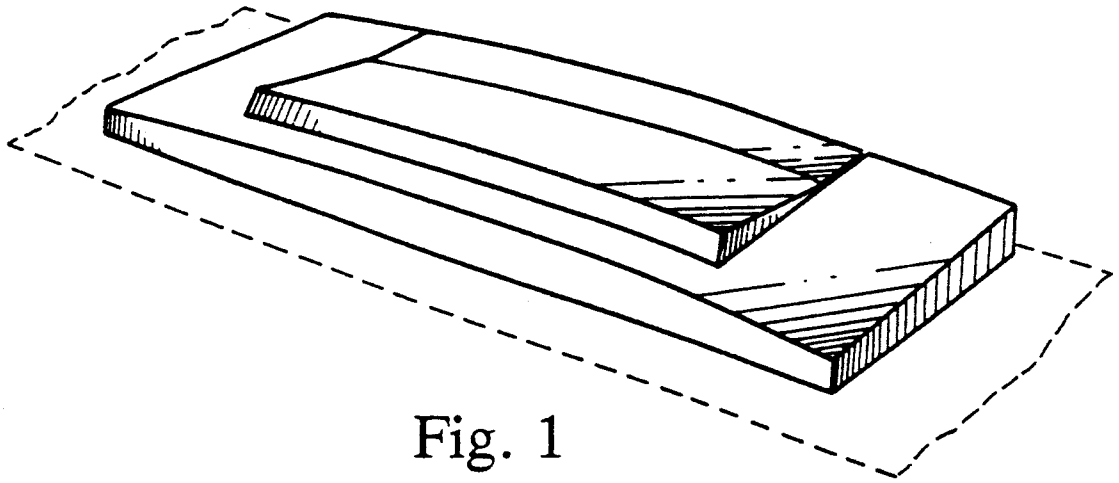

Fig. 1



Fig. 2

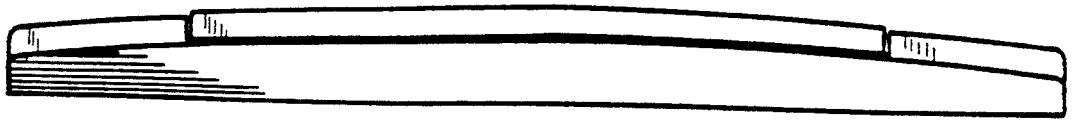

Fig. 3

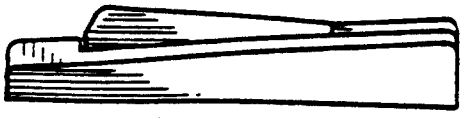

Fig. 4

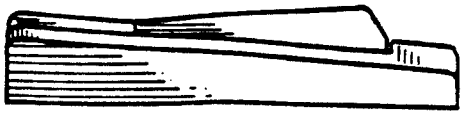

Fig. 5

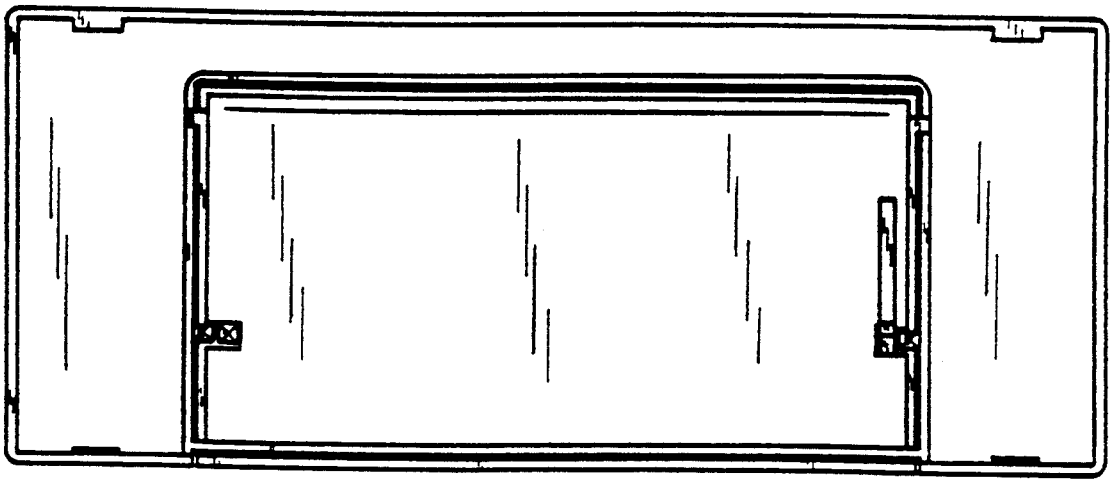

Fig. 6

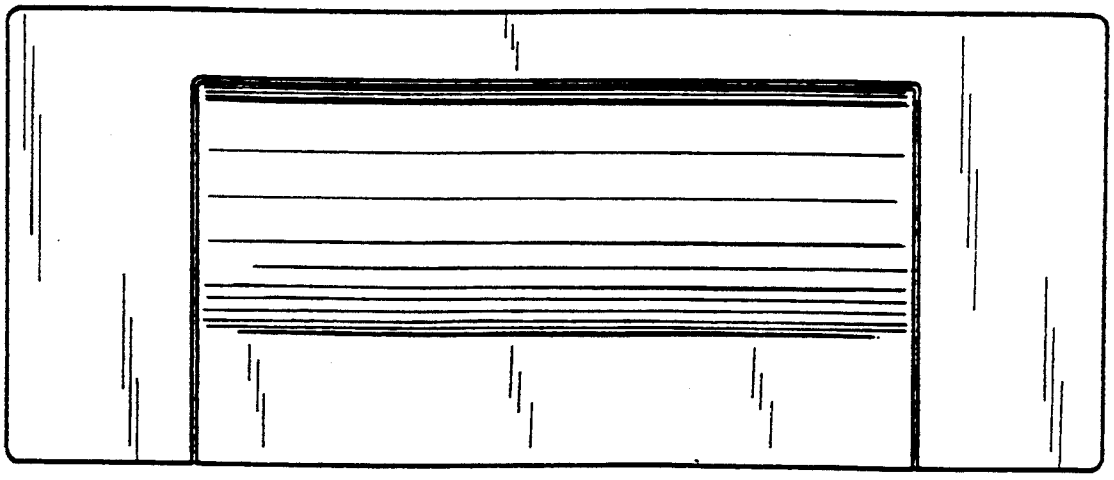

Fig. 7