June 2, 1936. W. M. BAUMHECKEL 2,043,146

INTERNAL COMBUSTION ENGINE

Filed April 27, 1933

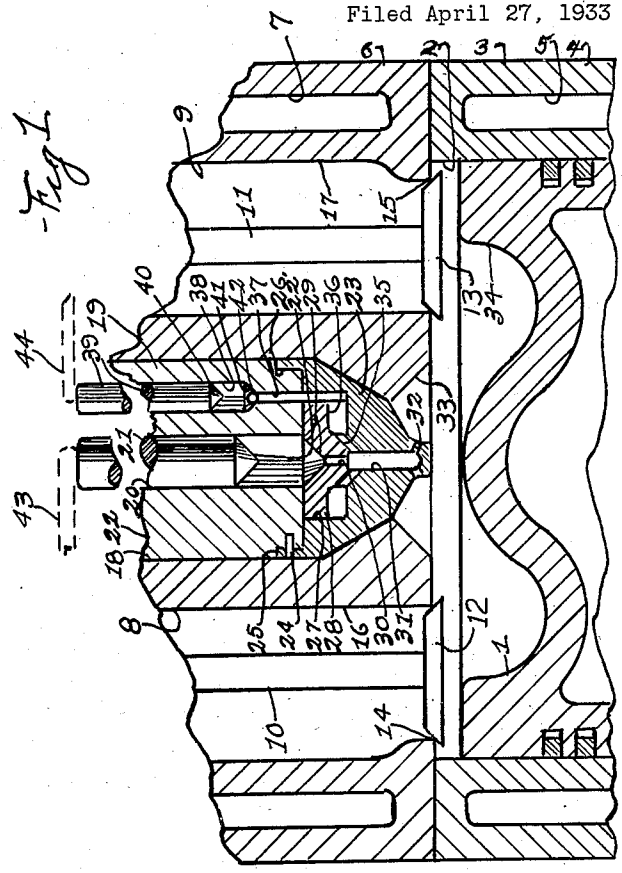

Fig. 1.

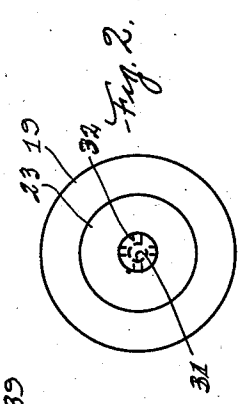

Fig. 2.

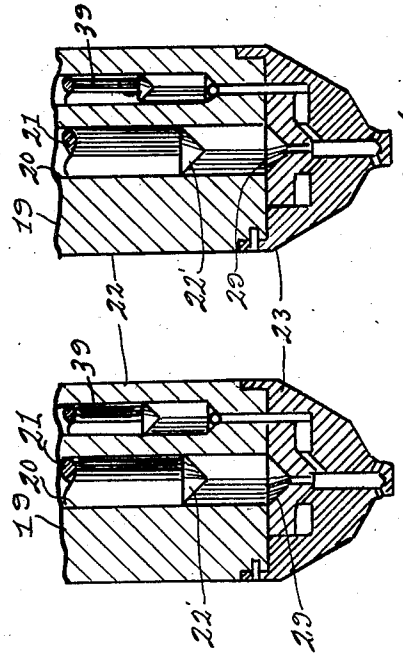

Fig. 3.

Fig. 4.

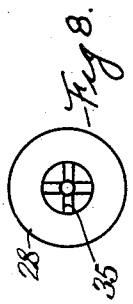

Fig. 8.

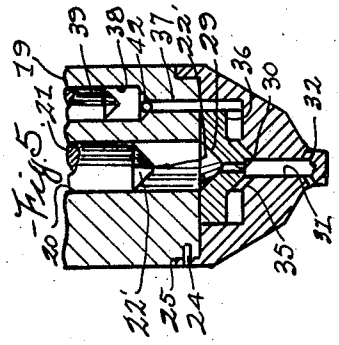

Fig. 5.

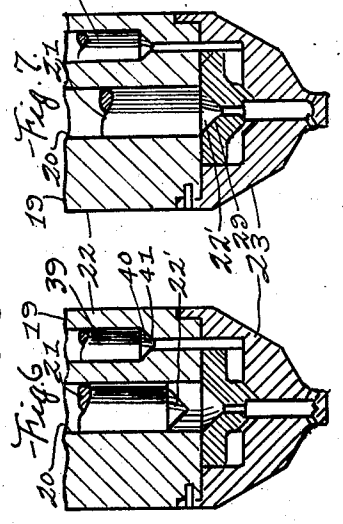

Fig. 7.

Fig. 6.

INVENTOR.

WILLIAM M BAUMHECKEL

BY Leo. P. Parker

ATTORNEY.

Patented June 2, 1936 2,043,146

UNITED STATES PATENT OFFICE

2,043,146

INTERNAL COMBUSTION ENGINE

William M. Baumheckel, Connersville, Ind.

Application April 27, 1933, Serial No. 668,202

11 Claims. (Cl. 123—33)

The invention relates to internal combustion engines of the type which utilize oil as fuel and which is exploded by the heat of the air compressed by the pistons within the combustion chambers of the cylinders.

Considerable difficulty has been experienced in the past by the operators of oil burning internal combustion engines, for the reason that the unburned oil on the lower end of the fuel injecting mechanism forms carbon, thereby partially or entirely clogging the minute openings or perforations through which the fuel is injected from the atomizing or vaporizing chamber into the engine cylinder. Also, an excess amount of unburned fuel finally results in the intake and exhaust valves failing to seat properly on account of formation of carbon caused by contact of the unburned fuel with hot metal within the engine.

Another disadvantage with the usual type Diesel or oil burning internal combustion engine is that usually the oil is not sufficiently heated before it passes from the vaporizing chamber into the engine cylinder, with the result that the oil is not efficiently vaporized and mixed with the air, whereby the unburned fuel finally descends into the crank case of the engine thereby diluting the lubricating oil therein.

It is generally recognized and known that the unburned fuel disadvantageously interferes with efficient operation of the engine, because insufficient oxygen is provided at the point or location of the perforations or ports, where the fuel oil is injected into the engine cylinder, with the result that the over-rich gases are inefficiently atomized whereby oil collects in the area of the above mentioned perforations and eventually the part of the fuel which is not exploded necessarily finally descends into the crank case or is transformed into carbon by contact with the heated parts of the interior of the engine.

Therefore, the general object of the invention is to provide simple, efficient and practical means whereby the oil fuel is properly mixed with air before being injected into the engine cylinder.

Other objects of the invention are to provide means whereby vaporizing ports, through which the fuel is injected into the cylinder, are maintained clean and cool by action of air therethrough, after the explosion stroke of the piston; and to provide means whereby the excess fuel, which has a tendency to collect adjacent the atomizer ports, is caused to be drawn upwardly and removed from the area surrounding said ports.

Other objects of the invention will be apparent, by reference to the drawing, the hereinafter description and claims

The invention consists in the combination of the elements, arrangement of the parts and in the details of the construction, as hereinafter fully explained.

In the drawing:

Fig. 1 is a vertical section taken through the upper part of a four cycle engine, with parts broken away, and showing parts in dotted lines;

Fig. 2 is a bottom plan view of the fuel plug;

Fig. 3 is a vertical section, taken through the fuel plug, and showing the parts as positioned during the intake stroke of the piston;

Fig. 4 is the same showing the parts positioned during the compression stroke of the piston;

Fig. 5 is the same showing the parts positioned during the first part of the expansion or power stroke of the piston;

Fig. 6 is the same showing the parts positioned during the last part of the expansion or power stroke of the piston;

Fig. 7 is the same showing the parts positioned during the exhaust stroke of the piston; and

Fig. 8 is a plan view of the vaporizer or filler for the fuel plug.

In the preferred construction of the invention I provide the reciprocating piston 1 in the cylinder 2 of a four cycle engine 3.

The engine block 4, in which the piston reciprocates, has formed therein the usual water jacket 5. The engine head 6, suitably fixed to the top of the engine block, also has formed therein a suitable water jacket 7.

Movably mounted in the valve ports 8 and 9, suitably arranged in the head 6, are the intake and exhaust valves 10 and 11, which may be of any suitable and desirable construction. The heads 12 and 13, of the valves 10 and 11, are adapted, in the usual manner, to contact their seats 14 and 15 for the purpose of intermittently closing the intake and exhaust passages 16 and 17 formed in the engine head 6.

Directly above the cylinder 2, and formed in the head 6, is the orifice 18 in which is received the plug or injector 19 having the central bore 20 in which is slidably mounted the air injector plunger 21. The plug 19 comprises the body 22 having the shell 23 fixed to its bottom preferably by the pin 24 which extends through the upwardly extending flange 25 fitted in the groove 26 formed in the lower edge of the body 22. In the upper surface of the shell 23 is the concave depression 27 into which is fitted the conical filler 28 having in its upper surface the concave

depression 29 which is in alignment with the bore 20 in the body 22.

The bottom of the depression 29 is concave or conical and has the same contour as the lower end of the plunger 21, which is convex conical, whereby the conical end 22' of the plunger is adapted, when the plunger is in its lowermost position, to fit into the concave or conical bottom 29. Communicating with the bottom of the depression 29 is the passage 30 which communicates with the passage 31, in the shell 23. The perforations or atomizing ports 32, in the bottom of the shell 23, communicate with the passage 31 and lead into the vaporizing chamber 33 formed in the bottom of the engine head 6. The chamber 33 communicates with the combustion space 34 in the cylinder 2 directly above the piston 1. Communicating with the passage 31 are the passages 35 which lead to the oil chamber 36 intermediate the filler 28 of the shell 23.

Communicating with the chamber 36 is the fuel duct 37 whose side walls extend upwardly. The top of the fuel duct 37 communicates with the bore or mixing chamber 38 having slidably mounted therein the fuel mixing plunger 39 whose lower convex conical end 40 is adapted to seat in the concave conical bottom 41 of the bore 38. Communicating with the lower concave bottom 41, of the bore or chamber 38, is the oil supply hole 42 through which a suitable quantity of oil fuel is adapted to be received at desired intervals. Suitable mechanism may be provided for assuring the desired quantity of fuel oil at desired times to be passed through the hole 42 into the concave bottom 41, of the chamber 38, for purposes hereinafter fully explained.

The mechanical operating means for actuating the air injection plunger 21 and the fuel mixing plunger 39 is not shown in detail in the drawing, as any desired and suitable devices or form of devices may be utilized for this purpose. The actuating members 43 and 44, shown diagrammatically in dotted lines, may be considered as parts which may or may not co-operate with other mechanism for operating the air injection plunger and the fuel mixing plungers 21 and 39, respectively.

The plungers 21 and 39 are shown positioned in Fig. 1 during the expansion or power stroke of the piston 1.

Now, referring to the Figs. 3, 4, 5, 6 and 7, the operation of the invention will be explained. During the intake stroke of the piston the plungers 21 and 39 are positioned in their uppermost position and the chamber 33, passages 31 and 32, the fuel duct 37, and chamber 36 are empty. During the compression stroke of the piston, the plungers 21 and 39 remain in the same position and air is forced under compression into the bore 20, chamber 33, ports or passages 31 and 32, fuel duct 37 and chamber 36. During the intake stroke and the early part of the compression stroke the fuel, which is oil, is injected by suitable means through the hole 42 into the lower concave portion 41 of the bore 38. At the beginning of the expansion or explosion stroke of the piston the mechanism, illustrated by the members 43 and 44, force the plungers 21 and 39 downwardly. The plunger 39 forces oil from the bore 38 and its lower end 40 becomes seated in its seat or concave bottom 41, of the bore 38, before the plunger 21 has reached its downmost position, whereby after the charge of oil from the bore 38 has been forced through the passages 37, 36 and 35 and mixed with air from the bore 20 in the passages 31 and 32, the plunger 21 continues its downward movement and forces all of the oil from the passages 31 and 32 thereby cleaning these latter mentioned passages free of oil. The over-rich combustion charge of gasified oil and air, which passes through the passages 31 and 32, is vaporized and is ignited in the cylinder 2 probably before the plunger 21 has reached its downmost position. As shown in Fig. 6, after the plunger 39 has reached its downmost position the plunger 21 continues downward thereby forcing air through the passages 30 and 31, and the ports 32 whereby these passages and ports are cleansed from oil. As shown in Fig. 7, during the exhaust stroke of the piston, the plungers 21 and 39 remain in a downward position with their conical ends respectively seating in the seats 29 and 41, whereby none of the exhaust gases are permitted to enter the bore 20 or 38.

As previously explained, and as shown in Fig. 3, when the piston 1 moves downwardly for the purpose of permitting fresh air to enter the cylinder 2, through the intake passage or port 16, the mechanism, illustrated in Fig. 1 as members 43 and 44, cause the plungers 21 and 39 to move upwardly, whereby fresh air is caused to pass through the passages or ports 32 thereby keeping them clean and free from foreign matter and other materials. Simultaneously the air passes into the chamber 33, passages 31 and 32, bore 20, duct 37 and chamber 36 forcing the fuel, which has remained in the duct 37, upwardly into the bore 38.

An advantage of the invention is that during the intake and compression strokes of the piston the fuel is removed from the lower end of the plug 19 and the ports 32 contain no oil. Therefore, the lower end of the plug and the ports 32 are unlikely to become coated with carbon which would result if the unburned fuel were permitted to remain in contact with the heated metal comprising the lower end of the plug 19.

Still another advantage of the invention is that during the exhaust stroke of the piston, as shown in Fig. 7, while the plungers 21 and 39 are positioned in their downmost position, rich fuel, such as passes through the oil duct 37, is not within the passages 30 and 31, for reasons herein previously explained, whereby carbon does not form in these passages.

It is readily apparent that the fuel and air, which passes into the passages 31 and 32, is a combustible charge which, when ejected into the cylinder 2, is thoroughly broken up or atomized and being provided with a sufficient amount of oxygen perfect combustion is assured, whereby collection of unburned fuel in the cylinder, on the top of the piston 1 and on the bottom of the plug 19 or in the various passages, is eliminated.

While I believe that the form of the invention illustrated in the drawing and referred to in the above description, as the preferred embodiment, is efficient and practicable, yet realizing that the conditions concurrent with the adoption of the device will necessarily vary, I desire to emphasize the fact that changes in the details may be resorted to, when required, without sacrificing any of the advantages of the invention as defined in the claims.

Various changes may be made in the general form and arrangement of mechanical parts described without departing from the invention. Hence I do not limit myself to the precise details of the materials or the size and shape thereof as

set forth, but consider myself at liberty to make such changes and alterations as fairly fall within the spirit and scope of the appended and final claims.

What I claim as new and desire to secure by Letters Patent is:

1. In an oil engine, the combination of a cylinder and a piston operable therein, an injector having its discharge end subjected to the heat of combustion in the combustion space, a mixing chamber and passage means therein, means to deliver a charge of oil into said mixing chamber, means including said piston to simultaneously deliver a charge of air through said passage means from said combustion space, into said mixing chamber, means to inject said charge of oil and said charge of air through said passage means into said combustion space, and means to inject air thereafter, into said combustion space through at least a portion of said passage means, whereby to clear the passage means.

2. In an oil engine, the combination of a cylinder and a piston operable therein, an injector having its discharge end subjected to the heat of combustion in the combustion space and provided with a vaporizing means, a mixing chamber and passage means adjacent said vaporizing means, means to deliver a charge of oil into said mixing chamber, means including said piston to simultaneously deliver a charge of air through said passage means from said combustion space into said mixing chamber, means to inject said charge of oil and said charge of air through said passage means, and past said vaporizing means into said combustion space, and means to inject air thereafter into said combustion space through said passage means and vaporizing means.

3. In an oil engine, the combination of a cylinder and a piston operable therein, an injector having its discharge end subjected to the heat of combustion in the combustion space, a mixing chamber and passage means communicating therewith, means to deliver a charge of oil into said mixing chamber, means to supply a charge of air to said chamber, means to inject said charge of oil and said charge of air through said passage means into said combustion space, and means to subsequently deliver a charge of air through at least a portion of said passage means to clear same.

4. In an oil engine, the combination of a cylinder and a piston operable therein, an injector having its discharge end subjected to the heat of combustion in the combustion space, a mixing chamber and passage means communicating therewith, means to deliver a charge of oil into said mixing chamber, means to deliver a charge of air through said passage means into said mixing chamber, means to inject said charge of oil and air through said passage means into said combustion space, and means to inject air thereafter, into said combustion space through said passage means, whereby to clear the passage means.

5. In an oil engine, the combination of a cylinder and a piston operable therein, an injector having its discharge end subjected to the heat of combustion in the combustion space and provided with a vaporizing means, a mixing chamber and passage means adjacent said vaporizing means, means to deliver a charge of oil into said mixing chamber, means to deliver a charge of air through said passage means into said mixing chamber, means to inject said charge of oil and said charge of air through said passage means, and through said vaporizing means into said combustion space, and means to inject air thereafter into said combustion space through said passage means and vaporizing means.

6. In an oil engine, the combination of a cylinder and a piston operable therein, an injector having its discharge end subjected to the heat of combustion in the combustion space, a mixing chamber and passage means communicating therewith, means to deliver a charge of oil into said mixing chamber, means including said piston to supply a charge of air from said combustion space to said chamber through said passage means, simultaneously with said delivery of the charge of oil, means to inject said charge of oil and said charge of air through said passage means into said combustion space, and means to subsequently deliver a charge of air through said passage means to clear same.

7. In an oil engine, the combination of a cylinder and a piston operable therein, an injector plug having a discharge end formed of a separable hollow shell defining a vaporizing chamber, said end being positioned for subjection to the heat of combustion in the combustion space, said injector having a mixing chamber, and passage means communicating with said vaporizing and mixing chambers, means to deliver a charge of oil into said mixing chamber, means to deliver a charge of air through said passage means, from said combustion space into said vaporizing and mixing chambers, means to inject said charge of oil and said charge of air through said passage means into said combustion space, and means to inject air thereafter into said combustion space through at least a portion of said passage means and said vaporizing chamber, whereby to clear the passage means and said chamber of oil.

8. In an oil engine, the combination of a cylinder and a piston operable therein, an injector plug having a discharge end formed of a separable hollow shell defining a vaporizing chamber, said end being positioned for subjection to the heat of combustion in the combustion space, a filler element removably positioned within said shell to partially fill said chamber, said injector having a mixing chamber, and passage means communicating with said vaporizing and mixing chambers, means to deliver a charge of oil into said mixing chamber, means to deliver a charge of air through said passage means, from said combustion space into said vaporizing and mixing chambers, means to inject said charge of oil and said charge of air through said passage means into said combustion space, means to inject air thereafter into said combustion space through at least a portion of said passage means and said vaporizing chamber, whereby to clear the passage means and said chamber of oil, said filler member being perforated and shaped to define conduits communicating with said passage means and to form a seat for said air injecting means.

9. In an oil engine, the combination of a cylinder and a piston operable therein, an injector having a discharge end subjected to the heat of combustion in the combustion space, an air chamber and a mixing chamber in said injector, passage means effective to establish communication between said chambers and said combustion space, means to deliver a charge of oil into said mixing chamber, means to deliver a charge of air through said passage means from said combustion space into said mixing chamber, a plunger movable through said mixing chamber to inject said charge of oil and said charge of air through said passage

means into said combustion space, a plunger movable through said air chamber to subsequently inject air into said combustion space through at least a portion of said passage means whereby to clear the passage means.

10. In an oil engine, the combination of a cylinder and a piston operable therein, an injector having a discharge end subjected to the heat of combustion in the combustion space, an air chamber and a mixing chamber in said injector, passage means effective to establish communication between said chambers and said combustion space, means to deliver a charge of oil into said mixing chamber, means to deliver a charge of air through said passage means from said combustion space into said mixing chamber, and into said air chamber, a pair of plungers respectively movable through said mixing and air chambers, means to move said plungers simultaneously whereby to inject said charge of oil and said charge of air through said passage means into said combustion space, said means being effective to thereafter continue actuation of the plunger in said air chamber, whereby to inject air into the combustion space through at least a portion of said passage means and thereby clear the passage means.

11. In an oil engine, the combination of a cylinder and a piston operable therein, an injector having a discharge end subjected to the heat of combustion in the combustion space, an air chamber and a mixing chamber in said injector, said air chamber being relatively larger than said mixing chamber, passage means effective to establish communication between said chambers and said combustion space, means to deliver a charge of oil into said mixing chamber, means to deliver a charge of air through said passage means from said combustion space into said mixing chamber, and into said air chamber a pair of plungers respectively movable through said mixing and air chambers, means to move said plungers simultaneously whereby to inject said charge of oil and said charge of air through said passage means into said combustion space, said means being effective to thereafter continue actuation of the plunger in said air chamber, whereby to inject air into the combustion space through at least a portion of said passage means and thereby clear the passage means.

WILLIAM M. BAUMHECKEL.