R. W. MENK.

DOWNDRAFT ATTACHMENT FOR FURNACES OR HEATERS.

APPLICATION FILED APR. 16, 1917.

1,291,590.

Patented Jan. 14, 1919.

2 SHEETS—SHEET 1.

Fig. 1.

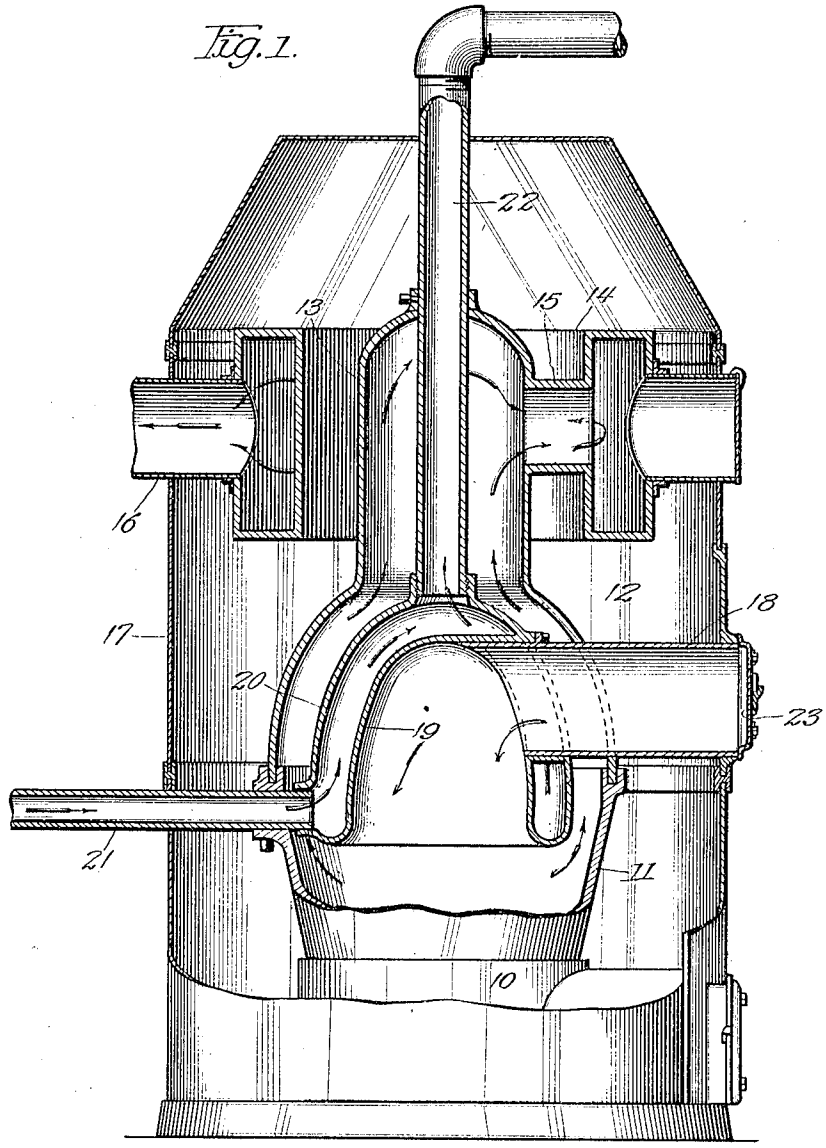

Inventor.
Rudolph W. Menk.
Benjamin, Roodhouse & Lundy
Attys.

THE NORRIS PETERS CO., PHOTO-LITHO., WASHINGTON, D. C.

R. W. MENK.

DOWNDRAFT ATTACHMENT FOR FURNACES OR HEATERS.

APPLICATION FILED APR. 16, 1917.

1,291,590.

Patented Jan. 14, 1919.

2 SHEETS—SHEET 2.

Fig. 2.

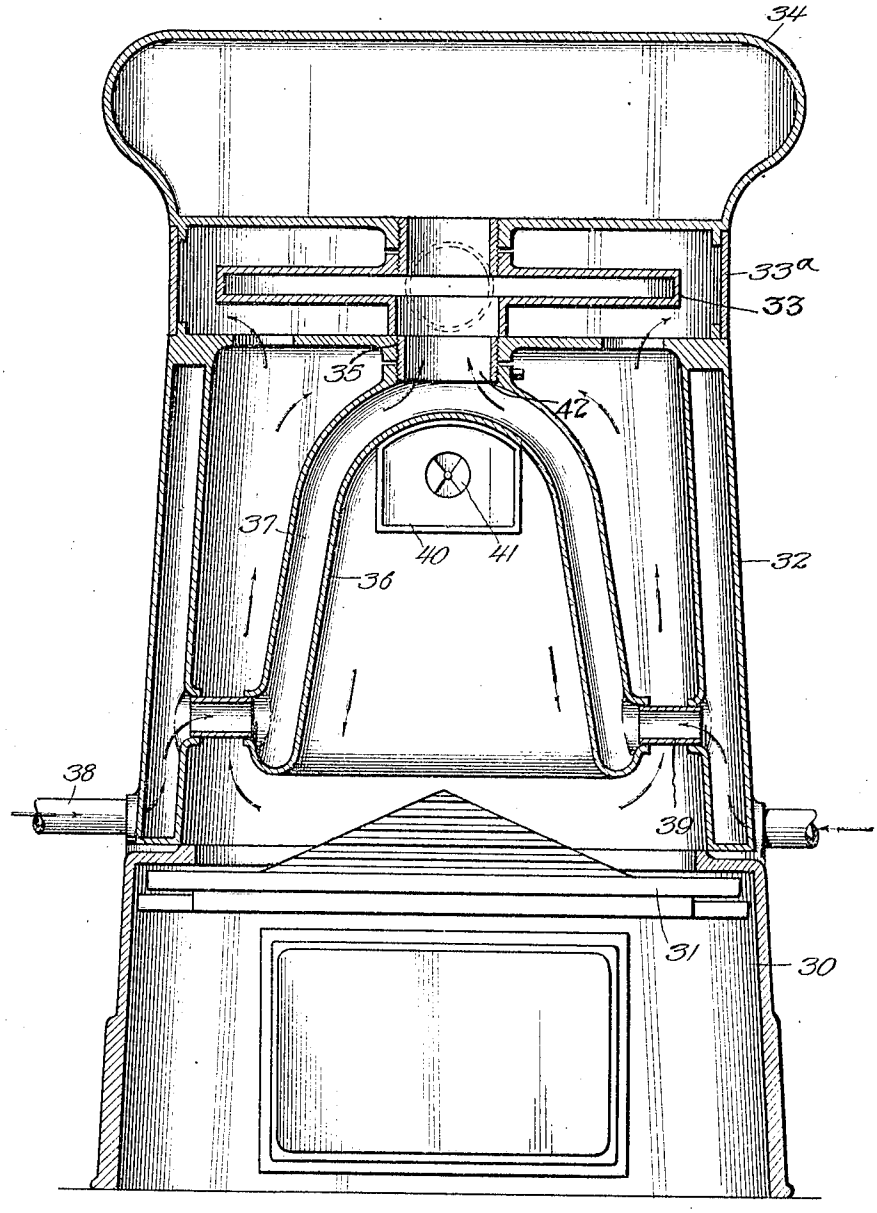

Inventor.
Rudolph W. Menk.
Benjamin, Roadhouse & Lundy.
Attys.

THE NORRIS PETERS CO., PHOTO-LITHO., WASHINGTON, D. C.

UNITED STATES PATENT OFFICE.

RUDOLPH W. MENK, OF CHICAGO, ILLINOIS, ASSIGNOR TO THE EXCELSIOR STEEL FURNACE COMPANY, OF CHICAGO, ILLINOIS, A CORPORATION OF ILLINOIS.

DOWNDRAFT ATTACHMENT FOR FURNACES OR HEATERS.

1,291,590. Specification of Letters Patent. **Patented Jan. 14, 1919.**

Application filed April 16, 1917. Serial No. 162,483.

To all whom it may concern:

Be it known that I, RUDOLPH W. MENK, a citizen of the United States, and a resident of the city of Chicago, county of Cook, and State of Illinois, have invented certain new and useful Improvements in Downdraft Attachments for Furnaces or Heaters, of which the following is a specification.

My invention relates to furnaces or heaters and more particularly to furnaces or heaters of the hot air and hot water types. It is the principal object of my invention to provide an attachment for a furnace or heater that will readily convert the same from an up-draft furnace into a downdraft furnace, without materially altering the construction of the furnace itself; and the further provision of a structure for accomplishing the aforesaid object, which is capable of adjustment so as to render it available for use in connection with different sizes and kinds of furnaces or heaters. It is also an object of my invention to provide a down-draft attachment for furnaces or heaters that is so constructed and its parts so arranged that the intense heat generated by the draft will not burn out or disintegrate the metal or other material of which the attachment is made. Other objects of my invention comprise the provision of a downdraft attachment that is simple in construction and economical to manufacture so that the expense of converting the furnace or heater into a down-draft device will not add materially to the final cost; to provide a down-draft attachment that is capable of ready and easy assembly with the parts of furnaces or heaters now on the market; and the provision of a down-draft attachment that is effective and dependable in its operation. Other objects will be obvious after an understanding of my invention is had.

I prefer to accomplish the divers objects of my invention by substantially the means and in the manner hereinafter fully described, and reference is hereby had to the accompanying drawings for an understanding of my invention, in which drawings,—

Figure 1 is a vertical central section of a furnace or heater of the hot air type, showing the application of my improved downdraft attachment thereto.

Fig. 2 is a view similar to Fig. 1, showing my improved down-draft attachment installed in a furnace or heater of the hot water type.

In Fig. 1 I have disclosed a hot air furnace or heater comprising the ash-pit 10 and combustion chamber consisting of the fire-pot 11, and dome 12, mounted upon one another in the usual manner. The upper portion of the combustion chamber or dome 12 extends upwardly to provide a chamber 13, and communicating therewith is an annular hollow radiator 14, disposed around the same and provided with a communicating passage 15. An exit passage 16 is provided in the outer wall of the radiator 14, and in the segment thereof opposite the passage 15 for the discharge of the products of combustion to the chimney. The heating elements above described are surrounded by the usual casing or shell 17 for the heating of the air to be distributed to the hot air conduits through the openings x in the bonnet. A fuel passageway extends from the front of the casing 17, through and into the combustion chamber or dome 12, as shown, so that fuel may be readily supplied to the grate between the fire-pot and ash-pit, and for convenience I prefer to employ a feed chute 18 for this purpose that is mounted so as to render the same capable of being readily employed in furnaces or heaters of divers types. In Fig. 1 of the drawing I have shown the outer opening of the feed chute closed by a suitable door provided with a damper 23.

My improved attachment for converting this heating element into a down-draft furnace heater comprises a hollow dome 19, that is disposed within said element in such position that it will be above the grate a suitable distance to permit proper combustion of the fuel when the furnace heater is operating on the down-draft principle. As shown, the dome 19 is hollow and is provided with a double wall so as to provide a chamber 20 inside the same, in which water or other suitable non-combustible fluid may be circulated to reduce the temperature thereof. It will also be observed that the outer wall of this dome is spaced a sufficient distance from the walls of the heating element to permit the circulation of the draft and the heated products of combustion between the same. At or adjacent the front portion of the furnace, a suitable opening is made through both walls of the

dome 19 to permit the feed chute 18 above mentioned, to be inserted therein. A water inlet pipe 21 is tapped into, preferably, the lower portion of the hollow shell forming the dome 19, so that water or other fluid may be supplied thereto, and an exit or outlet pipe 22 is connected to the upper portion of the outer wall of said dome, for the discharge and circulation of the fluid. The pipe 22 rises upwardly through the crown of the dome 13 and passes out of the furnace.

In Fig. 2 of the drawings I have shown my improved down-draft attachment applied to a hot water or steam furnace or heater, which comprises the usual ash-pit 30, above which the grate 31 is disposed, and having a water-jacketed combustion chamber member 32 mounted upon the ash-pit section. The usual water circulating and heating section 33 and flue section 33ª of annular horizontal section is mounted upon the jacket 32 and a holder 34 is conveniently mounted on the circular heating section 33. The section 33 is provided with a central opening 35, and my improved down-draft attachment is secured pendently therein by means of a nipple 42. As shown in Fig. 2, this attachment comprises a dome shaped member 36 of substantially the same construction as that disclosed in Fig. 1, having double walls to provide a passage 37 for the circulation of water and to prevent the burning out of the parts subject to the influence of the intense heat of the products of combustion. The usual supply pipe 38 is tapped into the lower portion of the water-jacket 32, which latter is connected by one or more short stubs 39, to the lower portion of the down-draft attachment or dome 36. The water entering the water-jacket 32 will be circulated in the usual manner through the heating elements and a portion of it will also circulate through the dome 36 and into the annular member 33 through the nipple 42 in the top of the dome, and, owing to the fact that this dome 36 is contiguous and in the zone of intense heat, the temperature of the water will be materially increased and the same will be heated more rapidly than in the ordinary type of water heater furnace. It will also be observed that the water will reduce the temperature of the down-draft dome and prevent the burning out or disintegration of the parts subject to the intense heat of the products of combustion. A fuel passageway 40 is provided adjacent the upper portion of the dome 36, so that the fuel may be supplied to the grate in the usual manner, and this passageway is similar in construction and capable of the same manner of adjustment as the tubular member 18 in the type of furnace illustrated in Fig. 1.

In both types of furnace or heater illustrated herein, the original path of the draft was up through the grate and the fuel, through the usual circulation chambers and out through the smoke flues. It will be observed, however, that with this attachment in position, the lower draft openings are kept closed and the dampers 23 and 41, respectively, (Figs. 1 and 2) are opened to permit the draft to enter into the upper portion of the dome and pass downwardly through the fuel around the lower edge or bottom of the dome and up into the combustion chamber and thence along the usual path to the smoke flues.

I have illustrated a specific manner of carrying out my invention, but I desire it understood that these drawings are merely diagrammatic for the purpose of illustrating the principle of carrying out my invention. It is quite obvious that changes and modifications may be made in the structure illustrated without materially departing from the principles involved, as, for example, a square or rectangular fire-pot may be employed in lieu of the type shown, and I therefore do not desire to be understood as limited to the precise construction and disposition of the parts shown and described.

What I claim as new is:—

1. The combination in a furnace including a combustion chamber having an opening for the introduction of fuel thereto, an ash pit and a grate interposed between the said ash pit and said combustion chamber, of a dome-shaped element adapted to be mounted within and in spaced relation with the inner walls and bottom of said combustion chamber and having communication with the fuel opening thereof whereby draft admitted through said fuel opening is directed downwardly through said dome-shaped element and upwardly around the exterior thereof.

2. The combination in a furnace including a combustion chamber having an opening for the introduction of fuel thereto, an ash pit and a grate interposed between the said ash pit and said combustion chamber, of a double wall dome-shaped element adapted to be mounted within and in spaced relation with the inner walls and bottom of said combustion chamber and having communication with the fuel opening thereof whereby draft admitted through said fuel opening is directed downwardly through said dome-shaped element and upwardly around the exterior thereof, and means for circulating water between the walls of said element.

3. An attachment for a furnace comprising an integral substantially dome-shaped member adapted to be mounted within the combustion chamber of a furnace and having in its upper portion communication with the opening in the combustion chamber for the introduction of fuel thereto and adapted to be suspended within the combustion

chamber of a furnace in spaced relation to the walls and bottom thereof.

4. An attachment for a furnace comprising an integral substantially dome-shaped double wall water-containing member adapted to be mounted within the combustion chamber of a furnace and having in its upper portion communication with the opening in the combustion chamber for the introduction of fuel thereto and adapted to be mounted within the combustion chamber of a furnace in spaced relation to the walls and bottom thereof.

Signed at Chicago, county of Cook and State of Illinois, this 14th day of April, 1917.

RUDOLPH W. MENK.

Witnesses:
E. K. LUNDY, Jr.,
BENJ. T. ROODHOUSE.

Copies of this patent may be obtained for five cents each, by addressing the "Commissioner of Patents, Washington, D. C."