No. 880,809. PATENTED MAR. 3, 1908.

J. T. MONCRIEF.

ADVERTISING DEVICE.

APPLICATION FILED SEPT. 30, 1907.

2 SHEETS—SHEET 1.

Fig. 1.

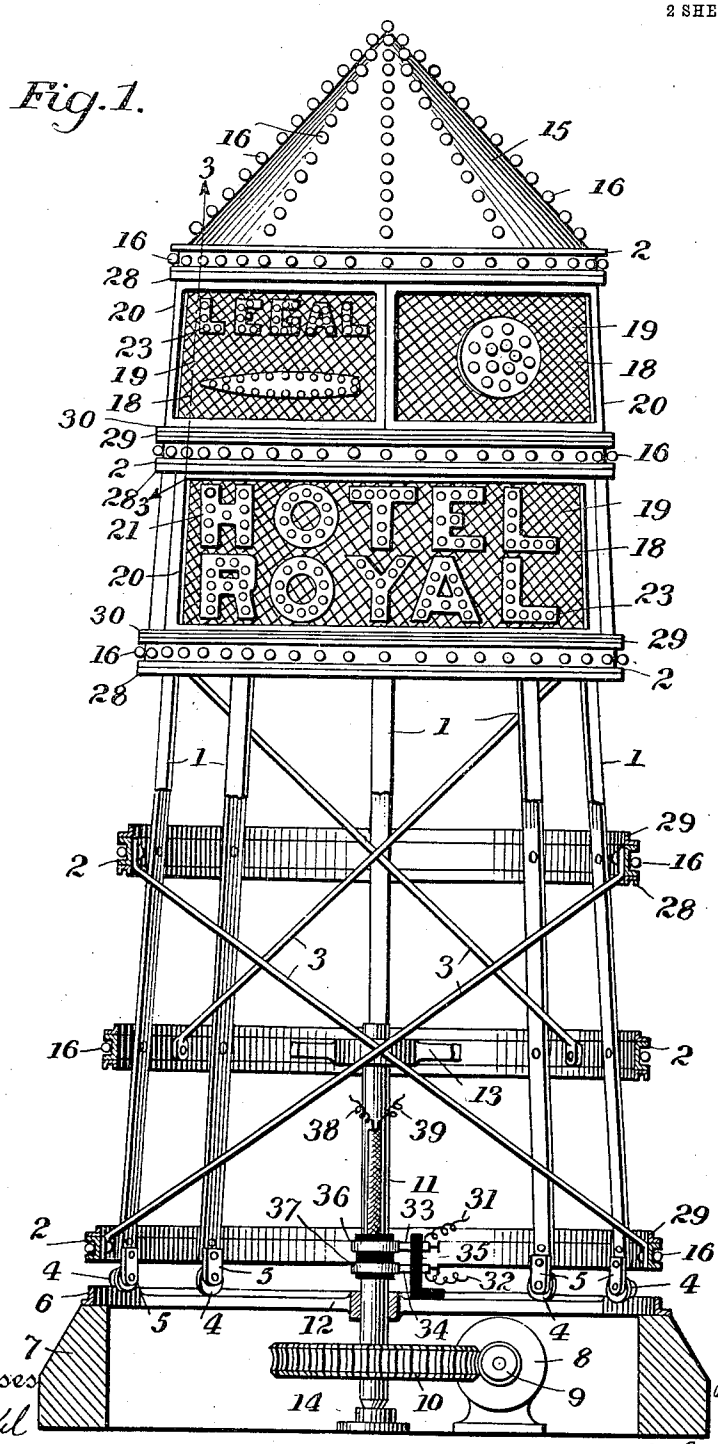

Witnesses
J. J. Stinkel
W. W. Chadwick.

Inventor
J. T. Moncrief

By John H. Holk
his Attorney

No. 880,809. PATENTED MAR. 3, 1908.

J. T. MONCRIEF.

ADVERTISING DEVICE.

APPLICATION FILED SEPT. 30, 1907.

2 SHEETS—SHEET 2.

Fig. 2.

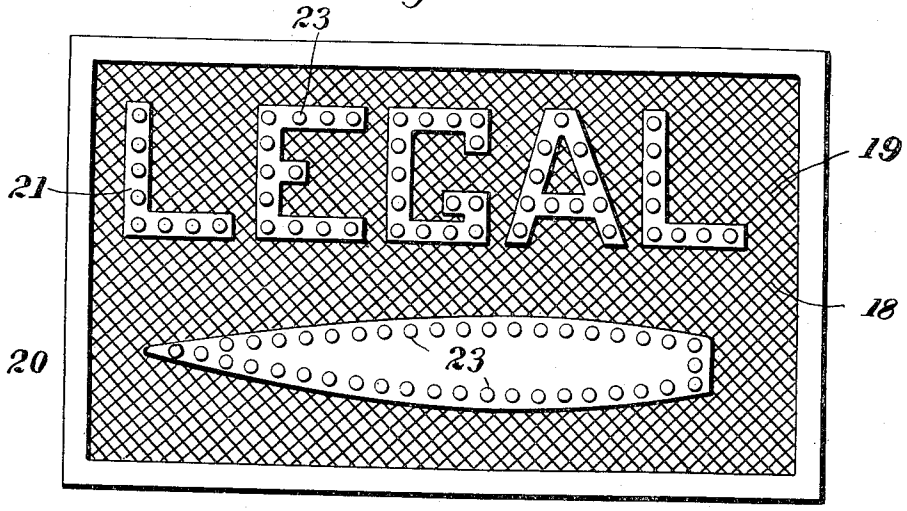

Fig. 3.

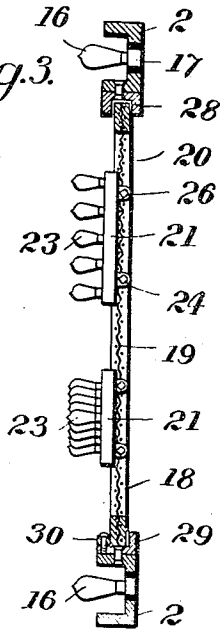

Fig. 4.

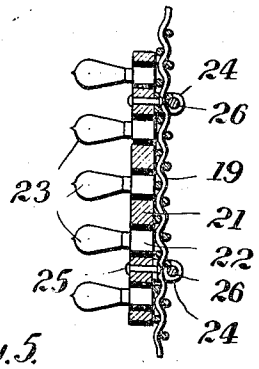

Fig. 5.

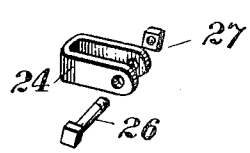

Witnesses

J. G. Hinkel

W. W. Chadwick

Inventor

J. T. Moncrief

By John H. Kolb

his Attorney

UNITED STATES PATENT OFFICE.

JOSEPH T. MONCRIEF, OF MONTGOMERY, ALABAMA.

ADVERTISING DEVICE.

No. 880,809. Specification of Letters Patent. Patented March 3, 1908.

Application filed September 30, 1907. Serial No. 395,081.

To all whom it may concern:

Be it known that I, JOSEPH T. MONCRIEF, a citizen of the United States, residing at Montgomery, in the county of Montgomery and State of Alabama, have invented certain new and useful Improvements in Advertising Devices, of which the following is a specification.

The primary object of this invention is the production of a structure which shall readily lend itself to the requirements of renting, leasing or selling space for display advertising, and more especially for illuminated display advertising; though except when specifically stated in the claims, I do not confine my said invention to illuminated advertising.

With the above object in view I construct a tower or other suitable supporting structure which is divided either vertically or horizontally or both into given spaces or areas, and provide removable units comprising independent frames carrying the advertising matter and adapted to fit into the above mentioned spaces.

For spaces of given areas, advertising units of corresponding areas are provided and kept on hand by the person letting out or selling the advertising space, and when a particular space or area is rented or sold, the required advertising matter is set upon a unit frame to fit the rented or sold space and placed in position on the supporting structure over said space.

When a given space is unrented or unsold, a unit frame for that space may be provided with an ornamental design and placed in position in said space to add to the attractiveness of the device. It will therefore be readily seen that such an arrangement lends itself to the varying demands for space in advertising and provides means whereby illuminated or other display advertising may partake of that flexibility which is afforded by newspapers.

The said invention consists further in the combination and arrangement of parts herein described and more particularly pointed out in the accompanying claims.

In order to more fully describe my said invention reference will be had to the accompanying drawings forming a part of this specification wherein,

Figure 1, represents partly in elevation and partly in section one form of apparatus embodying my invention; Fig. 2, a detail side elevation of one of the advertising units; Fig. 3, an enlarged section taken on line 3—3, Fig. 1; Fig. 4, an enlarged detail section through one of the letters and a portion of the supporting frame work, and Fig. 5, a detail perspective view of one of the letter holding devices.

In the form of my invention shown in the accompanying drawings the supporting structure for the advertising units consists of a tower frame-work, comprising a plurality of properly spaced ribs 1, of any suitable material to the exterior of which are made fast in any suitable way a series of rings 2 spaced apart longitudinally of said ribs at suitable intervals. The structure thus formed is preferably stayed by brace rods 3 or in any other suitable manner.

When it is desired that the tower shall be rotatable, this frame is supported upon a plurality of flanged rollers 4 secured in any suitable way, as by brackets 5, to the lower portion of the tower frame These rollers are adapted to travel on a circular track 6 mounted on a suitable concrete or other foundation 7.

Rotary motion may be imparted to said tower in any suitable way. The means which I have shown for accomplishing this comprises an electric motor 8, mounted in the base of the tower and connected through worm 9 and gear 10, or otherwise, to drive a shaft 11, which passes upwards in line with the axis of the tower through the fixed spider 12 to the spider 13, which latter is fixed to the said shaft and to one of the rings 2 of the tower frame. The lower end of shaft 11 is mounted in bearing 14.

Upon the upper end of the tower frame may be placed any desired cap or design. In the drawings I have shown the top of said frame terminating in a cone shaped cap which may consist of sheet metal or other material. Upon this cap electric lamps 16 may be placed and arranged in any desired order. Similar lamps may be placed around on the outside of rings 2 which may be provided with lamp sockets 17 for that purpose.

Lamps 16 are purely for ornamental purposes and preferably remain fixed.

The advertising units comprise each, in the case shown, netting 19 of wire or open work of other suitable material supported by a suitable frame 20.

The netting 19 forms a support to which letters, figures or designs of any desired char-

acter may be attached. In the accompanying drawings I have shown these as illuminated, consisting of letter, figure or design blocks 21 in which are mounted in any desired way suitable lamp sockets 22 to receive incandescent lamps 23.

I do not claim as a part of my present invention any specific form of illuminated letter, or design; hence it will not be necessary to go further into the details of the construction of these here.

The devices which I have shown herein for securing the letters, figures or designs to their support consist each of a small metal clip 24 made fast as by bolts 25 to the letters, figures or designs, and adapted to pass through the meshes in said netting. The clips are held in this position by means of bolts and nuts 26 and 27, as shown.

The frames of the advertising units are held in position at the top by means of channel rings 28 into which the top of each of said units extends, as shown most clearly in Fig. 3. The bottom portion of each unit frame rests upon an angle ring 29 one of which is made fast to the top of each of the rings 2 except the uppermost of rings 2 which is provided with a channel ring 28 only. The unit frames are held in place in said angle rings 29 by means of retaining strips 30, made fast to the angle rings as shown. See Fig. 3. It will therefore be seen that the advertising units may be readily placed in position on the tower frame and removed therefrom.

The unit shown in the extreme upper left hand corner of the tower, Fig. 1, indicates a space which is not occupied by advertising matter, or an unrented or unsold space, in which case the unit may be provided with any desired design. These units may be of various sizes to correspond to various areas which may be desired for advertising, for example, the entire space between two adjacent rings 2 may be devoted to one advertisement in which case there would be but one unit for that space. The tower also may be of any desired shape or size, and when very large an open construction such as shown will greatly reduce the liability of said tower to be blown down. These towers may be constructed on a large scale, 50 feet or more in height and when supplied with illuminated advertising matter will readily attract attention. Moreover, their ornamental quality will make them acceptable in places where ordinary advertising matter would probably be distasteful.

When the tower is illuminated electrically, current from feed wires 31, 32 may be lead to brushes 33, 34 mounted in an insulating support 35 suitably secured to the spider 12, and the brushes 33, 34 made to engage respectively two collector rings 36, 37 mounted on and insulated from the shaft 11. From these collector rings lead the two conductors 38, 39 from which current is supplied to the various lamps.

The electrical connections and wiring necessary to light the lamps, when electricity is employed for the purpose of illumination, forms no part of the present invention and therefore may be accomplished in any suitable way. Moreover, I do not limit my invention to electrically illuminated letters or designs since other forms of illumination may be employed.

Having thus described a form of my said invention, what I claim is:

In an advertising device, an advertising unit comprising a plurality of electric lamps arranged to form letters, supporting means in which said lamps are mounted, wire netting, means to removably secure the supporting means in which said lamps are mounted to said wire netting, a frame surrounding and supporting said netting, in combination with a supporting structure comprising a tower frame divided into sections adapted each to receive one or more of said units.

In testimony whereof I have affixed my signature in presence of two witnesses.

JOSEPH T. MONCRIEF.

Witnesses:

ROBT. G. ARRINGTON,

J. T. LETCHER.