June 8, 1965 S. J. ZIMMET 3,187,926

NON-TAMPERABLE CONTAINER

Filed Nov. 29, 1961 2 Sheets-Sheet 1

FIG. 1.

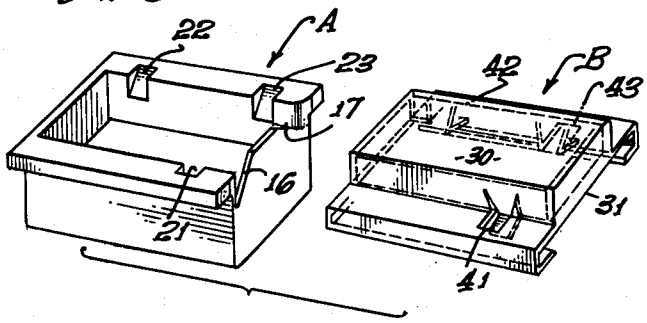

FIG. 5.

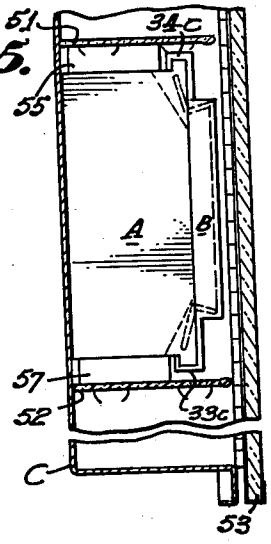

FIG. 2.

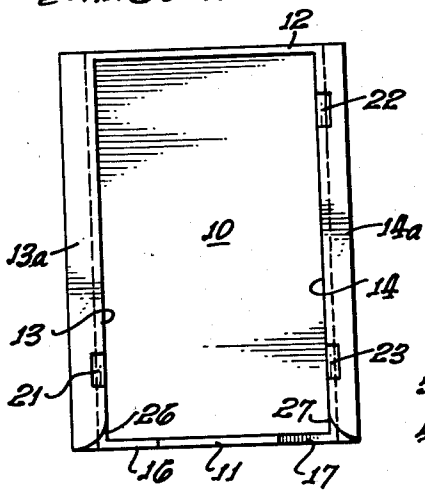

FIG. 4.

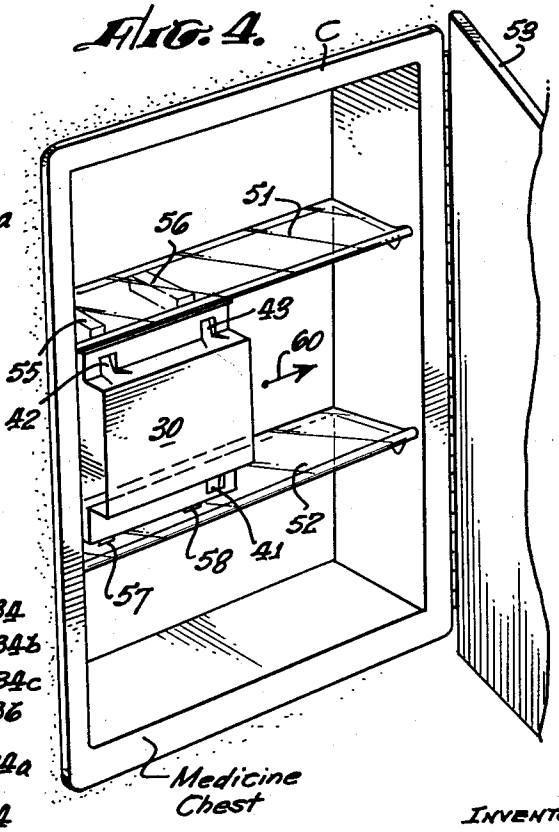

FIG. 3.

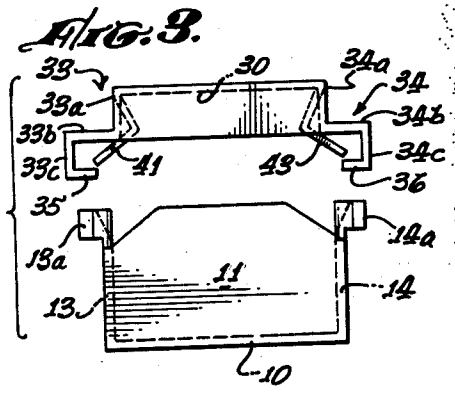

INVENTOR.
SYDNEY J. ZIMMET,
By Nilsson & Robbins.
ATTORNEYS.

June 8, 1965 S. J. ZIMMET 3,187,926

NON-TAMPERABLE CONTAINER

Filed Nov. 29, 1961 2 Sheets-Sheet 2

FIG. 6.

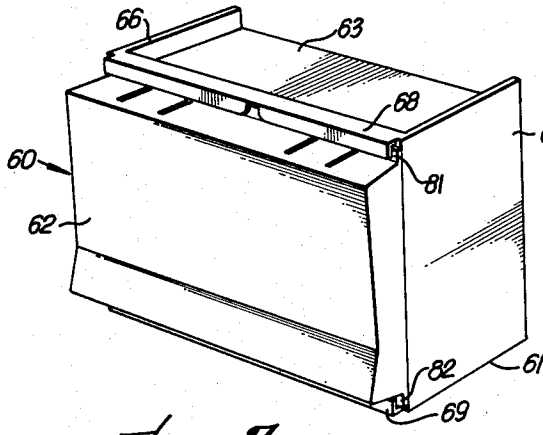

FIG. 8.

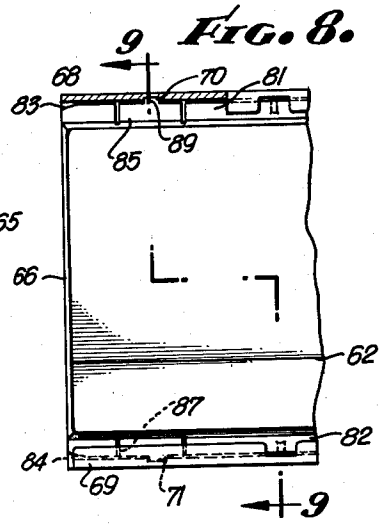

FIG. 7.

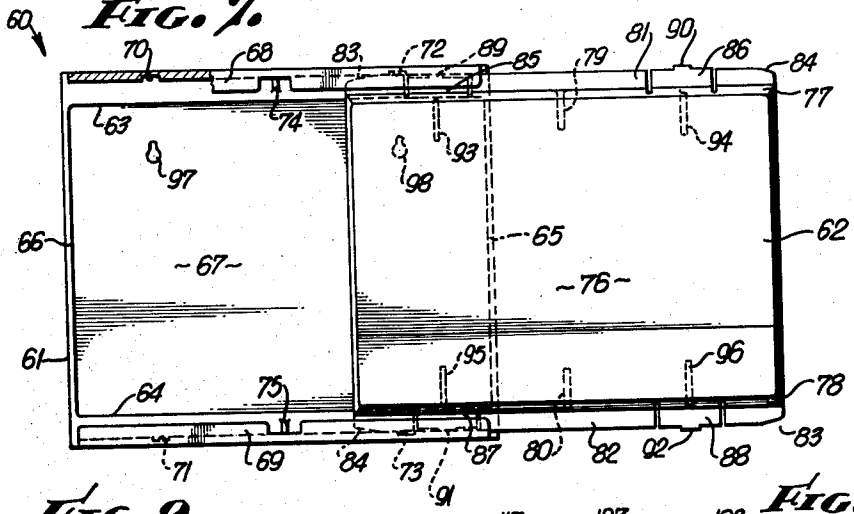

FIG. 9.

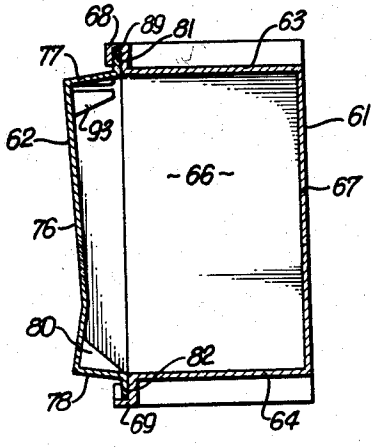

FIG. 10.

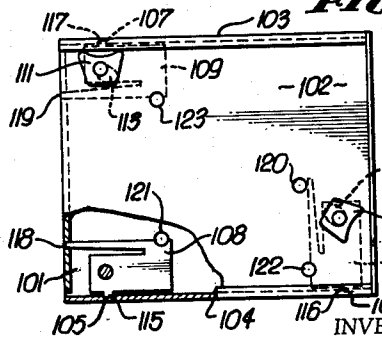

INVENTOR.

SIDNEY J. ZIMMET

BY

Nilsson & Robbins

ATTORNEYS.

United States Patent Office 3,187,926 Patented June 8, 1965

3,187,926

NON-TAMPERABLE CONTAINER

Sidney J. Zimmet, 2312 Hill Lane, Redondo Beach, Calif.

Filed Nov. 29, 1961, Ser. No. 157,043
5 Claims. (Cl. 220—41)

This invention relates generally to non-tamperable containers, and more particularly to such a container including a box and a lid, the lid having latch mechanisms thereon.

This application is a continuation in part application of Serial No. 50,925 filed August 22, 1960 by Sidney J. Zimmet for Non-Tamperable Container.

For many household purposes, it is desirable to have a container which children cannot open, but which nevertheless can be opened by an adult through the concurrent use of both hands. One such household purpose, for example, is to provide a locked container in which drugs and medicines may be kept. Such a drug container may, if desired, be secured in a permanent position within a medicine cabinet.

Prior art containers having locking means for retaining the cover in place have been complicated and expensive to manufacture, and have not provided a lock which is designed to prevent children's access to the contents of the container.

Accordingly, it is an object of the present invention to provide a container which cannot be opened by children, but which may be readily manipulated by adults.

It is another object of the present invention to provide a non-tamperable container which may be manufactured at a minimum cost.

In is another object of the present invention to provide a non-tamperable container which is particularly adapted for use as a medicine box.

Additional objects and advantages of the present invention, both as to its organization and operation, will become apparent from a consideration of the following description taken in conjunction with the accompanying drawings which are presented by way of example only and are not intended at a limination upon the scope of the claims appended to here, and in which:

FIG. 1 is a perspective view of the box and lid of one embodiment of the present invention;

FIG. 2 is a plan view of the box as illustrated in FIG. 1;

FIG. 3 is an end view of the box and lid as illustrated in FIG. 1;

FIGS. 4 and 5 illustrate the box of FIGS. 1, 2, and 3 mounted in a medicine cabinet;

FIG. 6 is a perspective view of an alternative preferred embodiment of a box and lid in accordance with the present invention;

FIG. 7 is a top elevational view of the box and lid of FIG. 6 with the lid partially removed from the box and with the box partially in cross-section;

FIG. 8 is a fragmentary top elevational view, partly in cross-section, of the box and lid of FIG. 6 with the lid in place;

FIG. 9 is a cross-sectional view of the box and lid taken about the lines 9—9 shown in FIG. 8; and

FIG. 10 is a top elevational view, partly in cross-section, of another embodiment of a box and lid in accordance with the present invention.

A container in accordance with the present invention includes a box having side walls defining members for slidably receiving a lid. The lid carries a latch on at least one side edge thereof. The latch engages a retaining means formed in the receiving members for retaining the lid in place, and the latch includes retractable resilient means to normally cause the latch to be urged toward the retaining means.

Referring now to the drawings, and more particularly to FIGS. 1 through 3, there is illustrated one embodiment of a non-tamperable container in accordance with the present invention. As is illustrated generally therein, the box is substantially rectangular in shape having one end wall whose upper corners are of lesser height than the side walls. Retaining notches for the latch mechanisms are formed on the inner surfaces of the side walls. As is noted, the upper edges of the side walls are flanged outwardly to provide a receiving means for the lid to be described below. One of the retaining notches is formed on one side wall near the upper edge thereof, and two retaining notches are formed in longitudinally spaced positions on the other side at its upper edge. Additional notches may be used is desired. It is preferred, but not indispensable, that one retaining notch on each side of the box should be at the same longitudinal position as the retaining notch on the other side.

In accordance with the present embodiment of this invention, the lid is integrally formed and has downwardly depending edge walls which slidingly engage the outer surfaces of the side walls of the box which form the receiving means above referred to. Portions of the edge walls are partially cut out and bent inwardly, so as to extend inside the box when the lid is fitted on the box. The position of these cut-out portions is such that each engages selectively a respective one of the retaining notches in the box.

Further in accordance with the present embodiment of this invention, securing means are also provided so that in removing or replacing the lid upon the box the lid slides longintudinally relative to the box. Thus, when the lid is removed from the box, the partially cut-out lid portions pass over the upper corners of one end wall of the box in the area below the side wall upper edges.

As is more specifically illustrated in the drawings, the non-tamperable container in accordance with the present embodiment of this invention includes a box A and a lid B. The box A has a flat bottom **10**, end walls **11** and **12**, and side walls **13**, **14**. End wall **11** has its upper corners cut away at **16**, **17**, so as to be of lesser height than the side walls. A retaining notch **21** is formed in side wall **13**, in the inner surface thereof and near its upper edge. Retaining notches **22**, **23** are similarly formed in the side wall **14**. Notches **22**, **23** are longitudinally separated on the side wall **14**, and notches **21**, **23** are located at the same longitudinal position on the box.

Additional features of the box construction include outwardly extending flanges **13***a*, **14***a*, formed on the upper edges of side walls **13**, **14**, respectively. The side wall **13** is rounded at **26**, adjacent end wall **11**, and the side wall **14** is similarly rounded at **27**, so as to facilitate the insertion or removal of the lid.

Lid B includes a flat top portion **30** and downwardly depending end portions **31**, **32**. Downwardly depending edge walls **33**, **34** have a stepped configuration. Thus the edge wall **33** has a portion **33***a* which extends downwardly in adjoinment with the end portions **31**, **32**. Edge wall **33** also includes a portion **33***b* which extends horizontally outwardly from the portion **33***a*, and a portion **33***c* which extends downwardly from the extremity of the portion **33***b*. Inwardly extending flanges **35**, **36** are formed on the lower edges of respective edge walls of the lid.

Edge wall **33** of the lid has a cutout portion **41**, while edge wall **34** has cutout portions **42**, **43**. The cutout portions **41**, **42**, **43** are adapted to engage retaining notches **21**, **22**, **23**, respectively.

Each cutout portion is formed by cutting a tab from the horizontal portion **33***b* or **34***b*, of the associated edge wall. The cutting out of the tab is also extending upwardly into the downwardly depending wall portion **33***a* or **34***a*.

The tabs or cutout portions of the lid are then bent in-

wardly to serve as latch mechanisms. It is preferred to use resilient plastic material for fabricating the lid, such that the tabs after being retracted tend to restore themselves toward their original positions, and therefore normally automatically are urged forward into the respective retaining notches. It is convenient to press the tabs 41 and 43 together with the thumb and a finger of one hand while concurrently pressing tab 42 with a finger of the other hand to thus retract the tabs from engagement with the notches when it is desired to remove the lid from the box.

FIGS. 4 and 5 illustrate a modified form of the invention adapted for permanent mounting in a household medicine chest. A medicine cabinet C has horizontal shelves 51, 52 and a hinged door 53. A pair of runners or mounting blocks 55, 56 are attached to side wall 14 of box A and a similar pair of runners or blocks 57, 58 are attached to side wall 13. The runners are mounted in a transverse direction on the respective side walls, perpendicular to the box bottom 10 and lid top 30.

The width or thickness of the runners measured in a direction parallel to end walls 11, 12, is greater than the distance by which the lid edges 33c, 34c overhang the side walls of the box. As shown in FIG. 4 the box is mounted with the runners 55, 56 engaging the under surface of upper shelf 51 while the runners 57, 58 engage the upper surface of lower shelf 52. The runners are permanently fastened to the shelves by adhesives or other suitable means. The upper edge 34c and lower edge 33c of the lid therefore maintain a slight clearance from shelves 51 and 52, respectively, and the lid is adapted to be removed by sliding it horizontally to the right, as indicated by an arrow 60.

The runners 55–58 may be formed separately and then attached to box A, but it is preferred to form them of plastic material as an integral part of the box.

Referring now more particularly to FIGS. 6 through 9, there is illustrated a preferred embodiment in accordance with the present invention. As is shown therein, the non-tamperable container illustrated generally at 60 includes a box 61 which has a lid 62 in slidable engagement therewith. The box 61 includes side walls 63, 64 and end walls 65, 66 and a bottom 67. Along the upper edge portion of each of the side walls 63, 64 there is formed a U-shaped flange member 68, 69, respectively. The U-shaped flange members may be viewed as extensions of side walls 63 and 64 which are turned outwardly, upwardly and then inwardly in order to provide a pair of interior longitudinally disposed grooves or channels within which the lid 62 slides. Along the inner surface of the U-shaped flange 68 there is provided a pair of openings in the form of detents 70, 72 while along the inner surface of the U-shaped flange member 69 there is provided a pair of such detents 71, 73. Disposed centrally of each of the U-shaped flange members 68, 69 there is provided a reinforcing or stiffening rib 74, 75 respectively.

The lid 62 is formed of a relatively flat top 76 having downwardly depending edge members 77 and 78. Formed integrally with the top and downwardly depending side edges of the lid are reinforcing ribs 79 and 80. The terminal portion of the side edges 77 and 78 of the lid 62 are turned outwardly to form flanges 81, 82, respectively. The end areas of the flanges 81 and 82 are tapered inwardly as shown respectively at 83 and 84 to permit easy insertion of the lid into the grooves provided by the U-shaped flange members 68 and 69. Taps 85, 86, 87, and 88 are provided along the side edges of the lid 62 to provide a plurality of latch members carried by the lid. The tabs 85 and 86 are longitudinally spaced along the side edge 77 and flange 81 while the tabs 87 and 88 are provided along the opposite side edge 78 and flange 82. The tabs 85 through 88 are provided by cutting through the flanges 81, 82 and part way through the side edges 77 and 78 of the lid 62. Each of the tabs is provided at its center portion with an outwardly extending latch finger

89, 90, 91, and 92. The lid 62 is preferably formed of resiliently deformable plastic material which is relatively rigid and which causes each of the tabs 85 through 88 to normally be urged outwardly to the position as illustrated by tabs 86 and 88 of FIG. 7. Each of the tabs is adapted to selectively engage a respective one of the detents 70 through 73. For example, when the lid is in its closed position as illustrated in FIG. 6, each of the latches 89 through 92 respectively engages the detents 70 through 73 thus causing the lid 62 to be locked in place upon the box 61.

This is more clearly illustrated in FIG. 8 wherein the latch 89 is shown inserted into detent 70 which is formed along the inner edge surface of the U-shaped flange member 68.

In operation, the lid is removed from the box 61 by pressing inwardly upon each of the longitudinally spaced tabs 85 through 88 simultaneously and moving the lid either to the left or to the right as viewed in FIG. 6. As is clearly shown in FIGS. 7 and 9, a stop member 93 through 96 cooperates with a protrusion formed upon the inner surface of the tabs 85 through 88, respectively, to thereby prevent the tabs from being displaced so far inwardly as to destroy the resiliency of the material or to otherwise permanently deform the tabs.

Openings 97 and 98 as shown in FIG. 7 are provided so that the non-tamperable container 60 may be mounted upon a wall within a medicine chest or similar area.

Referring now more particularly to FIG. 10, there is illustrated another embodiment in accordance with the present invention. As is therein shown, a container includes a box 101 having a lid 102 slidably engaging the side edges of the box 103 and 104, each of which defines a recess or groove for that purpose. Along the inner edge of the inner surface of the side 104 there is provided retaining means such as a pair of openings or detents 105 and 106. On the opposite side wall 103 there is provided along the inner surface thereof a detent 107 which is oppositely disposed from detent 105. Carried by the lid 102 are three generally U-shaped resiliently deformable latch members 108, 109, and 110. Protruding through the lid 102 are latch actuation members or handles 111 and 112, the latch actuating member which operates in conjunction with the U-shaped latch member 108 not being shown. The latch members 108, 109, and 110 carry latch fingers 115, 116, and 117 respectively. The latch actuation members 111 and 112 are movable within openings 113 and 114, respectively in such a manner as to cause the legs of the generally U-shaped member to be brought closer together and thereby to remove the latches 115, 116, and 117 from engagement with the detents 105, 106, and 107, respectively. One leg of the generally U-shaped latch members 108, 109, and 110 is anchored as at 118, 119, and 120, respectively. A stop member is provided for each of the latch members as is illustrated at 121, 122, and 123. In this manner, there is provided a resilient retractable latch mechanism which is normally urging a latch finger forwardly and into engagement with a retaining means such as the detents 105 through 107. Upon depression, the latch fingers are withdrawn from the detents and the lid may be removed from the box to provide access thereto.

There has thus been disclosed the details of several embodiments of a non-tamperable container in accordance with the present invention each of which is relatively simple and inexpensive to manufacture and cannot be opened by a child but at the same time may be opened by manipulation of an adult.

What is claimed is:

1. A container comprising: a box having upstanding sidewalls each defining a longitudinally extending groove on the inner surface thereof near the upper edge, each of said grooves defining at least one opening therein; a lid formed of relatively rigid material and having longitudinally extending side walls, said lid being formed to slid-

ingly engage said grooves; latch means carried on said side walls of said lid and having a latch finger for engaging said openings, said latch means including a resilient means for normally urging said latch finger toward said opening.

2. A container as defined in claim 1 in which said side edges of said lid terminate in outwardly extending flanges which are received in said grooves and said latch members are formed by partially cutting out portions of said flanges and said side edges of said lid.

3. A container as defined in claim 2 in which said lid includes stop means affixed to the inner surface of the top of said lid and extending downwardly therefrom adjacent said latch members thereby to limit the inward movement of said latch members.

4. A container comprising: a box having upstanding side walls each defining a longitudinally extending groove on the inner surface thereof near the upper edge, each of said grooves defining a pair of equally spaced openings therein; a lid of relatively rigid material having a top, downwardly depending side walls and outwardly extending longitudinal flanges; two latches formed integrally with each of said flanges and spaced equally thereon to coincide with said openings when said lid is in a closed position on said box, said latches being formed by partially cutting out a portion of said flanges and the longitudinally disposed side walls of said lid, said lid being formed of resiliently deformable material thereby to cause said latches to normally be urged toward engagement with said openings.

5. A container including a box having longitudinal interior grooves in its side walls; a lid formed of relatively rigid sheet material and having longitudinal side flanges adapted to slide in said grooves, the width of said grooves being sufficient to accommodate said side flanges; and a latch carried on the surface of one of said side flanges and having a latch finger extending from said one side flange in a direction substantially parallel to the main lid portion for selectively engaging retaining means in the corresponding side wall groove of the box.

References Cited by the Examiner

UNITED STATES PATENTS

476,353	6/92	Allred	220—41
1,761,650	6/30	Beardsley.	
2,562,248	7/51	Weed	220—41
2,906,579	9/59	Magnenat	220—60
2,936,189	5/60	Pearson	206—1.5

THERON E. CONDON, *Primary Examiner.*

EARLE J. DRUMMOND, *Examiner.*