M. SHERAS.

TIME STAMP.

APPLICATION FILED AUG. 4, 1917.

1,430,031.

Patented Sept. 26, 1922.

2 SHEETS—SHEET 1.

Fig. 1.

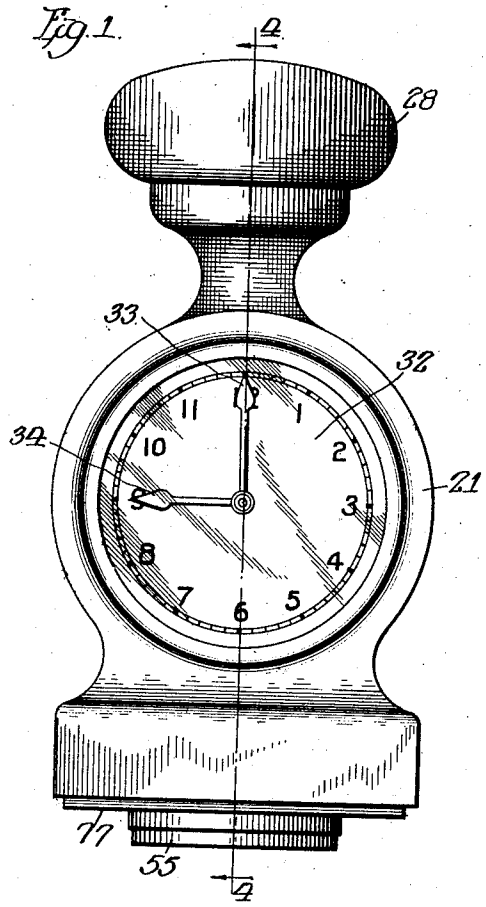

Fig. 2.

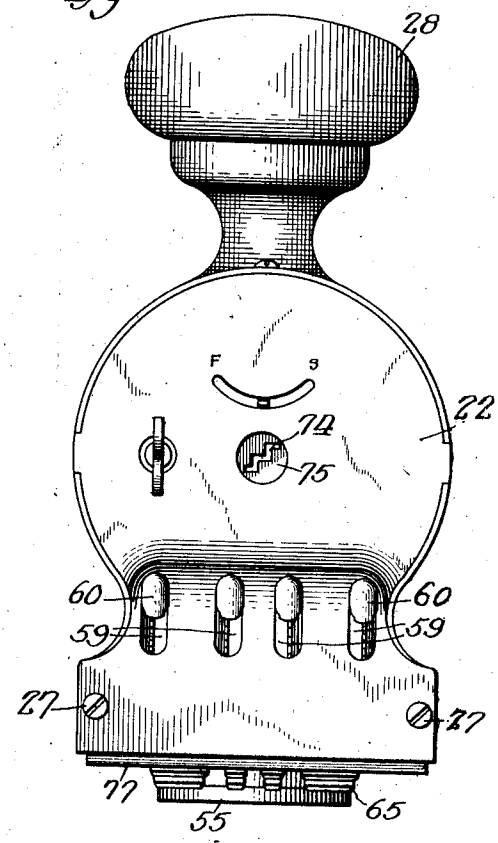

Fig. 3.

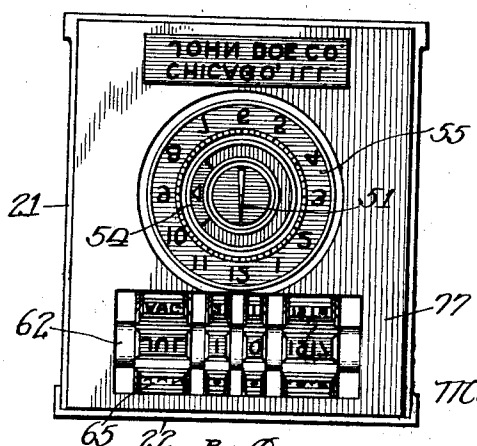

Witness:
C. N. Roessner.

Inventor.
Morris Sheras.
By Cromwell Gleis & Wade.
Atty

M. SHERAS.

TIME STAMP.

APPLICATION FILED AUG. 4, 1917.

1,430,031.

Patented Sept. 26, 1922.

2 SHEETS—SHEET 2.

Fig. 4.

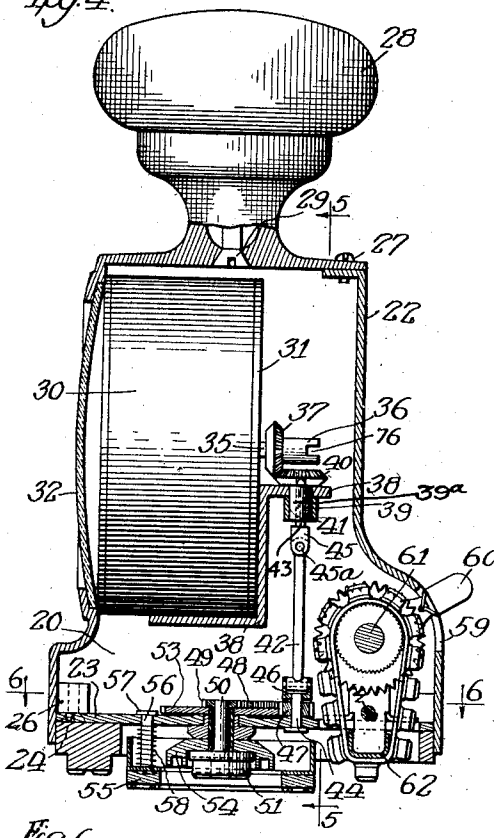

Fig. 5.

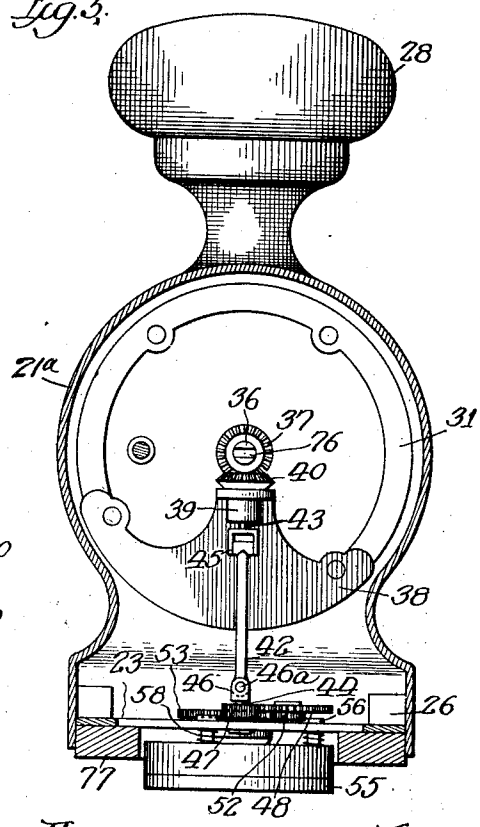

Fig. 6.

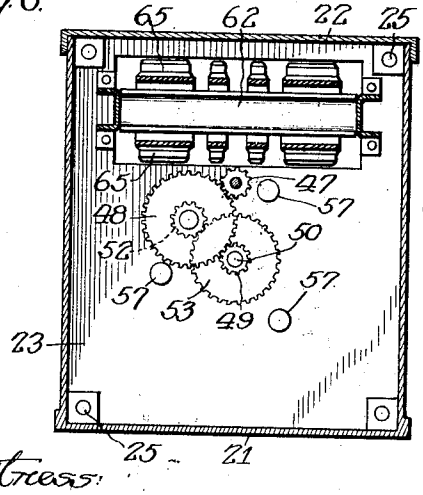

Fig. 7.

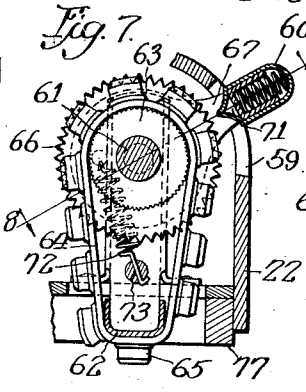

Fig. 8.

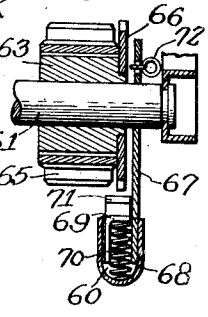

Witness:
E. H. Roessner.

Inventor.
Morris Sheras.
By Cromwell Greist & Warden
Attys.

Patented Sept. 26, 1922. 1,430,031

UNITED STATES PATENT OFFICE.

MORRIS SHERAS, OF CHICAGO, ILLINOIS, ASSIGNOR TO MICHAEL GESAS, TRUSTEE, OF CHICAGO, ILLINOIS.

TIME STAMP.

Application filed August 4, 1917. Serial No. 184,398.

To all whom it may concern:

Be it known that I, MORRIS SHERAS, a citizen of the United States, residing at Chicago, in the county of Cook and State of Illinois, have invented certain new and useful Improvements in Time Stamps, of which the following is a specification.

My invention relates to improvements in time stamps, by which is provided a simple though serviceable and complete recording device for indicating the time or receipt of mail, and other deliveries.

Among the objects of the invention is the provision of means for dispersing the shock attendant upon its use, thereby relieving the motor parts of jars, vibration and binding. Another feature is the incorporation of a date recorder of the band type, and the provision of novel means for adjusting it to bring selected portions into position for registry.

A further object of the invention is to so mount the hour and minute impression members that they will be free to rotate in normal position without retarding the clock movement and without causing undue strain thereon.

Other advantages in the construction and assemblage will be noted as the specification proceeds to describe in detail the structure illustrated in the accompanying drawings.

In the drawings—

Fig. 1 is a front elevation of the time stamp which displays any ordinary clock dial and hands;

Fig. 2 is a rear view;

Fig. 3 shows the association of the impression members at the bottom or impression face of the device;

Fig. 4 is a vertical section through the line 4—4 of Fig. 1;

Fig. 5 is a sectional view through the line 5—5 of Fig. 4;

Fig. 6 is a transverse horizontal section through the line 6—6 of Fig. 4;

Fig. 7 is a detail on the band dater and its adjusting attachment; and

Fig. 8 is in section along the line 8—8 of Fig. 7.

In the drawings, reference numeral 20 indicates generally an outer metallic casing which contains the operative parts of the time stamp. Said casing is made up of front face 21 and side walls 21ª, preferably integral, rear wall 22 and bottom plate 23. The casing is artistically designed, the front face 21 providing for the display of the hands and dial of the clock movement and adapting the time stamp to serve as a desk or shelf clock. The members 21ª, 22 and 23 are fastened together by screws 24 extending through apertures 25 in plate 23 and engaging lugs 26 on members 21ª, and by screws 27 which pass through aligned threaded openings in overlapped portions of members 21ª and 22, as shown in Fig. 4. The handle 28 which may be of wood, rubber or composition is joined to the casing by means of screw 29. An horological motor, with the usual train of gears is enclosed within the casing and is marked 30. Except for the indication of the minute arbor of said clock movement no detail of the motor parts nor of their operation will be given, as these are ordinary and are well understood.

31 represents the rear frame member which carries the clock movement 30, and 32 the clock dial with minute and hour hands 33 and 34. The minute arbor 35 is extended rearwardly through the frame member 31 and enters and operates a sleeve 36 provided with gear 37. Attached to the frame 31 is a bracket member 38 which carries within the collar 39 the short sleeve shaft 39ª upon which is mounted gear 40. The gears 37 and 40 are in mesh and are designed to rotate the shaft 39 synchronously with the minute arbor 35 of the clock movement. Said shaft 39ª is provided longitudinally with a rectangular bore 41.

The upper end 43 of the rod 42 is rectangular in cross section, its sides engaging and tightly fitting the walls of the bore 41 causing rotation of the rod by shaft 39ª. Said rod is designed so that it will compensate for the shocks and jars incident to use of the stamp and will prevent jamming or binding at the connections between the rod and shaft 39ª and between the rod and the impression dial train. To this end, rod 42 is divided into three parts, the upper end 43 and the lower end 44 being joined to the intermediate portion by means of pivotal U-shaped bracket members 45, 46, said bracket members being fulcrumed at 45ª and 46ª and being arranged to rock or swing in directions at right angles to each other. It is now evident that if the rod 42 is subjected to some extraordinary and distorting influ-

ence such for instance as the bending of plate 23, a common occurrence, it will take up such distortion through the joints between the outer and intermediate portions rather than bending and binding at its extremities, and by reason of the arrangement of said joints it will nevertheless continue to transmit motion from the motor. The lower end 44 of rod 42 carries pinion 47 which meshes with gear 48, the latter in turn meshing with pinion 49 on the arbor 50 of the minute indicator impression member 51. The gears 37, 40 and 48 and pinions 47 and 49 have the requisite number of teeth in relation with each other, so as to revolve the member 51 simultaneously and in time with the minute hand 33 on the arbor 35. Pinion 52 and gear 53 form a reduction gearing for driving the hour indicator impression member 54 at the proper ratio of speed with respect to member 51. I have used for illustration a 12 hour dial so that the ratio would be 1 to 12.

It would of course be possible to rearrange the parts and mount the member 51 directly upon rod 42, but the indirect driving through gear 48 eliminates binding in the impression dial train.

Impression members 51 and 54 cooperate in denoting the time, with the stationary impression dial 55 which is yieldingly carried at the bottom of plate 23, by upstanding headed posts 56 slidable in apertures 57 in said plate.

Surrounding the posts 56 and disposed between the top of dial 55 and the bottom of plate 23 are springs 58 of sufficient resistance to support the weight of the superposed parts of the stamp but elastic enough to yield to the pressure ordinarily employed in stamping the impression. Under such pressure the dial 55 will recede by forcing the posts up through the plate 23 until the bottom face of said dial lies in the same plane as indicators 51 and 54, at which point the latter will register their impressions. Upon release of the pressure the springs 58 which have been compressed, will return the parts to normal position, that is to say, the rotating impression members 51 and 54 will be immediately withdrawn from contact with the stationary surface and the consequent drag upon the motor parts thereby relieved.

In making a record of time it is of prime importance to note the day and year as well as the hour and minute, otherwise the latter has no meaning. In time stamps that have heretofore been used the means for recording the day and year have been poorly applied and unsatisfactory. In many instances the dater was not made a permanent part of the stamp organization and in others where it was incorporated into the structure no suitable means for adjustment or manipulation was provided. The most common use of means for indicating the day and year has been the daily fastening of individual rubber pieces in the stationary impression surface. This is a makeshift arrangement, however, and is troublesome and inefficient. The rubber blocks are likely to fall out of place or become lost, it takes an excess of time to make rearrangement every day; the alignment is apt to be poor and there are other apparent objections. It is conceded that for dating stamps, those of the band type are the most, if indeed not the only ones that are satisfactory. An important consideration therefore in the make up of a time stamp is the inclusion of a date recorder of the band type, and such incorporation provides an important feature of my invention. Equally important is the provision of suitable means for adjusting the band so as to bring into alignment for registry the desired data on the different bands. This I have done in a manner now to be described.

In Fig. 4 it will be noted that the rear casing member 22 is bulged at its lower extremity and is provided with slots 59 through which the handles 60 project. The band dater 60^a is of approved construction having a stationary shaft 61 and U-shaped bed 62, fastened in the side walls 21^a. Loosely mounted on the shaft 61 are rotatable belt supports or pulleys 63, these being serrated to provide a firm and positive gripping for the rubber belts 64. Four pulleys and four belts are provided, one belt being for the months, two for the days and one for the years. The printing characters on the belts are formed on raised portions 65 and to register the desired data, selected portions 65 of each band are brought into alignment along the bed 62 and by the following means.

Notched circular plates 66 of greater diameter than pulleys 63 are fastened to said pulleys and turn with the same. In the ordinary use of a band dater the belts are adjusted by turning plates 66 with the fingers, but here the band dater being enclosed within the casing 20, plate 66 is not accessible. Consequently for each plate 66 I provide adjacent thereto an operating device comprising a disk 67, loosely and independently mounted on shaft 61 and having a handle 60 which projects through a slot 59 in casing 22 as hereinbefore stated. Handle 60 is mounted on that side of the disk 67 adjacent plate 66 and comprises an outer telescopic cover 68, enclosing spring block 69 and spring 70. The side walls of cover 68, converge at the bottom forming an angular projection 71 adapted to enter the notches on the periphery of plate 66. Normally, the handle 60 is not in engagement with plate 66 by reason of the influence of spring 60.

Said spring is compressed as the handle cover 68 is forced down into engagement with plate 66, and upon release of the pressure, it pushes said handle cover back to its normal position.

It will be readily understood that when handle cover 68 and plate 66 are interlocked, the belt 64 can be moved in either direction to the extent allowed by the length of slot 59. If additional movement is required, the engagement can be released and a fresh hold taken at the other end of the slot.

When the handles 60 are not in use it is desirable that they be in position at the top of slots 59 to immediately engage plates 66 for a forward or advancing movement of belts 64. In order that they may return automatically to position and be retained there, I provide for each a spring 72 fastened at one end to the disk 67 beyond the center with respect to handle 60, and at the other end to a pin or bar 73.

As the handle is removed downwardly the spring 72 is expanded creating a tendency to exert itself in effecting movement in the opposite direction, so that as the handle is relinquished it is returned to the top of slot 59.

In order to avoid any tampering with the hands of the clock, and false registration, the minute arbor 35 does not extend to the rear wall of the casing nor have a handle available from the outside, and that the detail of regulation and setting might be in control of the proper persons, it is effected by a key which enters an irregular shaped slot 74 disposed in a revolvable plate 75 let into the rear casing member 22, directly in line with slot 76 in an extended portion of sleeve 36.

Glued to the bottom of plate 23 is a rubber stamping surface 77 which may be lettered to register any appropriate matter, such as the user's name, the words "Paid", "Received" etc. Said stamping surface will have openings to accommodate the impression dial 55 and the band dater. The printing matter on the stamping surface will be normally above that on impression dial 55 and will lie in the same plane as indicators 51, 54 and registering portions of the band dater.

This arrangement produces a cleaner and more certain stamping and avoids slipping and blurring, which results if the resilient and unfirm stamping surface supports the weight of the time stamp and engages the surface to be stamped at the outset of the operation.

While I have explained in detail the structure illustrated in the drawings, I do not wish to be understood as limiting thereby the scope of the sub-joined claims, nor as excluding by lack of reference thereto modifications in organization and arrangement which embrace the substance and spirit of my invention.

Features herein disclosed but not claimed are claimed in my copending application for band dating stamp, Serial No. 584,671, filed August 28, 1922.

I claim:

1. In a time stamp, the combination with a horological motor and its gear train of an impression gear train arranged one above the other vertically, and a connecting rod for driving the latter, said rod comprising an intermediate and two end portions joined by pivotal brackets arranged to rock in planes at right angles to each other.

2. In a time stamp, the combination of a casing, a horological motor and gears, an impression dial yieldingly mounted at the bottom of said casing and time indicator impression members having their recording portions extending below the casing but normally above the plane of said dial, the impressions of said time indicator members being recorded when said dial has yielded under pressure, dater elements within the casing, and ratchet and pawl mechanism accessible from without the casing for advancing the dater elements step by step.

3. In a time stamp, the combination of a casing, a horological motor and its gears mounted within said casing, an apertured stamping surface unyieldingly fastened at the bottom of said casing and having suitable printing matter thereon, a yieldingly mounted impression dial normally extending below said surface, and time indicator impression members having their recording portions extending through said apertured stamping surface and lying in the same plane as the printing matter thereon, a complete impression being recorded as said dial yields under pressure, a band dater also mounted within the casing, and ratchet and pawl mechanism accessible from without for setting the band dater.

In testimony whereof I have hereunto signed my name in the presence of two subscribing witnesses.

MORRIS SHERAS.

Witnesses:
FRANKLIN M. WARDEN,
EBBA F. NYDEN.