(19) Europäisches Patentamt
European Patent Office
Office européen des brevets

(11) EP 2 289 796 A1

(12) EUROPEAN PATENT APPLICATION

(43) Date of publication:
02.03.2011 Bulletin 2011/09

(51) Int Cl.:
B63B 9/00 *(2006.01)* ***B63B 17/00*** *(2006.01)*

(21) Application number: **10075335.9**

(22) Date of filing: **05.08.2010**

(84) Designated Contracting States:
AL AT BE BG CH CY CZ DE DK EE ES FI FR GB GR HR HU IE IS IT LI LT LU LV MC MK MT NL NO PL PT RO SE SI SK SM TR
Designated Extension States:
BA ME RS

(30) Priority: **31.08.2009 BE 200900532**

(71) Applicant: **Van Rompay, Boudewijn Gabriel**
Clearwater, FL 33756 (US)

(72) Inventor: **Van Rompay, Boudewijn Gabriel**
Clearwater, FL 33756 (US)

(74) Representative: **Donné, Eddy**
Bureau M.F.J. Bockstael nv
Arenbergstraat 13
2000 Antwerpen (BE)

(54) **Method for repairing damages to a craft under the water line and device used for that purpose**

(57) The invention relates to a method for repairing damages to a craft under the water line, more specifically damages to a protruding part of the craft, such as a rudder (3) or the like, in which around the protruding part there is placed a bag (12) made of a water proof material with an opening (13) in the upper part which is at least partially located above the water line (4).

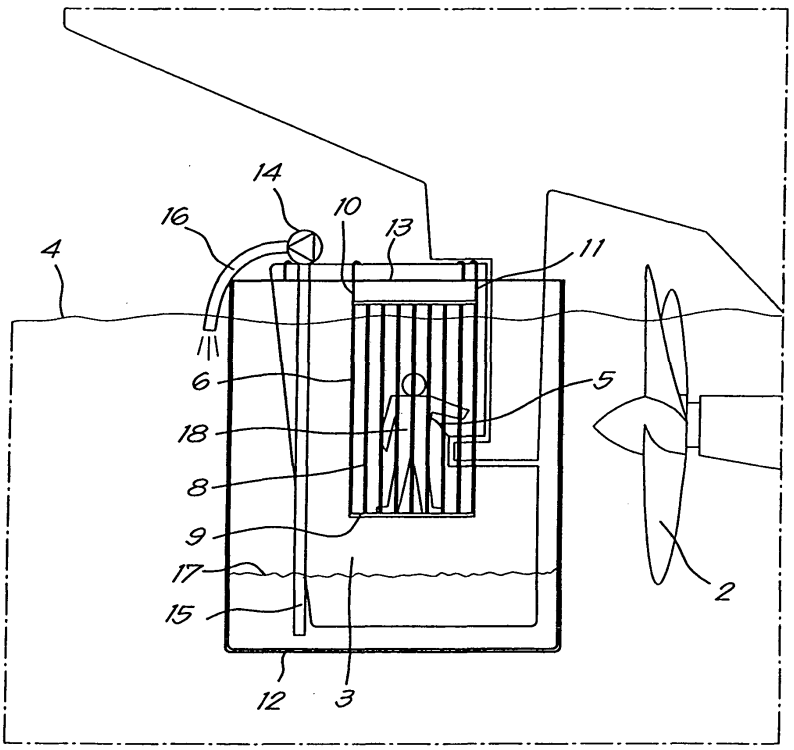

Fig.4

EP 2 289 796 A1

Description

[0001] The present invention relates to a method for repairing damages to a craft which are located under the water line.

[0002] More specifically, the invention is intended for the repair of the components of a craft which are located under the water line in contact with the water.

[0003] Examples of said components are the rudder, the hull of the craft, casings of components such as sonar equipment or a shaft which are in direct contact with the water.

[0004] Such damages are traditionally repaired during maintenance jobs in a dry dock, all the parts that were under the water line being rendered dry and freely accessible for their repair.

[0005] A drawback of this traditional method is that such repair has a high cost not only because the craft is taken to a dry dock, but also because it must be taken out of service for some time in order to allow the maintenance.

[0006] Methods for the underwater repair of damages under the water line are already known, such as for example underwater welding or scuba divers performing repairs. These methods could be useful for the provisional repair of damages to a craft, but they normally do not allow performing a permanent repair, so the material of the craft must be able to be treated in dry conditions.

[0007] A drawback of performing underwater repairs is the additional cost necessary for being able to work in such special conditions, such as special tools, lighting, scuba diving material and the like.

[0008] The objective of the present invention is to provide a solution to the aforementioned and other drawbacks, given that it relates to a method which allows performing repairs in a dry state of the components of the craft which are located under the water line, and doing so with a relatively low cost and without there being any need to take the craft out of the water.

[0009] To that end, the invention relates to a method for repairing damages to a craft under the water line, more specifically damages to a protruding part of the craft such as a rudder or the like, in which around the protruding part there is arranged a bag which has an opening at the top located above the water line; there are arranged means for keeping the bag open for the purpose of creating around the area of the damages a space for performing the repair; at least part of the bag is emptied with a pump to a leval under the location of the damages; and the repair is performed in dry conditions.

[0010] An advantage of this method is that the repair of the damages can be performed in a dry state, such that it is also possible to perform permanent repairs, but without having to take the craft out of the water to that end.

[0011] Another advantage of this method is that the necessary auxiliary means, such as a bag and the means which must be introduced in the bag are relatively simple and inexpensive, and relatively lightweight, so they are easily transportable to the location where the repair is to be performed.

[0012] Furthermore, the bag does not have to meet strong strength requirements given that, since the water is pumped out of the bag, the bag is tightened against the fixed structure of the craft, for example against the fixed structure of the rudder, so the bag is well secured and does not have special tensile strength requirements. This means that the bag can be manufactured from a relatively inexpensive material, such as rubber, where appropriate reinforced rubber could be used, which, however, is not strictly necessary.

[0013] Furthermore, it is not necessary for the bag to be completely water impermeable, but rather relatively small filtrations will be tolerated when the filtration water is pumped out permanently or regularly.

[0014] Preferably, the means for keeping the bag open should be such that they support the bag to absorb the water pressure at the outside of the bag when it has been completely emptied by pumping.

[0015] For this purpose, these means could have the form of a rigid cage with discontinuous or continuous walls placed with an opening against the component to be repaired and which has in the lower part a work platform on which a worker can be situated, and which work cage is open at the top or has an opening for entering the work space and in which, furthermore, the work cage is open or has an opening at the location of the area to be repaired.

[0016] The area to be repaired is preferably kept continuously dry by pumping the leakage water out of the bag. The work area is thus permanently kept dry, which has the advantage that the repair could be more thorough.

[0017] If possible, the area to be repaired is elevated as high as possible, displacing the ballast of the craft in order to elevate the damages to be repaired as much as possible with respect to the water line.

[0018] An advantage of this method is that the damages to be repaired are located at a lower depth in the water and they will thus be more accessible for the bag and the auxiliary means according to the invention.

[0019] The invention also relates to a device used in the previously mentioned method and it is made up of at least one bag made of a water impermeable material that can be arranged around a component of the craft under the water line with an opening that can be at least partially elevated above the water line; of means for keeping the bag open at the location of the damages to a craft; of a pump system to remove water from the bag permanently.

[0020] The means for keeping the bag open could consist of a work cage made of a material which conserves its shape, provided with a work platform.

[0021] For the purpose of better showing the features of the invention, a preferred embodiment of the method according to the invention will be described below as an illustrative and non-limiting example with reference to the attached figures in which:

Figure 1 is a schematic side view of the stern of a craft to be repaired;

Figures 2 to 4 are the consecutive steps of the method according to the invention,

Figure 5 is a section according to the line V-V of Figure 3, at the height of the area to be repaired, and this being perpendicular to the longitudinal axis of the craft.

[0022] Figure 1 depicts the stern 1 of a craft which is classically provided with a propeller 2 and a rudder 3 that is traditionally made as a protruding part of the craft under the water line 4.

[0023] The rudder 3 sustains damages with a certain regularity, which damages are herein schematically depicted as a crack 5 in the rudder, this crack 5 being located in this case under the water line 4.

[0024] Figure 2 depicts a rigid work cage 6, placed against the work area 7 and which, in this case, has the form of a cage with bars 8 provided with a bottom 9 on which someone can be situated and which is open in the upper part and on the side with which the cage is placed against the rudder.

[0025] This cage is secured or hung from the craft by suitable means, or, for example in this case, it is hung by cables 10, 11 attached to the upper part of the rudder.

[0026] Figure 3 depicts a waterproof bag 12 according to the invention which is placed around the rudder 3 and which in this case was slid over the rudder 3 from the bottom up and is provided with an opening 13 in the upper part, the edge of which is elevated above the water line and it is suspended from the craft with cables or the like.

[0027] There is provided a pumping device which is made up of a pump 14 with a supply tube 15 which reaches down to the bottom of the bag and a drain pipe 16, the outlet of which is outside the bag.

[0028] Figure 4 depicts a worker 18 making the repair on the platform 9 of the cage, while the bag is constantly emptied by pumping, such that the level of water in the bag remains lower than the platform 9.

[0029] Figure 5 shows a section of the device according to the invention in a plane perpendicular to the longitudinal axis of the craft, in which it is shown how the bag 12 is kept open by the work cage 6, in which there is a platform 9 for making the repair.

[0030] The method according to the invention is very simple and is as follows.

[0031] In preparation, if possible, by displacing ballast the craft is positioned such that the part to be repaired is located as high as possible under the water line, so that the repair can be made as close as possible to the water line.

[0032] In a first step, the aforementioned work cage 6 is placed against the rudder 3.

[0033] In a second step, the bag 12 is slid over the rudder and over the work cage 6 and the bag 12 is hung by the upper part on the ship. The bag 12 is then completely emptied by pumping, or at least down to the point at which the level 17 of the water in the bag is under the level of the work cage 6, such that the work cage 6 and accordingly also the area 7 to be repaired fall dry. When emptied by pumping, due to the surrounding water pressure the bag 12 is flattened against the rudder 2 and against the work cage 6 which thus forms a means to keep the bag 12 open at the location of the work area 7 and which is resting on the area to be repaired of the craft due to the pressure of the water.

[0034] At this time the worker 18 can enter the work cage 6, with the tools necessary for making the repairs, and this is done in the dry state without requiring the intervention of a scuba diver.

[0035] In the event that the bag 12 is not completely water tight, the aforementioned pump 14 could additionally be used to remove the incoming leakage water, such that the work area 7 is permanently dry.

[0036] Given that the repair of the damaged part can be done in a dry state, chances to make a long-lasting repair are increased.

[0037] It is clear that the bag 12 can also be made of several materials, provided that they are sufficiently water tight.

[0038] It is also clear that the work cage 6 could be made of strong materials, but preferably lightweight, such as aluminum, galvanized steel, synthetic material, or others, and that, if necessary, the work cage 6 could be foldable.

[0039] The work cage 6 does not necessarily have to have an open structure, but it must preferably be provided with closed walls which better support the bag when pumping the water out in order to prevent cracks or as a result of which a less resistant bag could be used.

[0040] It is clear that other means for keeping the bag open are not excluded either.

[0041] It has been made clear that the invention is not limited to repairing a rudder 3, but that it can be applied to any protruding part of a craft.

[0042] Under determined circumstances, it is possible for the opening of the bag 13 to not be elevated completely above the water line 4 due to the fact that certain parts of the craft are a hindrance for doing so. In this case it is possible to raise the bag such that at least part of this opening 13 is above the water line and the remaining part of the opening that is under the water is closed against the craft with suitable plugging means.

[0043] The present invention is by no means limited to the embodiment described as an example and reflected in the drawings, but rather a method according to the invention could be carried out in many ways and dimensions without departing from the scope of the invention.

Claims

1. A method for repairing damages to a craft under the water line, more specifically damages to a protruding part of the craft, such as a rudder (3) or the like, in

which around the protruding part there is placed a bag (12) made of a water proof material with an opening (13) in the upper part which is at least partially located above the water line (4); there are arranged means for keeping the bag (12) open at the location of the damages to the craft (5) for the purpose of creating around the site where the damages are located a space for performing the repair; the bag (12) is at least partially emptied with a pump to a level under the location where the damages to the craft (5) are located; and the repair is performed under dry conditions.

2. The method according to claim 1, **characterized in that** the previously mentioned means for keeping the bag (12) open are such that they support the bag (12) to absorb the water pressure at the outside of the bag (12) when it has been completely emptied by pumping.

3. The method according to claim 1, **characterized in that** the means for keeping the bag open at the location of the damage to be repaired (5) consist of a rigid cage (6) with discontinuous or continuous walls placed with an opening against the component to be repaired.

4. The method according to claim 3, **characterized in that** the work cage (6) is provided in the lower part with a platform (9) on which a worker (18) can be situated and **in that** the work cage (6) is open at the top or has an opening for being able to enter the work space of the cage, and **in that** the work cage (6) is open or has an opening at the location of the area to be repaired (7).

5. The method according to claim 1, **characterized in that** the work cage (6) is made with continuous walls.

6. The method according to claim 1, **characterized in that** the area to be repaired (7) is constantly kept dry and **in that** the leakage water is pumped out of the bag (12) for that purpose.

7. The method according to claim 1, **characterized in that** if possible, the area to be repaired (7) is elevated as high as possible, displacing the ballast of the craft for the purpose of placing the damaged area as elevated as possible with respect to the water line (4).

8. The method according to claim 1, **characterized in that** the previously mentioned means for keeping the bag (12) open are means for keeping the bag (12) open only at the height of the area to be repaired (7).

9. A device for performing the method according to one of the previous claims, **characterized in that** at least it is made up of a bag (12) made of a water impermeable material that can be placed around a component of the craft under the water line (4) with an opening (13) that can be at least partially elevated above the water line (4); of means for keeping the bag open at the location of the damages to the craft (5); of a pumping system to remove water from the bag permanently.

10. A device for performing the method according to claim 7, **characterized in that** the means consist of a work cage (6) made of a material which conserves its shape, provided with a work platform (9).

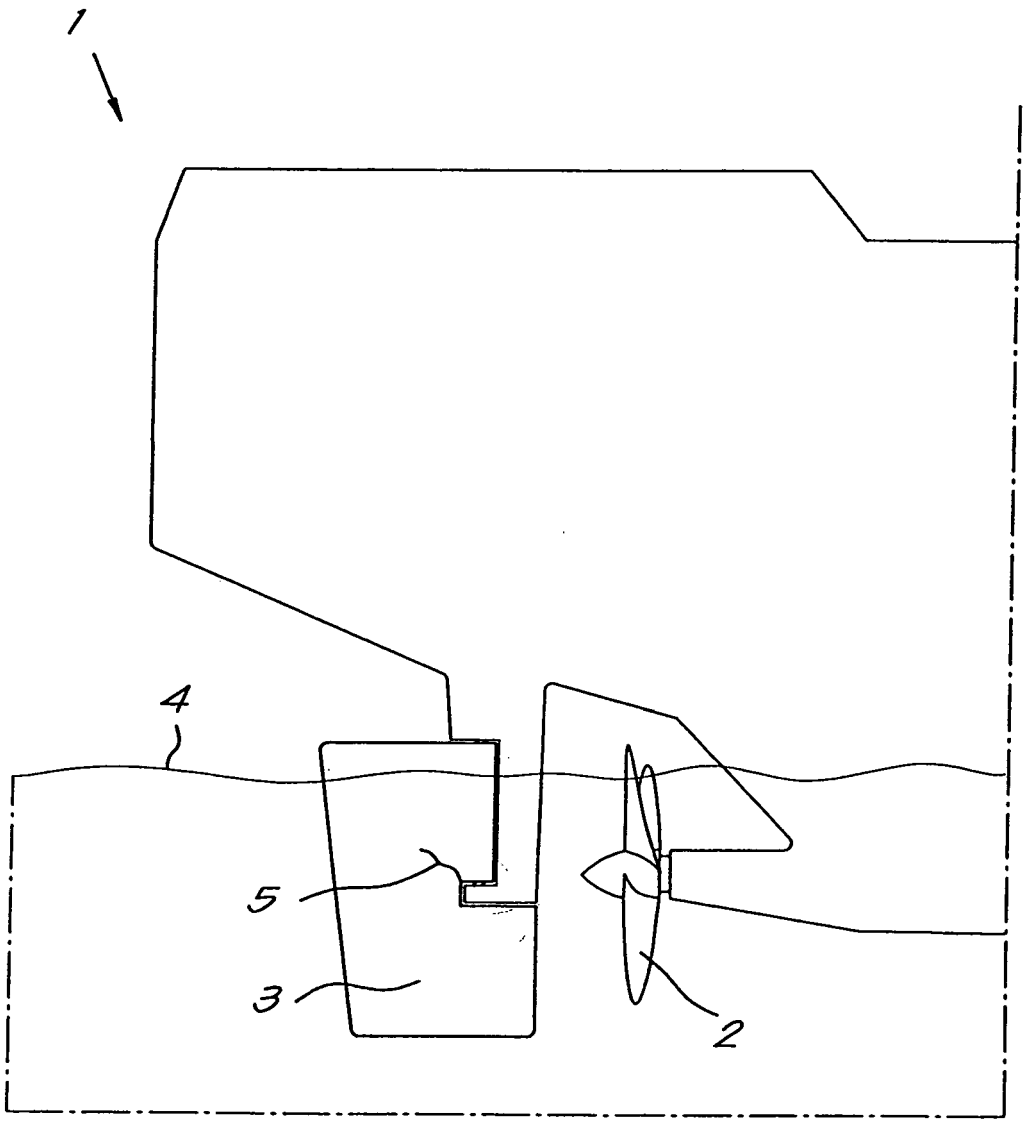

Fig. 1

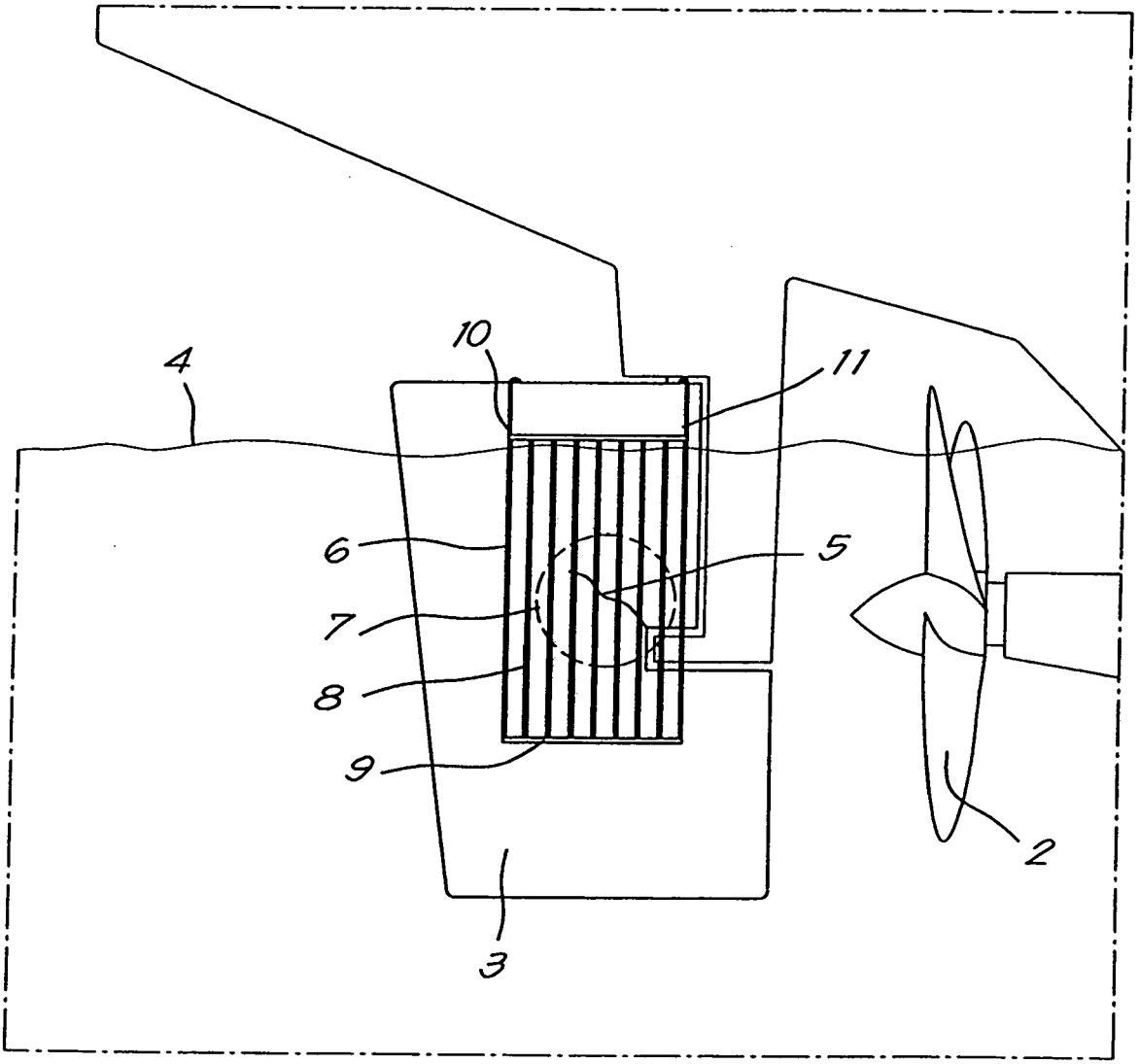

Fig.2

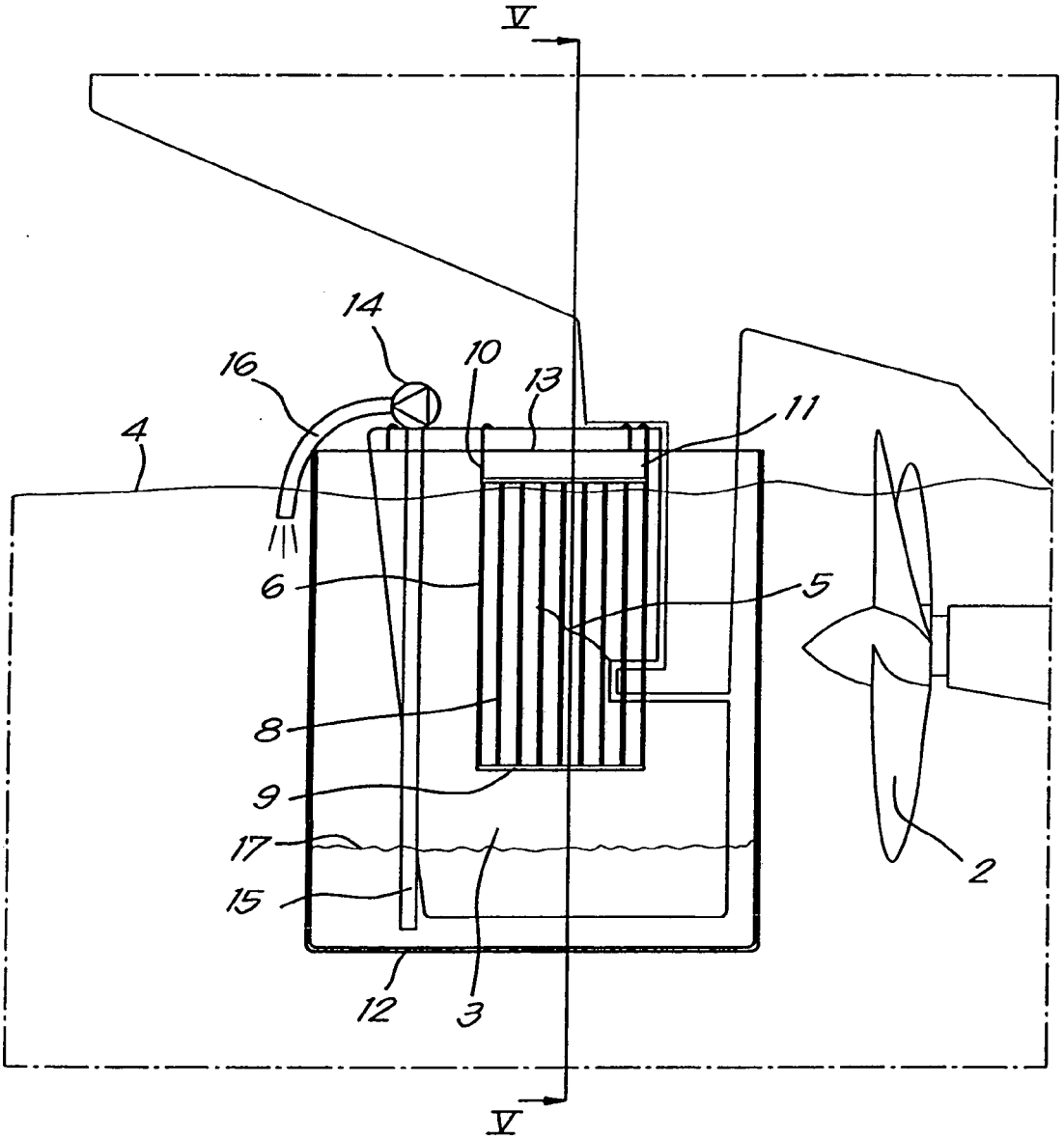

Fig.3

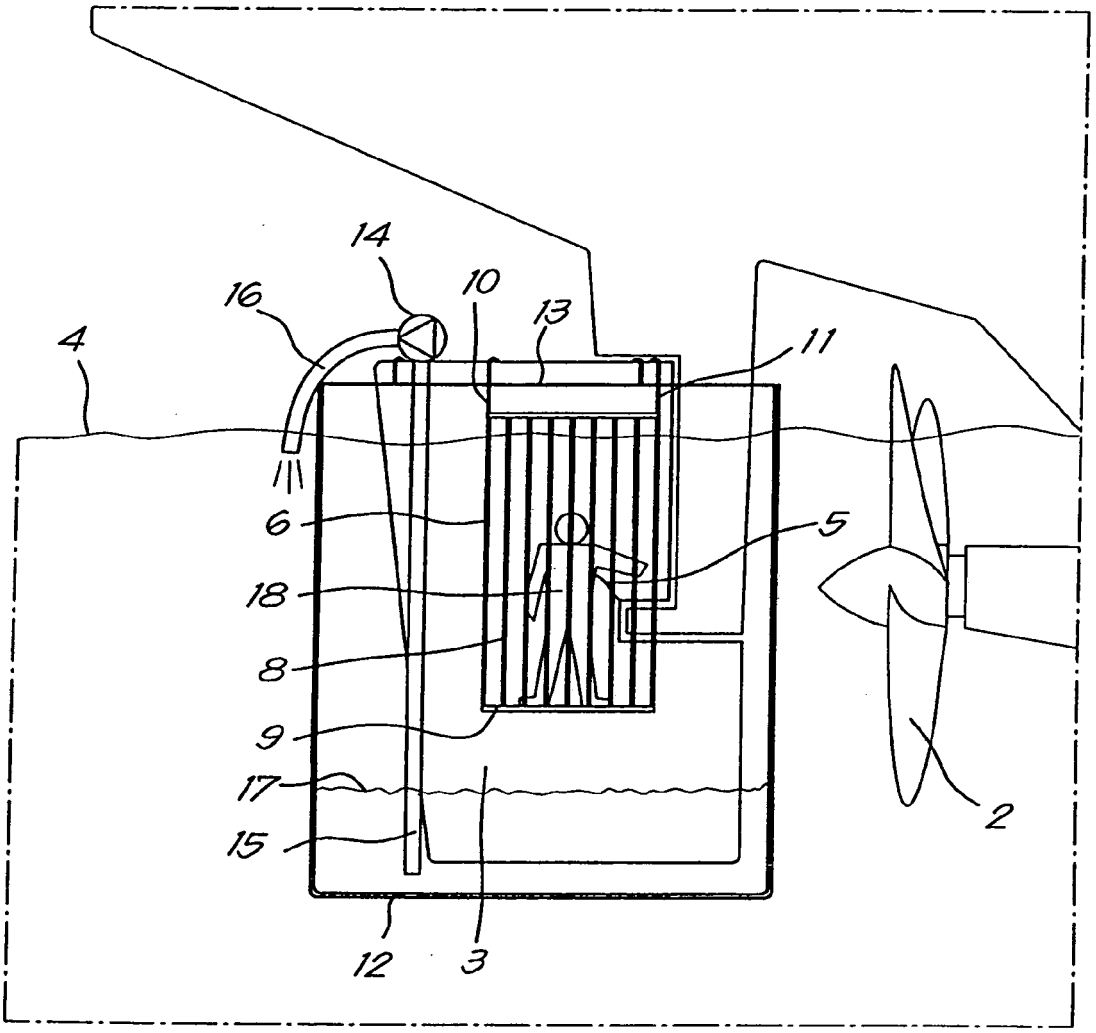

Fig.4

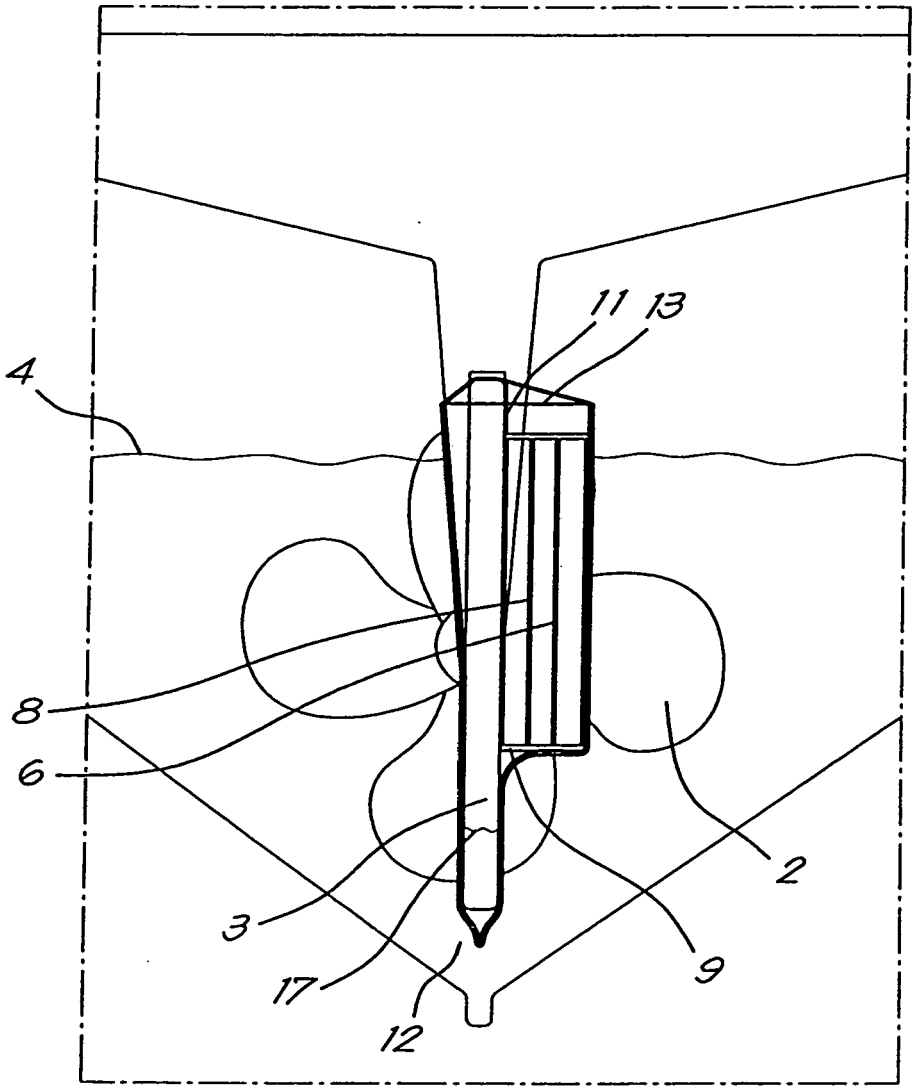

Fig.5

Europäisches Patentamt
European Patent Office
Office européen des brevets

EUROPEAN SEARCH REPORT

Application Number
EP 10 07 5335

DOCUMENTS CONSIDERED TO BE RELEVANT

Category	Citation of document with indication, where appropriate, of relevant passages	Relevant to claim
X	US 624 198 A (EICKE CARL AUGUST) 2 May 1899 (1899-05-02) * claim 1; figures 1-4 * * page 1, line 67 - line 92 * * page 2, line 12 - line 41 * * page 2, line 51 - line 86 * * page 2, line 115 - line 121 * -----	1-10
X A	US 623 961 A (QUIMBY CHARLES E) 25 April 1899 (1899-04-25) * claim 3; figures 1,2 * * page 1, line 15 - line 41 * * page 1, line 66 - line 75 * * page 2, line 28 - line 42 * -----	1-4,6-10 5
A	US 689 979 A (MASON DAVID) 31 December 1901 (1901-12-31) * page 1, line 23 - line 37; figures * * page 2, line 13 - line 71 * -----	1-5,9,10
A	DE 17 81 165 A1 (BLUDAU GERHARD) 21 January 1971 (1971-01-21) * figures 1-3 * -----	1,3-5, 8-10
A	US 651 337 A (BROOKSBANK FREDERICK C) 12 June 1900 (1900-06-12) * figures 1-6 * * page 1, line 34 - line 95 * -----	1,2,4, 8-10

CLASSIFICATION OF THE APPLICATION (IPC)

INV.
B63B9/00
B63B17/00

TECHNICAL FIELDS SEARCHED (IPC)

B63B

The present search report has been drawn up for all claims

Place of search	Date of completion of the search	Examiner
The Hague	7 January 2011	Häusler, F

CATEGORY OF CITED DOCUMENTS

X : particularly relevant if taken alone
Y : particularly relevant if combined with another document of the same category
A : technological background
O : non-written disclosure
P : intermediate document

T : theory or principle underlying the invention
E : earlier patent document, but published on, or after the filing date
D : document cited in the application
L : document cited for other reasons

& : member of the same patent family, corresponding document

EPO FORM 1503 03.82 (P04C01)

ANNEX TO THE EUROPEAN SEARCH REPORT ON EUROPEAN PATENT APPLICATION NO. EP 10 07 5335

This annex lists the patent family members relating to the patent documents cited in the above-mentioned European search report.
The members are as contained in the European Patent Office EDP file on
The European Patent Office is in no way liable for these particulars which are merely given for the purpose of information.

07-01-2011

Patent document cited in search report	Publication date	Patent family member(s)	Publication date
US 624198 A		NONE	
US 623961 A		NONE	
US 689979 A		NONE	
DE 1781165 A1	21-01-1971	NONE	
US 651337 A		NONE	

EPO FORM P0459

For more details about this annex : see Official Journal of the European Patent Office, No. 12/82