Jan. 5, 1954 E. A. JACOBSON 2,664,817

MACHINE FOR SELECTIVELY PRINTING AND FEEDING TAPE

Filed Oct. 27, 1949

4 Sheets-Sheet 1

Fig. 1.

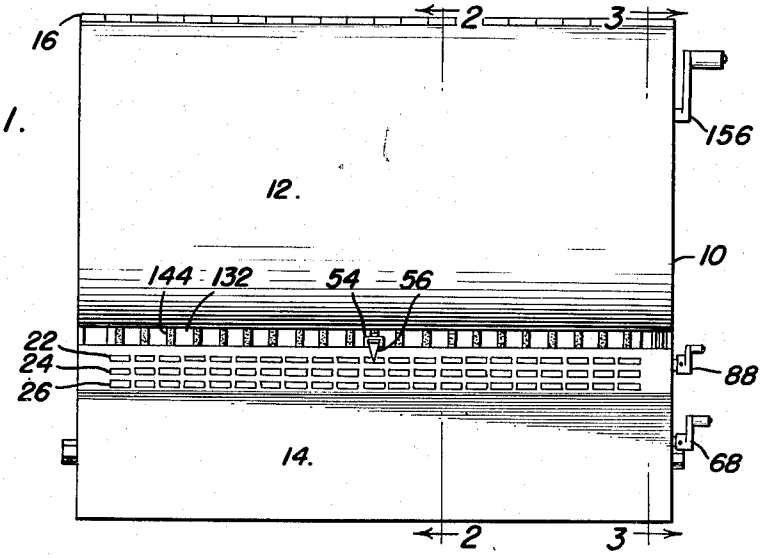

Fig. 4.

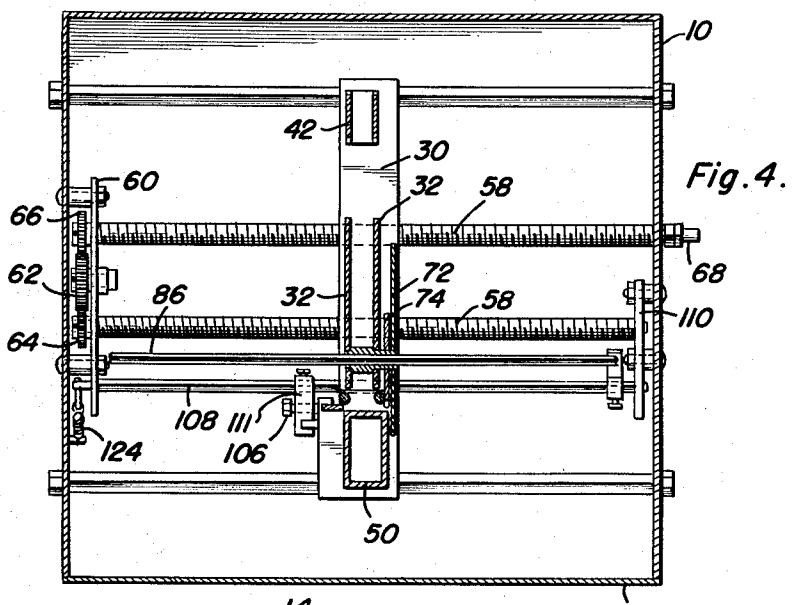

Fig. 13.

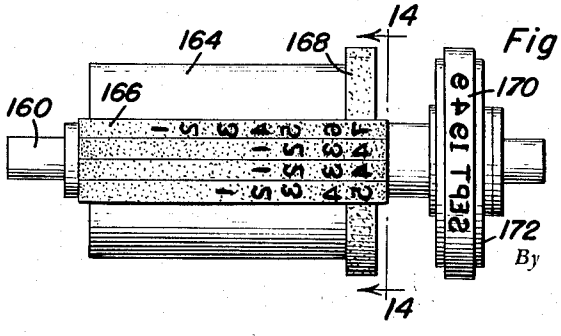

Inventor

Earl A. Jacobson

By Clarence A. O'Brien and Harvey B. Jacobson

Attorneys

Jan. 5, 1954 E. A. JACOBSON 2,664,817

MACHINE FOR SELECTIVELY PRINTING AND FEEDING TAPE

Filed Oct. 27, 1949

4 Sheets-Sheet 2

Fig. 2.

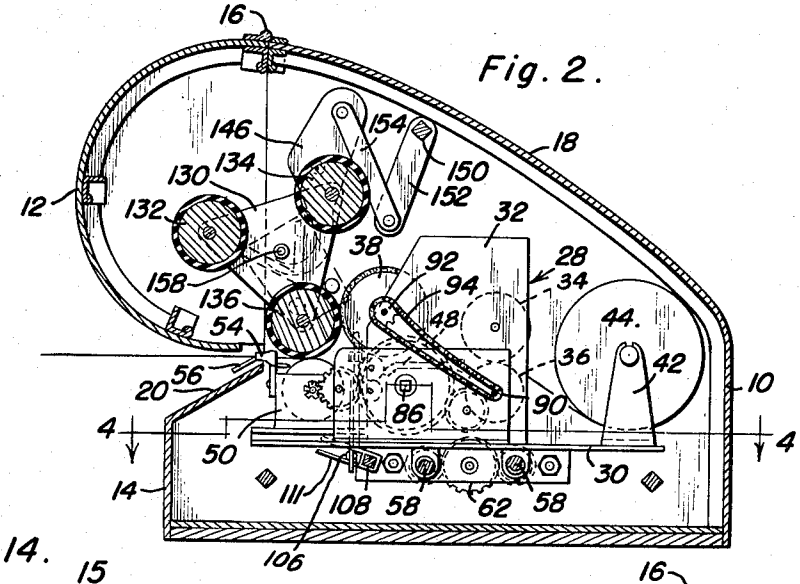

Fig. 14.

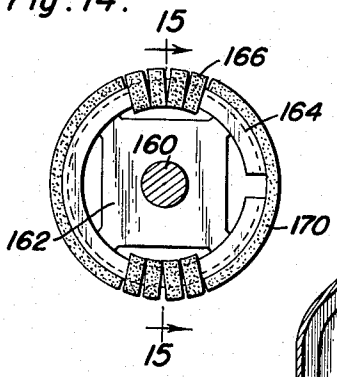

Fig. 3.

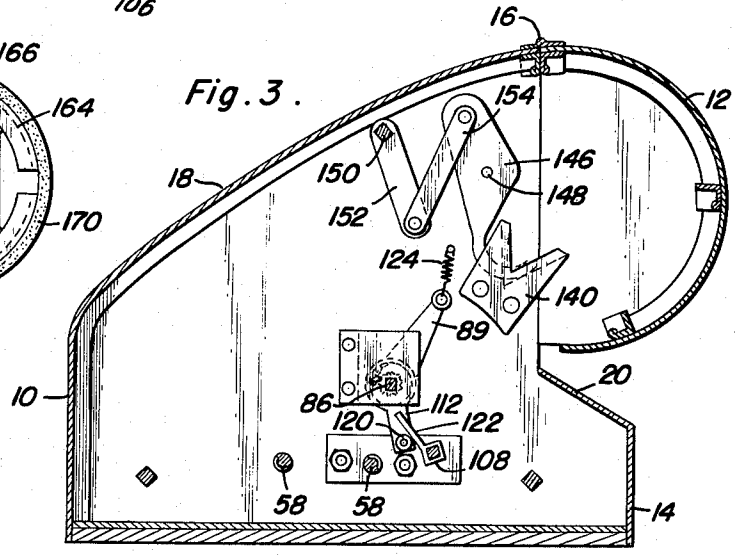

Fig. 15.

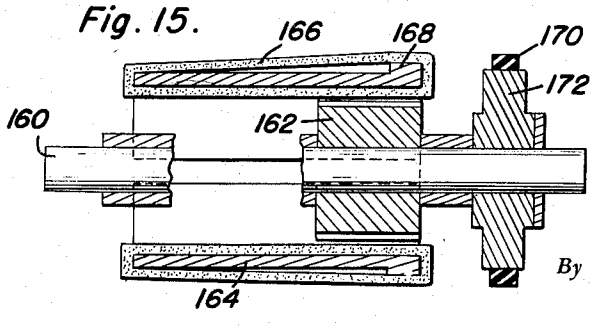

Inventor

Earl A. Jacobson

By Clarence A. O'Brien and Harvey B. Jacobson

Attorneys

Jan. 5, 1954 E. A. JACOBSON 2,664,817

MACHINE FOR SELECTIVELY PRINTING AND FEEDING TAPE

Filed Oct. 27, 1949 4 Sheets-Sheet 3

Fig. 5.

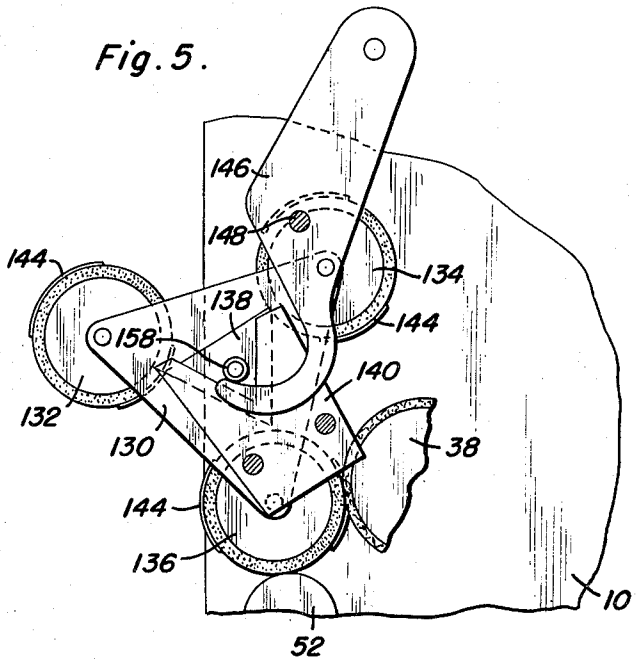

Fig. 7.

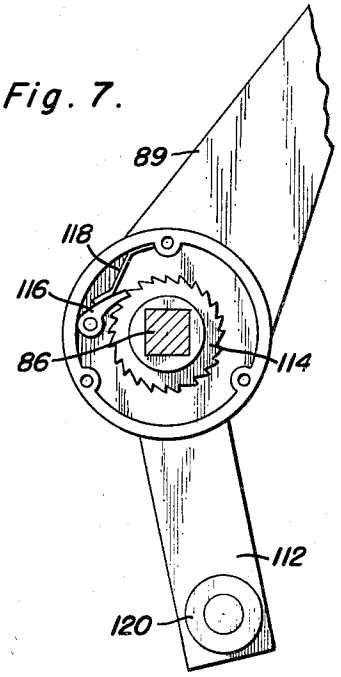

Fig. 6.

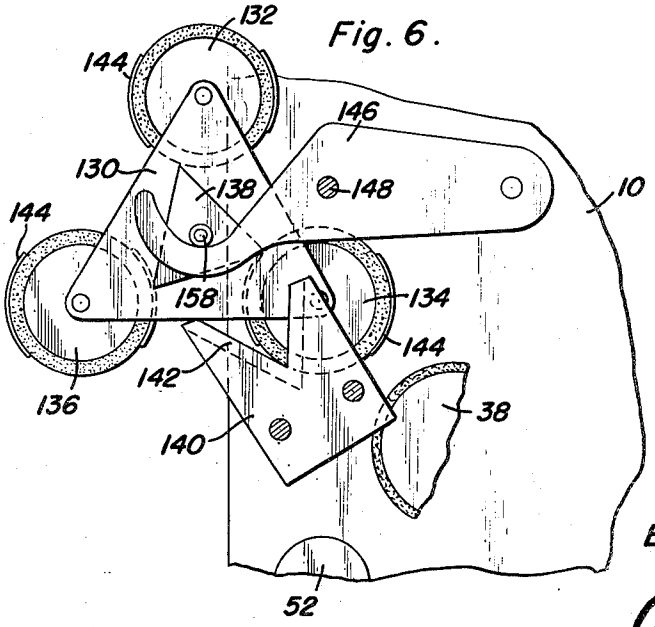

Fig. 8.

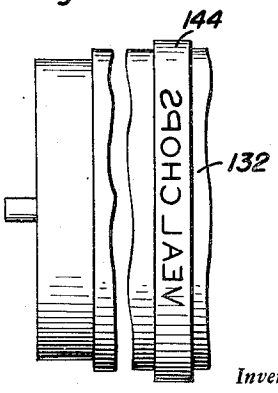

Inventor

Earl A. Jacobson

By Clarence A. O'Brien and Harvey B. Jacobson

Attorneys

Jan. 5, 1954 E. A. JACOBSON 2,664,817

MACHINE FOR SELECTIVELY PRINTING AND FEEDING TAPE

Filed Oct. 27, 1949 4 Sheets-Sheet 4

Fig. 9.

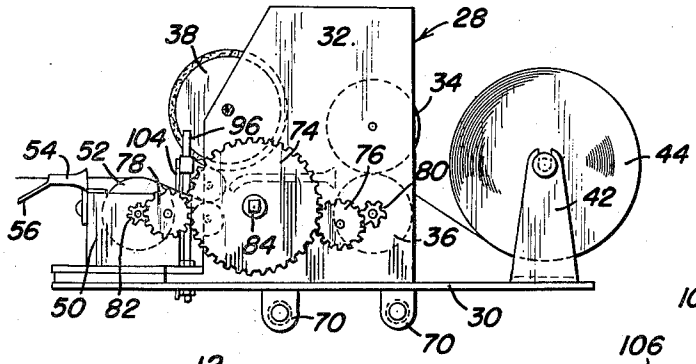

Fig. 12.

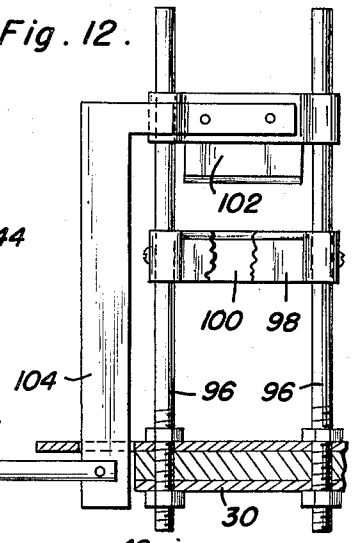

Fig. 10.

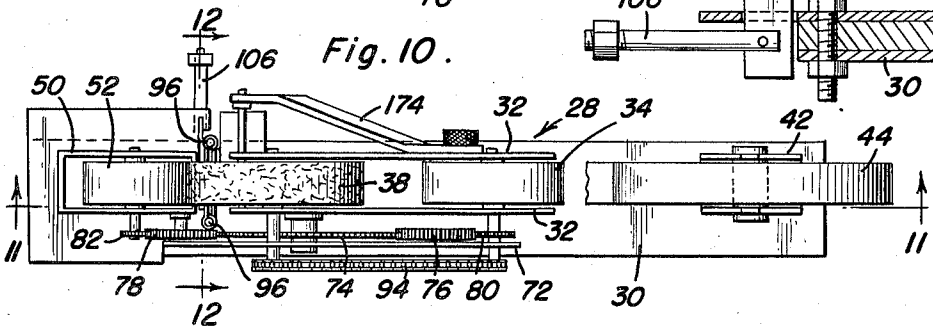

Fig. 11.

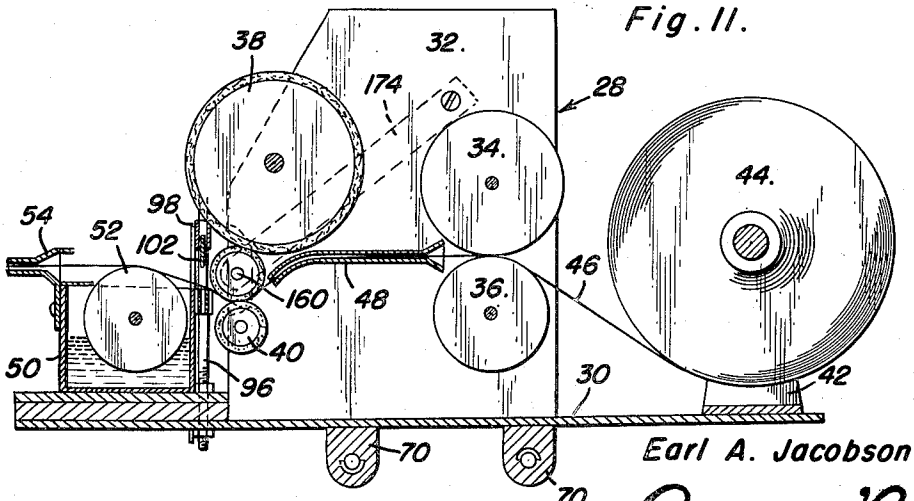

Inventor

Earl A. Jacobson

By Clarence A. O'Brien and Harvey B. Jacobson

Attorneys

Patented Jan. 5, 1954

2,664,817

UNITED STATES PATENT OFFICE

2,664,817

MACHINE FOR SELECTIVELY PRINTING AND FEEDING TAPE

Earl A. Jacobson, Elk Point, S. Dak.

Application October 27, 1949, Serial No. 123,811

11 Claims. (Cl. 101—92)

1

This invention relates to new and useful improvements in tape machines and the primary object of the present invention is to provide a machine for stamping the date, locker number and type of meat or chicken cut on a tape whereby a packaged article may be quickly and readily identified.

Another important object of the present invention is to provide a tape machine for stamping tape during the packaging of meat, chicken, cheese and the like, so that the package may be stored according to the type article and packaging date, thereby reducing to a minimum the time required for packaging and classifying meat, chicken and cheese cuts.

Yet another object of the present invention is to provide a tape machine including a tape feeding mechanism, a tape cutting mechanism and a common means for actuating both the feeding mechanism and the cutting mechanism.

Another object of the present invention is to provide a tape identifier including a gang of indicia holding rollers that are rotated as a unit to bring a selected one of the rollers into a position for stamping or printing.

Another object of the present invention is to provide a tape marking machine including a gang of rollers that are mounted to rotate as a unit and which rollers are also independently rotatable, a holder for the gang of rollers, and a mechanism for lifting the gang of rollers away from the holders so that the weight of the rollers and the placement of the rollers will cause the same to revolve to bring one of the rollers into a position for printing when the rollers are again lowered.

A further object of the present invention is to provide a tape machine including a printing roller having a plurality of longitudinally spaced indicia bearing strips thereon, a tape holder movable longitudinally of the roller, and a combined tape guide and indicator for indicating when the tape on the holder is in registry with a selected strip on the roller.

A still further aim of the present invention is to provide a tape machine that is simple and practical in construction, strong and reliable in use, efficient and durable in operation, small and compact in structure, neat and attractive in appearance, relatively inexpensive to manufacture, and otherwise well adapted for the purposes for which the same is intended.

Other objects and advantages reside in the details of construction and operation as more fully hereinafter described and claimed, reference being had to the accompanying drawings forming part hereof, wherein like numerals refer to like parts throughout, and in which:

2

Figure 1 is a front elevational view of the present invention;

Figure 2 is a transverse vertical sectional view taken substantially on the plane of section line 2—2 of Figure 1;

Figure 3 is a transverse vertical sectional view taken substantially on the plane of section line 3—3 of Figure 1;

Figure 4 is a horizontal sectional view taken substantially on the plane of section line 4—4 of Figure 2;

Figure 5 is an enlarged fragmentary view showing the manner in which the gang of rollers are supported within the housing and relative to the bearing roller;

Figure 6 is a view similar to Figure 5 and showing the gang of rollers raised and rotated, as a unit, relative to the bearing roller;

Figure 7 is an enlarged detail view showing the common actuating means for the feed mechanism and the cutter mechanism;

Figure 8 is a fragmentary plan view of one of the indicia holding rollers;

Figure 9 is a side elevational view of the tape holder and the tape feeding means associated therewith, also showing the tape guide and pointer;

Figure 10 is an enlarged plan view of Figure 9;

Figure 11 is a longitudinal vertical sectional view taken substantially on the plane of section line 11—11 of Figure 10;

Figure 12 is an enlarged detail sectional view taken substantially on the plane of section line 12—12 of Figure 10 to illustrate the cutting mechanism;

Figure 13 is an elevational view of the roller for printing or marking a date and a locker number;

Figure 14 is a transverse vertical sectional view taken substantially on the plane of section line 14—14 of Figure 13; and,

Figure 15 is a longitudinal vertical sectional view taken substantially on the plane of section line 15—15 of Figure 14.

Referring now to the drawings in detail, wherein for the purpose of illustration, there is disclosed a preferred embodiment of the present invention, the numeral 10 represents a housing having spaced upper and lower front wall sections 12 and 14. The upper front wall section 12 is hinged, as at 16, to the upper wall 18 of the housing to permit the section 12 to be raised for access into

the interior of the housing. The lower front wall section 14 includes an upwardly and rearwardly inclined panel 20 having three rows of indicia bearing plates 22, 24 and 26 for a purpose which will later be more fully described.

Tape holder

A tape holder 28 is mounted within the housing 10 for sliding movement and includes a base plate 30 and a pair of spaced walls 32 rising from the base plate 30. A pair of upper and lower vertically rotatable rollers or disks 34 and 36 are journaled on and between the walls 32 for rotation.

An ink holding and applying roller 38 is also journaled for rotation on and between the walls 32, forwardly of the disks 34, 36, and this ink holding and applying roller 38 is disposed above and slightly to the rear of an auxiliary bearing roller 40 that is journaled for rotation on and between the walls 32.

A substantially U-shaped bracket 42 is supported on the rear end of the base plate 30 and holds a rotatable tape spool 44 about which there is wound a suitable tape 46, preferably a tape having a plain face on one side and a glue on its other side. The tape 46 is trained between the disks 34, 36, extends through a tubular guide 48 mounted between the walls 32, and rests upon the auxiliary bearing roller 40 as shown best in Figure 11 of the drawings.

A receptacle 50 constitutes a part of the tape holder and is mounted on the forward end of the base plate and forwardly of the auxiliary bearing roller 40. A vertically rotatable moisture applying roller or main bearing roller 52 is mounted for rotation in the receptacle 50 and receives the tape 46 from the auxiliary bearing roller 40. A forwardly extending tubular guide 54 is supported on the receptacle 50 and includes a depending pointer 56 that is spaced above the panel 20 for registry with the plates 22, 24 and 26.

Means for moving the tape holder

Means is provided for supporting and for moving the tape holder 28 within the housing 10 so that the pointer 56 will register with a selected plate of each of the rows of plates 22, 24, 26. This means comprises a pair of horizontally disposed, spaced parallel, feed screws or threaded rods 58 having one of their ends journaled on one wall of the housing and their remaining ends journaled on a plate 60 spaced from the inner surface of the housing, as shown in Figure 4.

The plate 60 supports a pinion 62 that engages gears 64 and 66 secured to the rods 58 so that the rods 58 will rotate together and in the same direction, either clockwise or counterclockwise. A handle 68 is applied to one of the rods 58 and is disposed exteriorly of the housing whereby the rods 58 may be rotated manually.

Internally threaded ears 70 depend from the base plate 30 and receive the rods 58 so that as the rods 58 are rotated the tape holder 28 will travel or move within the housing 10.

Tape feeding mechanism

A mechanism is provided for feeding tape from the spool 44 to the guide 54. This mechanism includes a wall 72 that is spaced from one of the walls 32. A main drive gear 74 is journaled for rotation on the wall 72 and drives pinions 76 and 78 also journaled on the wall 72 for rotation. The pinion 76 engages a gear 80 fixed on the supporting shaft for the disk 36 and the pinion 78 engages a gear 82 fixed on the supporting shaft for the moisture applying roller 52, as shown best in Figure 9 of the drawings.

The main drive gear 74 is provided with a square central opening 84 through which is extended a square shaft 86 having its ends journaled for rotation of the end walls of the housing 10. The shaft 86 is spaced parallel to the rods 58 and one end of the shaft 86 supports a hand lever or handle 88 that is disposed exteriorly of the housing 10 and a projection 89 that is disposed within the housing 10.

The supporting shafts for the disk 36 and the ink holding and applying roller 38 support gears 90 and 92 about which there is trained a chain drive 94 so that as the disk 36 is rotated for feeding tape through the guides 48 and 54, the ink holding and applying roller 38 will also be rotated (see Figure 2).

Tape cutting mechanism

Means is provided for cutting the tape after a predetermined amount thereof has been extended through the guide 54. This cutting mechanism is shown best in Figure 12 and its location is shown in Figures 9 and 10. A pair of spaced parallel posts or bolts 96 extend upwardly from the base plate 30 and slidably and adjustably support a pair of spaced parallel blades 98 and 100 having upper sharpened edges.

The tape 46 is extended between the posts 96 so that the posts will act as a guide means for retaining the tape on the auxiliary bearing roller 40 and the main bearing roller 52.

The posts 96 also slidably support a vertically movable cutter member or blade 102 to which there is attached a depending bracket 104 having a laterally projecting arm 106, at its lower end that is disposed parallel to a rock shaft 108. The ends of the shaft 108 are journaled for rotation in the plate 60 and a further plate 110, respectively, the latter plate being mounted on one end wall of the housing 10, as shown in Figure 4.

A pair of clamping arms or plates 111 secured to and projecting laterally from the shaft 108 receive the arm 106 therebetween so that as the shaft 108 is rotated, the bracket 104 and blade 102 will slide downward with the blade 102 passing between the blades 98 and 100, to cut the tape resting on the blades 98 and 100.

Common operating means for the feeding mechanism and the cutting mechanism

Means is provided so that when the shaft 86 is rotated in one direction the tape will be fed from the spool 44 to the guides 48, 54 and whereby a rotation of the shaft 86 in an opposite direction will rotate the shaft 108 for actuating the cutter mechanism. The construction for accomplishing this desired result is shown best in Figure 7 of the drawings and consists of an operating member or contact member 112 journaled on the shaft 86 and which receives and houses a ratchet 114 that is keyed on the shaft 86. A pawl 116 is carried by the member 112 and is urged by a spring 118 into engagement with the ratchet 114 so that as the handle 88 and shaft 86 are rotated clockwise as shown in Figure 7 the ratchet 114 will pass by the pawl 116 so that member 112 and projection 89 will not move with the shaft 86 and tape will be fed to the guides 48 and 54. However, when the shaft 86 is rotated in a counterclockwise direction, as shown in Figure 7, the ratchet 114 will lock with the pawl 116 and the projection 89 and member 112 will swing to the right.

The lower end of the member 112 supports a

roller 120 that will ride against an arm 122 fixed to and projecting laterally from the shaft 108 (see Figure 3) as the member 112 is swung with the handle 88 and the shaft 86 to impart a rotation to the shaft 108.

The projection 89 is secured to the housing 10 by a coil spring 124 to yieldingly restrict rotation of the member 112 and the projection 89, and to retain the roller 120 spaced from the arm 122 as shown in Figure 3 of the drawings.

Gang of printing rollers

A gang of rollers is provided for printing or stamping indicia on the tape as the tape is trained over the main bearing roller 52. The gang of rollers is composed of two equilateral plates 130 the apices of which journally support the ends of printing or indicia holding rollers 132, 134 and 136 that extend the length of the rows of plates 22, 24 and 26.

Equilateral plates 138 are secured to and spaced from the outer faces of the plates 130 and are disposed with their apices spaced between adjacent apices of the plates 130 as shown in Figure 6.

A pair of holding plates or members 140 are secured to the end walls of the housing 10 and include substantially V-shaped seats 142 for receiving selected corners or apices of the plates to retain a selected one of the printing rollers against the main bearing roller 52 and the ink holding and applying roller 38.

Each of the rollers 132, 134 and 136 is provided with longitudinally and circumferentially spaced indicia bearing or type holding strips 144. The strips on the roller 132 relate to the cuts of certain type meat, the strips on the roller 134 relate to the cuts of another type of meat, and the strips on the roller 136 relate to the cuts of chickens, cheese or the like. The strips 144 are also correlated with the plates 22, 24, 26, for example, the strips on the roller 132 have words similar to the words on the plates 22, the strips on the roller 134 have words similar to the words on the plates 24, and the strips on the rollers 136 have words similar to the words on the plates 26 so that the user can tell what word is being printed on the tape by observing the pointer 56, and by adjusting the tape holder a selected word on a selected roller can be made on the tape.

Means for raising the gang of rollers

Means is provided for lifting the gang of rollers and more particularly for raising the plates 138 out of the seats 142. This means consists of a pair of vertically swingable hook members 146 that are pivoted, as at 148, to the housing 10.

A shaft 150 spaced parallel to the rollers 132, 134 and 136, and journaled on the housing 10 supports laterally projecting arms 152 that are connected to the hook members 146 by pitmans 154.

A suitable hand grip 156 is secured to the shaft 150 so that the latter may be manually rotated whereupon the hook members 146 will engage lugs or pins 158 projecting centrally from the plates 138 to effect a raising of the gang of rollers.

Attention is directed to Figures 5 and 6 to show the manner in which the gang of rollers is raised and revolved 90° during each raising thereof to bring a next roller into a position for printing.

It will be observed that when the gang of rollers is in place (Figure 5) the lower roller (136) contacts the roller 38 and bears against the tape on the roller 136. Also, the upper roller (134) is disposed on the same side of the pivot lugs 158 as the lower roller. Through this arrangement, as the plates 138 are moved out of the seats 142 by the hook members 146, the gang of rollers will revolve, clockwise when viewing Figures 5 and 6, so that the roller 134 will be lowered and the rollers 132 and 136 will be raised.

Then as the gang of rollers is lowered one apex of each of the plates 138 will engage a corner of each of the seats 142 to effect a clockwise rotation of the gang of rollers as the plates 138 slide into their seats. This latest operation is necessary since the normal balance of the gang of rollers will maintain the lower of the rollers slightly lower than when the same is in its position for printing.

Date and locker number printing roller

A printing roller is provided for printing a date and locker number on the tape. This roller is shown in Figures 13, 14, and 15 of the drawings and consists of a rod 160 on which there is fixed a spider 162. The arms of the spider 162 are secured to arcuate plates 164 that are spaced about the rod 160.

Flexible, preferably, rubber print bands 166 are trained longitudinally about the plates 164 and the plates 164 are provided with flanges 168 forming bearing surfaces for the print on the bands that will contact the tape.

A date band 170 having suitable type thereon, is placed about a wheel 172 on the rod 160.

The rod 160 is supported by an arm 174 and overlies the auxiliary bearing roller as shown in Figure 11 so that the tape will extend between the roller 40 and the date and locker number printing roller. The bands 166 and 170 also contact the ink holding and applying roller 38.

In practical use of the present invention, one of the printing rollers of the gang of rollers is first placed in position for printing, as aforementioned, with the plates 138 in the seats 142.

Then the handle 68 is rotated to move the tape holder to a selected position within the housing with the pointer 56 in registry with a selected one of the plates on the panel 20 thereby placing the tape so that one of the strips 144 will stamp the tape.

Next the shaft 86 is rotated counterclockwise (see Figure 3) to cut the tape at a desired length.

Since the various working parts have been described in detail previously a more detailed description is felt unnecessary.

In view of the foregoing description taken in conjunction with the accompanying drawings it is believed that a clear understanding of the device will be quite apparent to those skilled in this art. A more detailed description is accordingly deemed unnecessary.

It is to be understood, however, that even though there is herein shown and described a preferred embodiment of the invention the same is susceptible to certain changes fully comprehended by the spirit of the invention as herein described and the scope of the appended claims.

Having described the invention, what is claimed as new is:

1. A tape identifier for meats and the like comprising an elongated housing, a tape holder mounted in the housing for sliding movement longitudinally of the housing, a printing roller mounted in the housing and having a plurality of longitudinally spaced printing bands thereon, said holder including a pressure roller adapted to register with a selected one of said bands, means connected to the holder for moving the holder

longitudinally in the housing to position the pressure roller adjacent a selected one of said bands in printing relation therewith, means associated with the holder for feeding tape from the holder between the printing roller and the pressure roller, tape cutting means mounted on the holder adjacent the pressure roller and the printing roller for cutting the tape after it has passed between said rollers, and means carried by the housing and operatively connected to said tape cutting means for actuating the latter to cut the tape.

2. A tape identifier for meats and the like comprising an elongated housing, a tape holding carriage slidably mounted for longitudinal movement within the housing, means connected to the carriage for adjusting the carriage longitudinally in the housing, a pressure roller supported on the carriage, a printing roller mounted in the housing longitudinally thereof and overlying the pressure roller, a plurality of longitudinally spaced printing bands on the printing roller for selectively registering with and pressing against tape extending over the pressure roller from the carriage for printing thereupon, said tape holding carriage being adjustable longitudinally in the housing to selected positions relative to the printing roller, means carried by the holder for feeding tape from the holder between the printing roller and the pressure roller, cutting mechanism supported on the carriage, and means mounted on the housing and operatively connected to said cutting mechanism for actuating the latter to cut the tape leaving the pressure roller.

3. The combination of claim 1 and a common operating means for said tape feeding means and said tape cutting means.

4. The combination of claim 3, wherein said common operating means includes a rotatable shaft operatively connected to said tape feeding means and said tape cutting means, said shaft being rotated in one direction for actuating said tape feeding means and in an opposite direction to actuate said tape cutting means.

5. A tape machine comprising an elongated housing, a tape holder mounted in said housing for sliding movement longitudinally of the housing, means for moving the holder longitudinally within said housing, a first pressure roller supported on said holder, a tape feeding mechanism for urging the tape from the holder to the pressure roller, a cutting mechanism supported on the carriage disposed between said tape feeding mechanism and said pressure roller for cutting tape leaving the feeding mechanism, a first indicia holding roller on the holder for stamping a date and locker number on tape leaving the feeding mechanism, a second pressure roller on the holder and coacting with the first indicia holding roller, a second indicia holding roller disposed longitudinally within the housing and cooperating with the first pressure roller for stamping the type article on tape leaving the feeding mechanism, and means for selectively moving the second indicia holding roller toward and away from the first pressure roller.

6. A tape machine comprising an elongated housing, a tape holder mounted in said housing for sliding movement longitudinally of the housing, means for moving the holder longitudinally within said housing, a first pressure roller supported on said holder, a tape feeding mechanism for urging the tape from the holder to the pressure roller, a cutting mechanism supported on the holder and disposed between said tape feeding mechanism and said pressure roller for cutting tape leaving the feeding mechanism, a first indicia holding roller on the holder for stamping a date and locker number on tape leaving the feeding mechanism, a second pressure roller on the holder coacting with the first indicia holding roller, a gang of indicia holding rollers extending longitudinally of the housing, each of said rollers of said gang of rollers having a plurality of longitudinally spaced printing bands thereon for selectively engaging tape over the first pressure roller, means carried by said housing supporting said gang of rollers with a selected one of the rollers against a tape over the first pressure roller, and means for moving the gang of rollers away from the first pressure roller.

7. A tape identifier for meat cuts and the like comprising an elongated housing, a tape holding carriage mounted in said housing for sliding movement longitudinally of the housing and including a tape guide and a pointer on the guide, means connected to the carriage for adjusting the carriage longitudinally of the housing, longitudinally spaced indicia bearing plates mounted on the housing for selectively registering with the pointer as the carriage is adjusted longitudinally of the housing, a printing roller supported on the carriage for marking tape prior to the passing of the tape into the guide, a pressure roller on the carriage underlying the printing roller, a gang of spaced parallel rollers mounted longitudinally of and within said housing for selectively stamping tape after the tape has been stamped by the printing roller, a second pressure roller carried by said carriage and coacting with said gang of rollers, and means for actuating a selected roller of said gang to a printing position, said plates being arranged in vertically spaced horizontal rows, there being one row of plates for each roller of said gang, and each of said rollers of said gang having a plurality of longitudinally spaced printing bands correlated with and opposing its row of plates.

8. A tape identifier for meat cuts and the like comprising an elongated housing, a tape holding carriage mounted in said housing for sliding movement longitudinally of the housing and including a tape guide and a pointer on the guide, means connected to the carriage for adjusting the carriage longitudinally of the housing, longitudinally spaced indicia bearing plates mounted on the housing for selectively registering with the pointer, a pressure roller on said carriage, a first printing roller carried by the carriage and overlying the pressure roller, said pressure roller and said printing roller adapted to receive tape therebetween, a gang of spaced parallel rollers mounted in and disposed longitudinally of the housing, a main pressure roller supported on the carriage and coacting with a selected one of said gang of rollers, and means connected to said gang of rollers for positioning a selected one of said gang of rollers above and close to the main pressure roller, said rollers of said gang each having a plurality of longitudinally spaced printing stamps, said plates being arranged in vertically spaced horizontal rows, there being one row of plates for each roller of said gang to indicate the printing matter on said stamps.

9. A tape identifier for meat cuts and the like comprising an elongated housing, a tape holder mounted in the housing for sliding movement longitudinally of the housing, a printing roller mounted in the housing and having a plurality of longitudinally spaced printing bands thereon,

said holder including a pressure roller adapted to underlie a selected one of said bands, means connected to the holder for moving the holder to position the pressure roller under a selected one of said bands, means associated with the holder for feeding tape from the holder between the two rollers, first and second spaced parallel shafts journaled in said housing for rotation, cutting means for tape leaving the holder, a connector between said cutting means and said second shaft for actuating said cutting means during rotation of said second shaft, and means carried by said first shaft for imparting rotation to said second shaft during rotation of said first shaft in one direction.

10. A tape identifier for meat cuts and the like comprising an elongated housing, a tape holder mounted in the housing for sliding movement longitudinally of the housing, a printing roller mounted in and disposed longitudinally of the housing and having a plurality of longitudinally spaced printing bands thereon, said holder including a pressure roller adapted to underlie a selected one of said bands, means connected to the holder for moving the holder to position the pressure roller under a selected one of said bands, means associated with the holder for feeding tape from the holder between the two rollers, an indicia holding roller movable with the tape holder for stamping a date and locker number on tape leaving the feeding means, and a second pressure roller carried by the holder and underlying said indicia holding roller.

11. A tape identifier for meat cuts and the like

comprising an elongated housing, a tape holder mounted in the housing for sliding movement longitudinally of the housing, a printing roller mounted in and disposed longitudinally of the housing and having a plurality of longitudinally spaced printing bands thereon, said holder including a pressure roller adapted to underlie a selected one of said bands, means connected to the holder for moving the holder to position the pressure roller under a selected one of said bands, means associated with the holder for feeding tape from the holder between the two rollers, a cutting mechanism disposed between said feeding means and said printing roller for cutting tape leaving the feeding means, an indicia holding roller movable with the holder for stamping a date and locker number on tape leaving the feeding means, and a second pressure roller carried by the holder and underlying said indicia holding roller.

EARL A. JACOBSON.

References Cited in the file of this patent

UNITED STATES PATENTS

Number	Name	Date
121,602	Fayman	Dec. 5, 1871
1,208,642	Pitney	Dec. 12, 1916
1,654,796	Duff	Jan. 3, 1928
2,175,959	Goldstein	Oct. 10, 1939
2,192,132	Gautier	Feb. 27, 1940
2,250,534	Higgins	July 29, 1941
2,281,577	Haynes	May 5, 1942
2,343,721	Van Tuyl	Mar. 7, 1944