March 21, 1950 E. J. HUBELMEYER 2,501,334

LABEL-CUTTING MACHINE

Filed Sept. 7, 1946 7 Sheets-Sheet 1

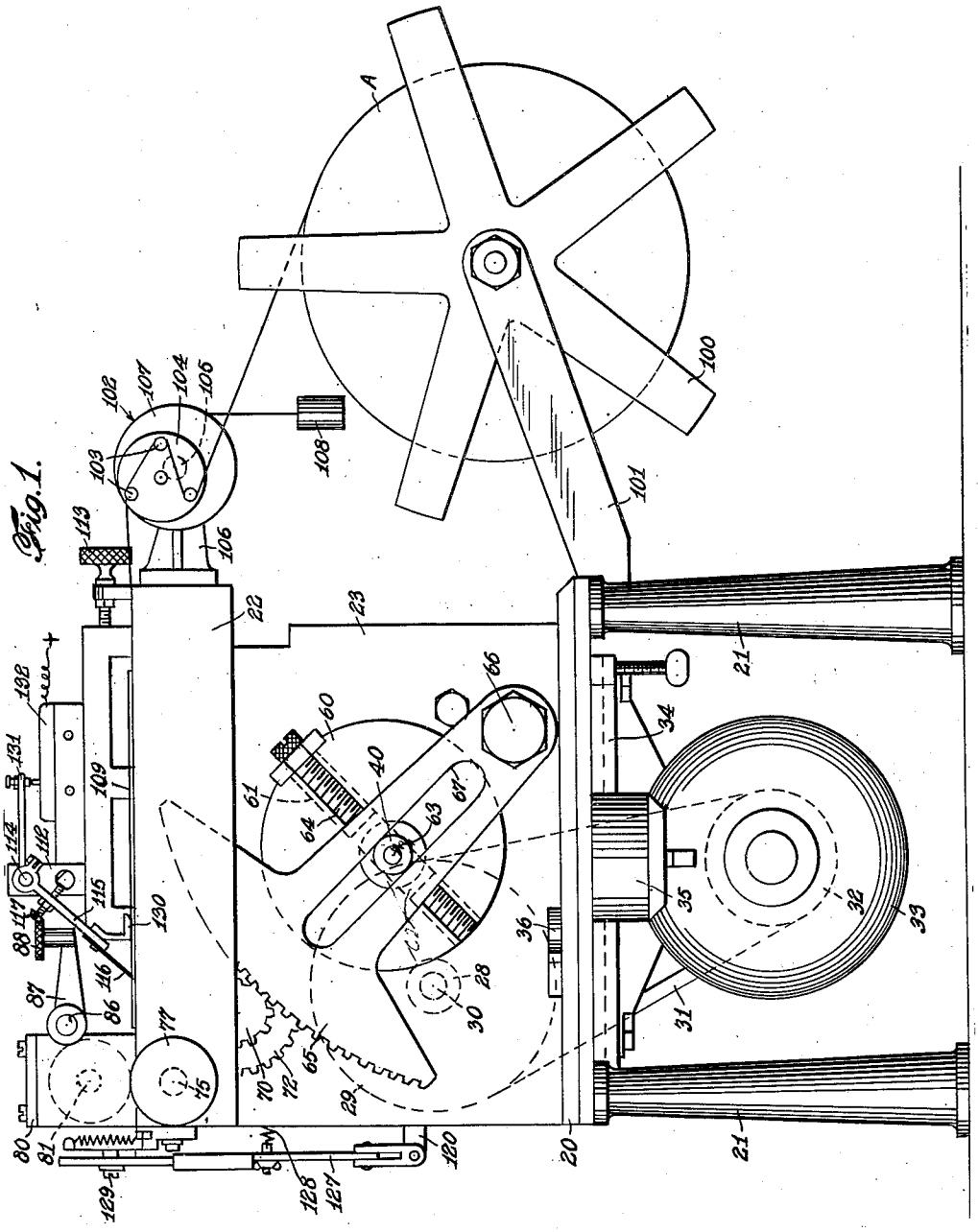

INVENTOR.
EDWARD J. HUBELMEYER

BY
E. W. Marshall
ATTORNEY.

March 21, 1950 E. J. HUBELMEYER 2,501,334

LABEL-CUTTING MACHINE

Filed Sept. 7, 1946 7 Sheets-Sheet 2

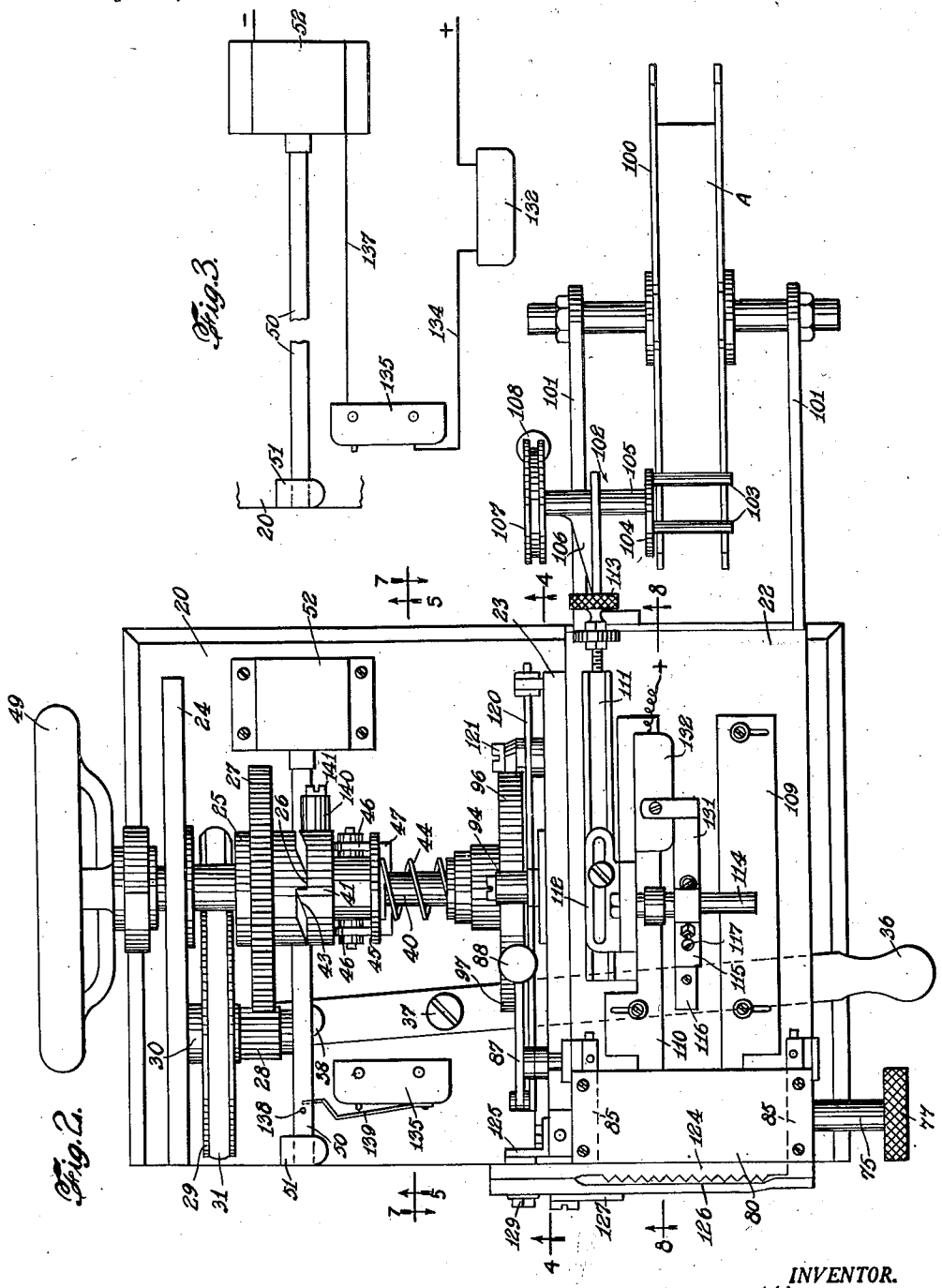

INVENTOR.
EDWARD J. HUBELMEYER

BY
E. W. Marshall

ATTORNEY.

March 21, 1950 E. J. HUBELMEYER 2,501,334

LABEL-CUTTING MACHINE

Filed Sept. 7, 1946 7 Sheets-Sheet 3

Fig. 5.

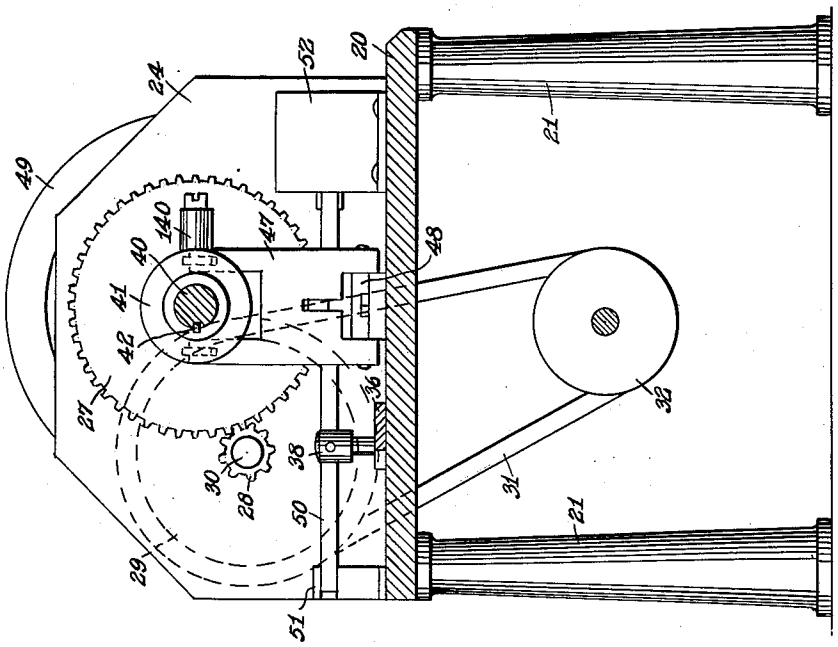

Fig. 4.

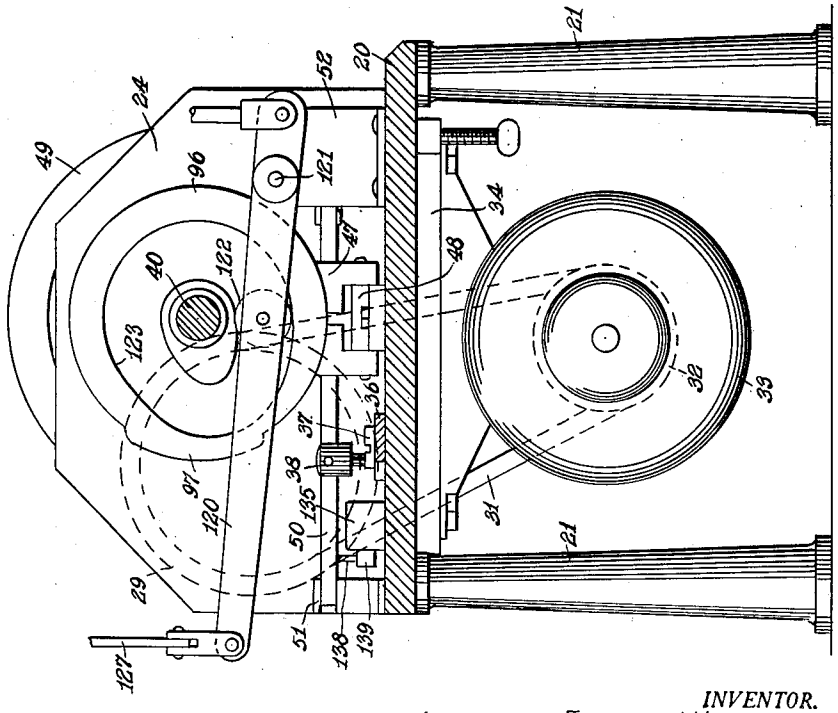

INVENTOR.
EDWARD J. HUBELMEYER

BY
E. W. Marshall

ATTORNEY.

March 21, 1950 E. J. HUBELMEYER 2,501,334

LABEL-CUTTING MACHINE

Filed Sept. 7, 1946 7 Sheets-Sheet 4

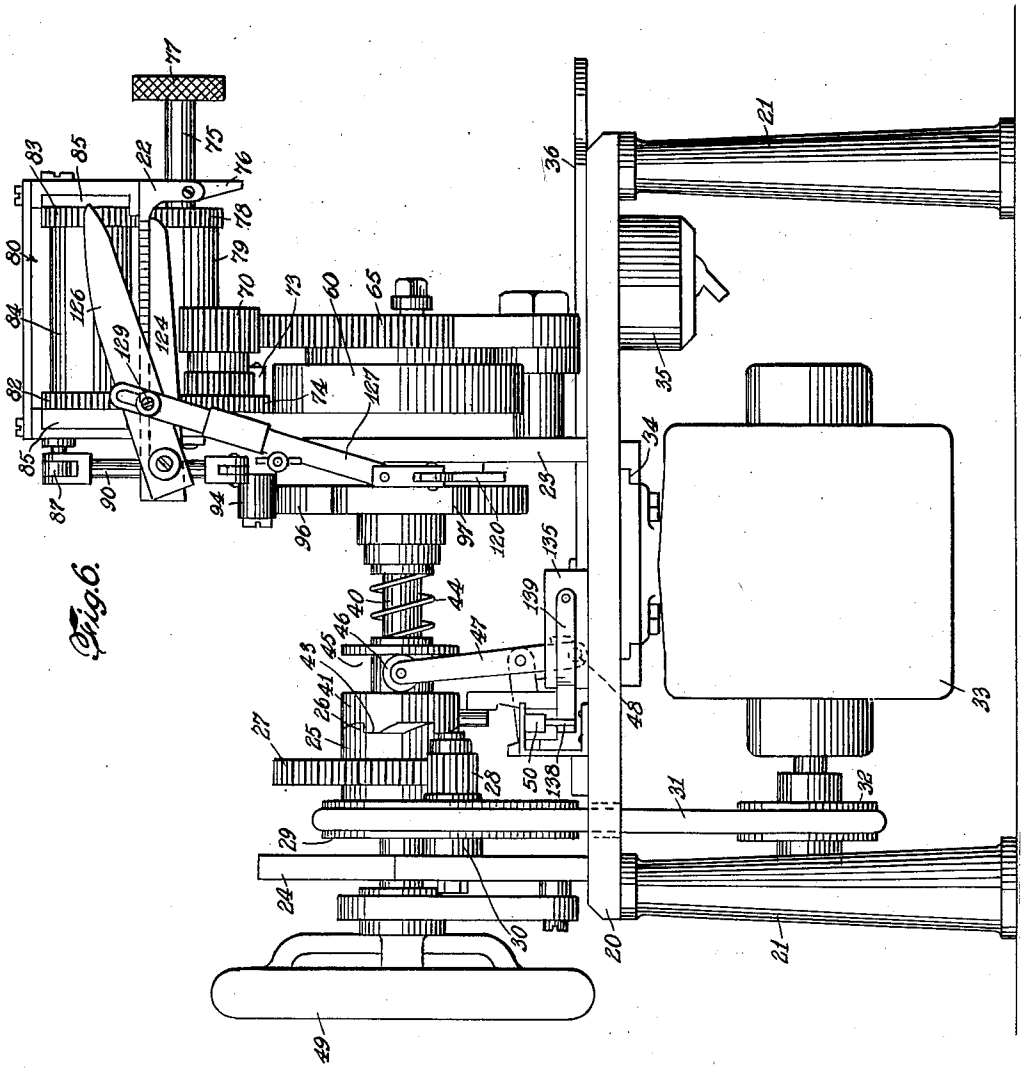

Fig. 6.

INVENTOR.
EDWARD J. HUBELMEYER
BY
E. W. Marshall
ATTORNEY

March 21, 1950 E. J. HUBELMEYER 2,501,334

LABEL-CUTTING MACHINE

Filed Sept. 7, 1946 7 Sheets-Sheet 5

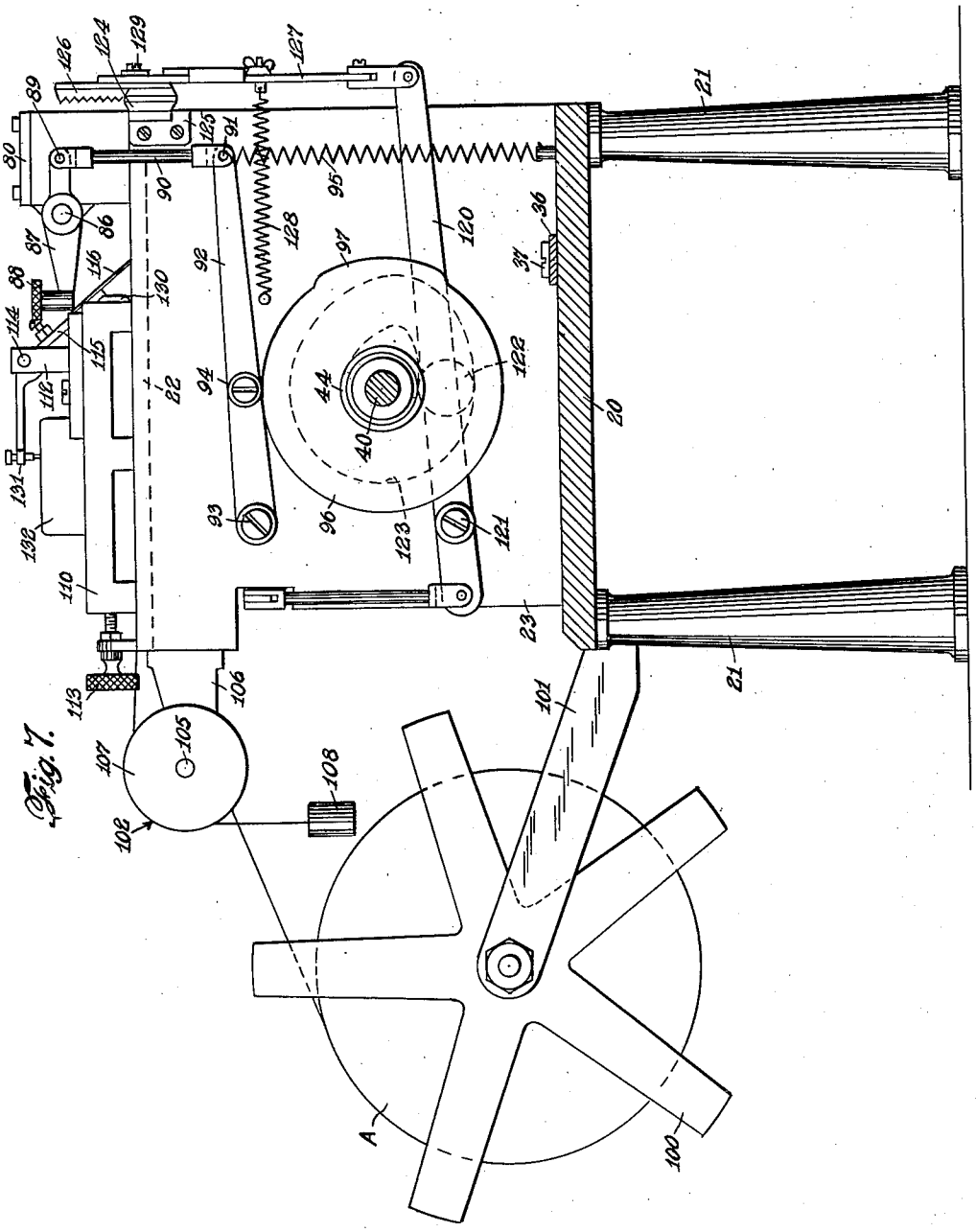

INVENTOR.
EDWARD J. HUBELMEYER

BY E. W. Marshall

ATTORNEY.

March 21, 1950 E. J. HUBELMEYER 2,501,334

LABEL-CUTTING MACHINE

Filed Sept. 7, 1946 7 Sheets-Sheet 6

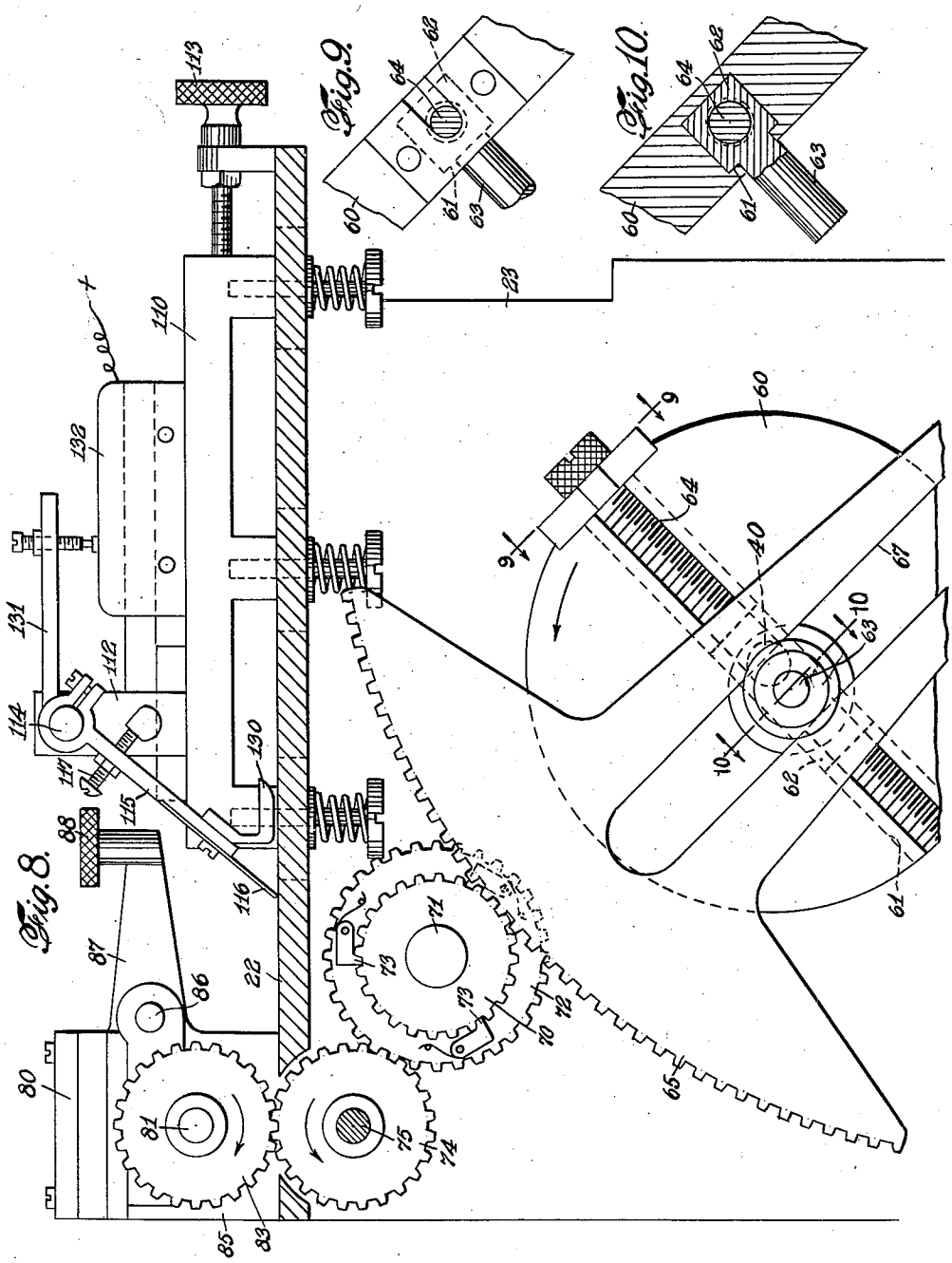

INVENTOR.
EDWARD J. HUBELMEYER

BY E. W. Marshall

ATTORNEY.

March 21, 1950 E. J. HUBELMEYER 2,501,334

LABEL-CUTTING MACHINE

Filed Sept. 7, 1946 7 Sheets-Sheet 7

Fig. 11.

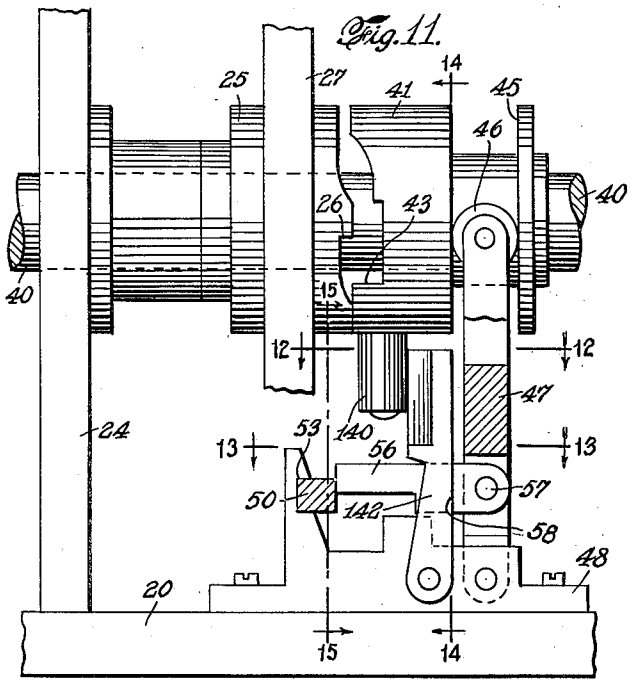

Fig. 14.

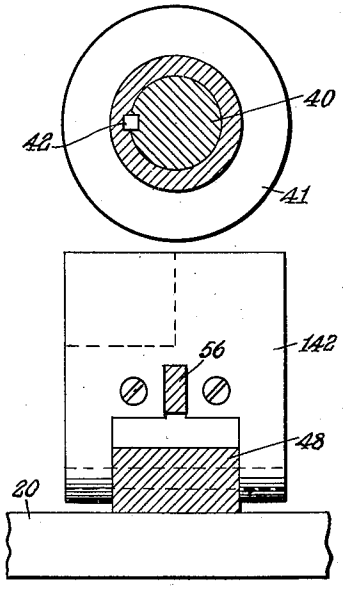

Fig. 12.

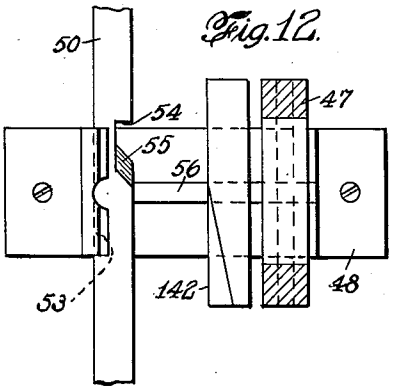

Fig. 13.

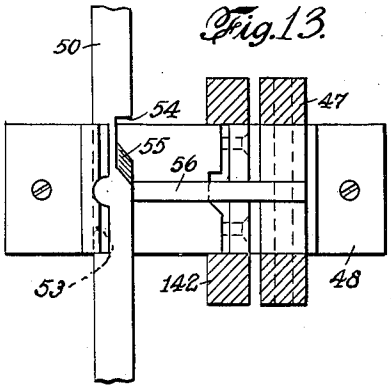

Fig. 15.

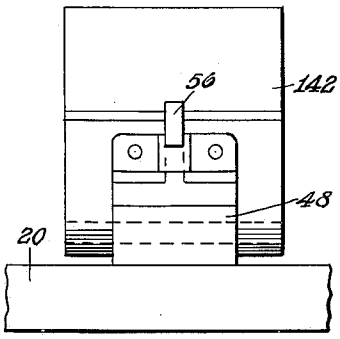

INVENTOR
EDWARD J. HUBELMEYER
BY E. W. Marshall
ATTORNEY.

Patented Mar. 21, 1950 2,501,334

UNITED STATES PATENT OFFICE

2,501,334

LABEL-CUTTING MACHINE

Edward J. Hubelmeyer, Little Ferry, N. J., assignor to J. & H. Label Processing Corp., Little Ferry, N. J., a corporation of New Jersey

Application September 7, 1946, Serial No. 695,344

14 Claims. (Cl. 164—42)

1

This invention relates to a label cutting machine, and its object is to provide an improved mechanism for accurately and rapidly cutting cloth or fabric label strips into separate labels. Such label strips have woven, embroidered or printed thereon a succession of like indicia or identifying marks indicating the trade name of the articles to which they are to be applied, or the name of the maker of the articles or of the dealer. Although such labels are of approximately equal lengths, their lengths vary somewhat because of inaccuracies in the process of manufacturing them. The strip must be cut accurately between the labels on the strip so that such matter will be exactly centered on each of the severed labels. In order to accomplish this result, it is necessary to provide a positive propelling mechanism for intermittently feeding the strip longitudinally, which is coordinated with a cutter for severing the strip transversely and which can be adjusted with great nicety to feed labels of different lengths. More specifically, the object of this invention is to provide a motor-driven machine which will perform the aforesaid functions rapidly with a minimum of attendance. To that end I have arranged a manually operable mechanism for causing the machine to stop whenever desired, and for arresting its parts in positions in which adjustments can be made rapidly, or new material to be cut may be inserted. The arresting mechanism is arranged to lock the parts in such positions for the sake of safety.

I have arranged also to prevent injury to the cutter and other parts of the machine whenever foreign matter is brought into it by the strip, by providing an automatic electro-mechanical stopping arrangement.

These and other objects of the invention will appear in the following specification, in which what I now consider a preferred embodiment of the invention will be described and its novel features defined in claims.

Referring to the drawings,

Fig. 1 is a side elevation of a machine which is made according to and embodies my invention;

Fig. 2 is a plan view of the machine shown in Fig. 1;

Fig. 3 is a wiring diagram, showing how some of the parts shown in Fig. 2 are electrically interconnected;

Figs. 4 and 5 are sectional side elevations of the machine shown in the preceding figures, the sections being taken respectively on the lines 4—4 and 5—5 of Fig. 2;

2

Fig. 6 is a front end elevation;

Fig. 7 is a sectional side elevation, showing the back of the machine. The section in this figure is taken on the line 7—7 of Fig. 2;

Fig. 8 is a sectional side elevation of a portion of the machine, showing some of its parts on an enlarged scale. This section is taken on the line 8—8 of Fig. 2;

Figs. 9 and 10 are sectional views of parts shown in Fig. 8, the sections being taken on the lines 9—9 and 10—10 of the latter figure;

Fig. 11 is a front end elevation of the clutch release mechanism;

Figs. 12 and 13 are sectional plan views of the parts shown in Fig. 11, the sections being taken on the lines 12—12 and 13—13 of the latter figure;

Fig. 14 is a sectional side elevation, taken from the line 14—14 in Fig. 11; and

Fig. 15 is a similar view, taken from the line 15—15 in Fig. 11.

The machine comprises a bed 20 supported on pedestals 21, and an upper feed table 22 supported on spaced vertical plates 23, 24 secured to the bed. 40 is the main shaft of the machine running in bearings on the plates 23, 24. 49 is a hand wheel on an end of shaft 40. 25 is a clutch member rotatively mounted on the shaft 40 and having teeth 26 on one of its ends. 27 is a gear formed integrally on the clutch member 25 in mesh with a pinion 28 which extends from a pulley 29 on a stub shaft 30. A belt 31 connects the pulley 29 with a pulley 32 on the shaft of a motor 33. The motor is slidably supported in guides 34 under the bed 20. 35 is an electric switch for the motor current.

41 is a clutch member splined to the shaft 40, as at 42, and slidable thereon. This member has teeth 43 which cooperates with the teeth 26 when pressed into engagement with them by a spring 44. 45 is a groove in the member 41, in which are diametrically opposed rollers 46, 46 near one end of a bifurcated plate on lever 47, the other end of which is pivotally mounted in a bracket 48 mounted on the bed 20.

50 is a bar disposed at right angles to the axis of the shaft. One end of this bar is slidably mounted in a bearing 51 on the bed 20. Its other end is connected to the core of a solenoid 52, which is affixed to the bed 20. Intermediate its ends, the bar slides in a groove in the bracket 48, as shown at 53 in Fig. 11. A notch 54 is cut in the side of the bar opposite the groove 53, one end of which forms an inclined cam surface 55. 56 is a rod pivoted to the lever 47 at 57 and

extending into the notch 54 when the clutch members 25 and 41 are in engagement, and extending to the side of the bar 50 when they are out of engagement, as shown in Figs. 11–13.

A hand lever 36 is pivoted to the bed 20 at 37. This is connected to the bar 50 at 38. When the bar 50 is moved to the left, as viewed in Fig. 2, the clutch member 41 will be forced into engagement with the motor-driven clutch member 25 by the spring 44, and the shaft 40 will be driven by the motor 33. The clutch members may be separated by swinging the hand lever to the left, as viewed in Fig. 2, to move the bar 50 to the right. This will cause the cam 55 in the side of the bar to engage the proximate end of the rod 56 to move the lever 47 and the clutch member 41 against the action of the spring 44, to the positions in which they are shown in Figs. 11–13 and disconnect the motor-driven clutch member.

Strip feed.—60 is a disk affixed to the shaft 40 near one of its ends and in front of the plate 23. An undercut groove 61 is cut diametrically across the outer face of this disk. 62 is a block slidably mounted in the groove, from which a pin 63 projects. 64 is an adjusting screw, which passes through a threaded hole in the block. 65 is a toothed sector, pivoted at 66 to the plate 23. In it is a radially disposed elongated slot 67, into which the pin 63 extends. By this arrangement rotation of the disk 60 imparts a reciprocating movement to the sector 65 when the pin 63 is out of axial alinement with the shaft. The stroke of this reciprocation can be adjusted from zero to the full length of the toothed arc of the sector.

The sector teeth engage those of a pinion 70 loosely mounted on a shaft 71 which projects from the plate 23. This pinion is rotated in opposite directions by the reciprocation of the sector 65. 72 is a gear on the shaft 71, on which are pawls 73, which are spring-pressed into engagement with the teeth of pinion 70 (see Fig. 8). By this arrangement an intermittent rotation is imparted to the gear 72. A gear 74 affixed to a shaft 75 is in mesh with the gear 72. One end of shaft 75 runs in a bearing supported on the plate 23. It extends through a bracket 76 on the outer edge of the feed table 22, and has a knurled knob 77 affixed. 78 is another gear affixed to the shaft 75 inside the bracket 76 and spaced from the gear 74. Between the gears 74 and 78 is a feed roll 79 (Fig. 6).

80 is a housing affixed to the feed table and adjustably supporting a shaft 81 parallel with and above the shaft 75. Gears 82, 83 on shaft 81 respectively engage the gears 74 and 78, and between them is a feed roll 84 (Fig. 6). The shaft 81 runs in bearings in side plates 85, 85, which are affixed to a shaft 86 mounted on one side of the housing 80. 87 is a rocker arm affixed to shaft 86. On one of its ends is a knob 88, by means of which the rocker arm may be depressed to raise the side plates 85, 85 and release the pressure between the feed rolls 79 and 84.

90 is a connecting rod pivotally connected to the other end of the rocker arm 87 at 89 (Fig. 7). The lower end of the connecting rod is connected at 91 to one end of a lever 92, which is pivoted at 93 to the plate 23. Intermediate the ends of lever 92 is a roller 94. 95 is a tension spring between the connected ends of the rod 90 and lever 92 and the bed 20. This tends to move the feed roll 84 toward the feed roll 79, and this movement is limited by the engagement of the roller 94 with the periphery of a cam wheel 96 on the main shaft 40. The cam wheel has a slightly raised portion 97 which, by engaging the roller 94, releases the pressure between the feed rolls during a part of the cycle of operation of the machine.

100 is a reel rotatively mounted on brackets 101 projecting from the bed 20, for holding a roll A of label strips. The strip is led through a tensioning device, designated generally by the reference numeral 102, which comprises angularly spaced pins 103, around which the strip passes, projecting from a disk 104, which is mounted eccentrically on a shaft 105 rotatively supported in a bracket 106 on the end of the feed table 22. A pulley 107 is affixed to the shaft 105, and a weight 108 is suspended from the pulley 107 by a cord. This arrangement imposes a resistance to the passage of the strip through it.

The strip is led across the top of the feed table to and between the feed rolls 79 and 84. On the feed table the strip passes between side guides 109 and 110, which are laterally adjustable to accommodate strips of different widths and are fastened to the feed table. On the side guide 110 is a longitudinal slot 111, in which a head 112 is adjustably mounted. Its position is adjusted by means of a knob 113. 114 is a pin which projects from the head 112 across the space between the side guides. 115 is an arm of a bell crank lever on the pin 114, from the lower end of which a flat blade 116 projects. This arm swings by gravity toward the feed table, and its downward movement is limited by an adjusting screw 117, which engages a projection from the side of the head 112 (see Fig. 8).

The operation of the strip feed mechanism is as follows: The strip is led from the reel 100 through the tensioning device 102 and across the feed table to the feed rolls 79, 84. It passes under the blade 116, which is adjusted to touch the strip lightly. By depressing the knob 88 the feed rolls are separated sufficiently to permit the insertion of the strip between them. Then when the knob 88 is released the spring 95 pulls the feed rolls together to engage the strip. The strip may be then adjusted by turning the knob 77.

When the clutch is closed the first movement of the feed rolls draws the strip along the length of one of the labels. The blade 116, because it is inclined, prevents the strip from retracting beyond a desired amount. When the labels are embroidered on the strips the indicia thereon project slightly above the upper surfaces of the strips. With such strips the driving mechanism for the feed rolls is adjusted to feed the strips linear distances slightly greater than the length of the individual labels. Then, when the upper feed roll is raised automatically at the end of each feed stroke, or manually by depressing the knob 88, the tension device draws the strip back until its movement is arrested by a part of the indicia thereon reaching the blade 116. In some cases, cut-off lines are woven into the strips at equal intervals to effect this automatic adjustment of the position of the labels. When the labels are printed on the strips the desired adjustment may be made by hand.

The cutting mechanism.—A lever 120 pivoted at 121 on the plate 23 carries a roller 122, which projects into a cam groove 123 in the side of the cam wheel 96. During each revolution of the main shaft 40, this lever is depressed. 124 is a stationary shear blade affixed to the plate 23 by a bracket 125, with its cutting edge approxi-

mately level with the upper surface of the feed table 22. 126 is a shear blade pivotally mounted on the bracket 125. Both of the shear blades have crimping teeth. The movable shear blade is connected with the lever 120 by a connecting bar 127, which is made in two sections so that its length may be adjusted. A tension spring 128 exerts an inward pressure on the connecting bar to draw the two shearing blades together. The upper section of the bar 127 is connected with the movable shear blade 126 by a pin-and-slot arrangement at 129, so that the stroke of the bar may be somewhat greater than that of the shear blade.

Automatic stop.—A shoe 130 is adjustably attached to the under side of the lever 115. This is set so that when the blade 116 is in contact with the label strip the lower surface of the shoe is in close proximity to the upper surface of the label strip. When any foreign substance is carried into the machine by the label strip, such, for example, as a pin interconnecting two label strips, it will contact the shoe 130 and raise the lever 115. 131 is an arm extending from the pivoted end of the lever 115 to a normally open micro-switch 132. A conductor from a source of electrical supply, designated by + in Figs. 1 and 3, is connected to the switch 132. Another conductor, 134, runs from the switch 132 to a normally closed micro-switch 135, which is connected by a conductor 137 to a terminal of the solenoid 52, the other terminal of which is connected to a conductor — from the electrical supply. When the arm 131 is depressed, a circuit is closed through the solenoid 52, which pulls its armature and the bar 50 to the right, as viewed in Figs. 2–5, and by the mechanism previously described, opens the clutch. Then, a pin 138 on the bar 50 engages a spring 139 and opens the micro-switch 135 and breaks the solenoid circuit.

It has been shown that when the bar 50 is moved to the right by the hand lever 36 or by the solenoid 52, the clutch member 41 will be moved against the action of the spring 44, out of engagement with the clutch member 25. A roller 140 on a pin 141 which projects radially from the clutch member 41 will then travel in a path which will cause it to engage the upper part of a cam plate 142, which is pivoted in the bracket 48. When the clutch is first disengaged, the momentum of the parts connected with the main shaft 40 will cause the shaft to rotate until such movement is arrested by the engagement of the roller 140 with the cam plate. The parts on the main shaft or driven thereby are so positioned in relation to the roller 140 that when the movement of the shaft is thus arrested, the shear blade 126 will be raised, the feed rolls 77, 84 will be at rest, and the pressure between the feed rolls will be released, so that desired adjustments of the machine or of the label strip may be made readily without stopping the motor 33.

Safety lock.—When the roller 140 is in engagement with the cam plate 142, the latter will be pressed to the right, as viewed in Figs. 11–13. The cam plate then engages a shoulder 58 on the rod 56, so that the spring 44 cannot move the clutch member 41 or the lever 47 to the left, even after the bar 50 has been shifted to the left. Thus, the machine is locked, so that an operator can make all desired adjustments without danger of having his hands caught in any moving part of the machine. This condition will remain until the roller 140 is moved away from its contact with the cam plate 142, which can be done by turning the hand wheel 49.

The objects set forth at the beginning of this specification are accomplished by the mechanisms described.

Various modifications in construction, mode of operation, use and method of an invention may, and often do, occur to others, especially after benefiting from knowledge of such a disclosure as that herein presented of the principles involved, but the invention itself is not confined to the present showing.

I claim:

1. In a machine of the character described, a pair of feed rolls arranged to advance a label strip intermittently, means for exerting a resilient pressure between the rolls, means for exerting a tension on the label strip when it is advanced, a shearing mechanism, means for rotating the rolls intermittently and actuating the shearing mechanism during periods of rest of the feed rolls, automatic means for releasing the pressure between the rolls during each cycle of the operation, and means for arresting retraction of the label strip when the pressure between the rolls is released.

2. In a machine of the character described, a pair of feed rolls, means for exerting a tension on the label strip when it is advanced, a shearing mechanism, means for rotating the rolls intermittently and actuating the shearing mechanism during periods of rest of the feed rolls, automatic means for releasing the pressure between the rolls during each cycle of the operation, means for separating the rolls manually when the machine is at rest, and means for arresting retraction of the label strip when the pressure between the rolls is released and when the rolls are separated.

3. In a machine of the character described, a pair of feed rolls, a shaft, a disk affixed to the shaft, a motor-driven member rotatively mounted on the shaft, means for operatively connecting said member with the shaft, a block diametrically guided on the disk, a pin projecting from the block, a pivotally mounted reciprocating toothed sector overlapping the disk having a radially disposed slot therein into which the pin projects, a shearing mechanism, gearing interconnecting the sector with the feed rolls and with the shearing mechanism, a hand lever for releasing the connection of said member with the shaft, and automatic means for arresting the movement of the disk when the member is released and the shearing mechanism is open.

4. In a machine of the character described, a pair of feed rolls, a shearing mechanism, means for alternately rotating the feed rolls and to close and open the shearing mechanism intermittently, a clutch comprising a motor-driven member rotatively mounted on the shaft, and a slidable member splined to the shaft, said roll-rotating and shearing mechanism means comprising a disk affixed to the shaft, a block diametrically guided on the disk, a pin projecting from the block, a pivotally mounted reciprocating toothed sector overlapping the disk having a radially disposed slot therein into which the pin projects, a hand lever for reciprocating the clutch member, and automatic means for arresting the movement of the disk when the shearing mechanism is open.

5. In a machine of the character described, a pair of feed rolls, a shearing mechanism, means for alternately rotating the feed rolls and to close and open the shearing mechanism intermittently,

a clutch comprising a motor-driven member rotatively mounted on the shaft, and a slidable member splined to the shaft, said roll-rotating and shearing mechanism means comprising a disk affixed to the shaft, a block diametrically guided on the disk, a pin projecting from the block, a pivotally mounted reciprocating toothed sector overlapping the disk having a radially disposed slot therein into which the pin projects, a hand lever for reciprocating the clutch member, automatic means for arresting the movement of the disk when the shearing mechanism is open, and means for rotating the shaft and the disk manually when the clutch members are released.

6. In a machine of the character described, a pair of feed rolls, means for exerting a resilient pressure between the rolls, a shearing mechanism, means for alternately rotating the feed rolls and to close and open the shearing mechanism intermittently, a clutch comprising a motor-driven member rotatively mounted on the shaft, and a slidable member splined to the shaft, said roll-rotating and shearing mechanism means comprising a disk affixed to the shaft, a block diametrically guided on the disk, a pin projecting from the block, a pivotally mounted reciprocating toothed sector overlapping the disk having a radially disposed slot therein into which the pin projects, a hand lever for reciprocating the clutch member, automatic means for arresting the movement of the disk when the shearing mechanism is open, means for rotating the shaft and the disk manually when the clutch members are released, and manually actuated means for separating the rolls.

7. A driving mechanism for a machine for feeding and cutting label strips, which has alternately actuated feed rolls and a severing device, said mechanism comprising a shaft operatively connected with the feed rolls and cutting device, a clutch having a motor-driven member rotatively supported on the shaft, and a second member splined to the shaft and slidably supported thereon, resilient means for moving said splined member into engagement with the rotatively supported member, a lever arranged to move the splined member out of engagement with the rotatively supported member, means for actuating said lever automatically to release the clutch members, said means comprising a cam bar transversely disposed in relation to the shaft, a solenoid, operative connections between the bar and the solenoid, and means adjacent the feed rolls for energizing the solenoid.

8. A driving mechanism for a machine for feeding and cutting label strips, which has alternately actuated feed rolls and a severing device, said mechanism comprising a shaft operatively connected with the feed rolls and cutting device, a clutch having a motor-driven member rotatively supported on the shaft, and a second member splined to the shaft and slidably supported thereon, resilient means for moving said splined member into engagement with the rotatively supported member, a lever arranged to move the splined member out of engagement with the rotatively supported member, means for actuating said lever automatically to release the clutch members, said means comprising a cam bar transversely disposed in relation to the shaft, a solenoid, a circuit therefor, operative connections between the bar and the solenoid, and a micro-switch in the solenoid circuit adjacent the feed rolls.

9. A driving mechanism for a machine for feeding and cutting label strips, which has alternately actuated feed rolls and a severing device, said mechanism comprising a shaft operatively connected with the feed rolls and cutting device, a clutch having a motor-driven member rotatively supported on the shaft, and a second member splined to the shaft and slidably supported thereon, resilient means for moving said splined member into engagement with the rotatively supported member, a lever arranged to move the splined member out of engagement with the rotatively supported member, means for actuating said lever manually, means for actuating said lever automatically to release the clutch members, said automatic means comprising a cam bar transversely disposed in relation to the shaft, a solenoid, operative connections between the bar and the solenoid, and means adjacent the feed rolls for energizing the solenoid.

10. A driving mechanism for a machine for feeding and cutting label strips, which has alternately actuated feed rolls and a severing device, said mechanism comprising a shaft operatively connected with the feed rolls and cutting device, a clutch having a motor-driven member rotatively supported on the shaft, and a second member splined to the shaft and slidably supported thereon, resilient means for moving said splined member into engagement with the rotatively supported member, a lever arranged to move the splined member out of engagement with the rotatively supported member, means for actuating said lever manually, means for actuating said lever automatically to release the clutch members, said automatic means comprising a cam bar transversely disposed in relation to the shaft, a solenoid, a circuit therefor, operative connections between the bar and the solenoid, means for energizing the solenoid, and a micro-switch in the solenoid circuit adjacent the feed rolls.

11. A driving mechanism for a machine for feeding and cutting label strips, which has alternately actuated feed rolls and a severing device, said mechanism comprising a shaft operatively connected with the feed rolls and cutting device, a clutch having a motor-driven member rotatively supported on the shaft, and a second member splined to the shaft and slidably supported thereon, resilient means for moving said splined member into engagement with the rotatively supported member, a lever arranged to move the splined member out of engagement with the rotatively supported member, means for actuating said lever automatically to release the clutch members, said means comprising a cam bar transversely disposed in relation to the shaft, a solenoid, a circuit therefor, operative connections between the bar and the solenoid, a normally open micro-switch in the solenoid circuit adjacent the feed rolls arranged to close said circuit, and a normally closed switch in said circuit arranged to be opened by the movement of the cam bar.

12. In a machine of the character described, a pair of feed rolls, driving mechanism operatively connected with the feed rolls, a plate on which a label strip is guided to the feed rolls, and electro-responsive means for disconnecting the driving mechanism from the feed rolls, said means comprising a micro-switch having a finger disposed above the plate in close proximity to the label strip thereon.

13. A driving mechanism for a machine for feeding and cutting label strips, which has alternately actuated feed rolls and a severing device, said mechanism comprising a shaft operatively

connected with the feed rolls and cutting device, a clutch having a motor-driven member rotatively supported on the shaft, and a second member splined to the shaft and slidably supported thereon, resilient means for moving said splined member into engagement with the rotatively supported member, a lever arranged to move the splined member out of engagement with the rotatively supported member, means for actuating said lever, a pivoted cam plate having a beveled surface, a pin projecting from the splined clutch member arranged to move in a path clear of the cam plate when the clutch members are in engagement and in a path to engage and move the cam plate when the splined clutch member is moved out of engagement with the rotatively supported clutch member, and means for imparting the movement of the cam plate to the clutch release lever.

14. A driving mechanism for a machine for feeding and cutting label strips, which has alternately actuated feed rolls and a severing device, said mechanism comprising a shaft operatively connected with the feed rolls and cutting device, a clutch having a motor-driven member rotatively supported on the shaft, and a second member splined to the shaft and slidably supported thereon, resilient means for moving said splined member into engagement with the rotatively supported member, a lever arranged to move

the splined member out of engagement with the rotatively supported member, means for actuating said lever automatically to release the clutch members, said means comprising a bar slidable transversely in relation to the shaft, having a cam surface indented in one of its sides, a link extending from the clutch release lever into said indented cam surface, and electro-responsive means for sliding the bar to move the end of the link out of said indented cam surface onto said side of the bar to move the clutch release lever and to lock the splined clutch member out of engagement with the rotatively supported clutch member.

EDWARD J. HUBELMEYER.

REFERENCES CITED

The following references are of record in the file of this patent:

UNITED STATES PATENTS

Number	Name	Date
110,631	Coffin	Jan. 3, 1871
332,138	Cox	Dec. 8, 1885
734,215	Bilgram	July 21, 1903
841,834	Webber	Jan. 22, 1907
1,235,805	Jennings	Aug. 7, 1917
1,718,145	Hartman	June 18, 1929
1,787,657	Andren et al.	Jan. 6, 1931
2,197,043	Guyer et al.	Apr. 16, 1940