Office de la Propriété Intellectuelle du Canada
Un organisme d'Industrie Canada

Canadian Intellectual Property Office
An agency of Industry Canada

CA 2875511 C 2017/09/19

(11)(21) 2 875 511

(12) BREVET CANADIEN
CANADIAN PATENT

(13) C

(22) Date de dépôt/Filing Date: 2014/12/22

(41) Mise à la disp. pub./Open to Public Insp.: 2015/08/04

(45) Date de délivrance/Issue Date: 2017/09/19

(30) Priorités/Priorities: 2014/02/04 (CA2815885); 2014/02/04 (CA2841506); 2014/10/06 (CA2866044)

(51) Cl.Int./Int.Cl. *E21D 20/00* (2006.01), *E21B 7/02* (2006.01)

(72) Inventeurs/Inventors:
VOGEL, TRAVIS, CA;
BJARNASON, TYRELL, CA;
PLETZ, MICHAEL, CA;
STILBORN, MITCH, CA

(73) Propriétaire/Owner:
BRANDT ENGINEERED PRODUCTS LTD., CA

(74) Agent: MLT AIKINS LLP

(54) Titre : MACHINE A BOULONNAGE DE TOIT ET APPAREIL
(54) Title: ROCK BOLTING MACHINE AND APPARATUS

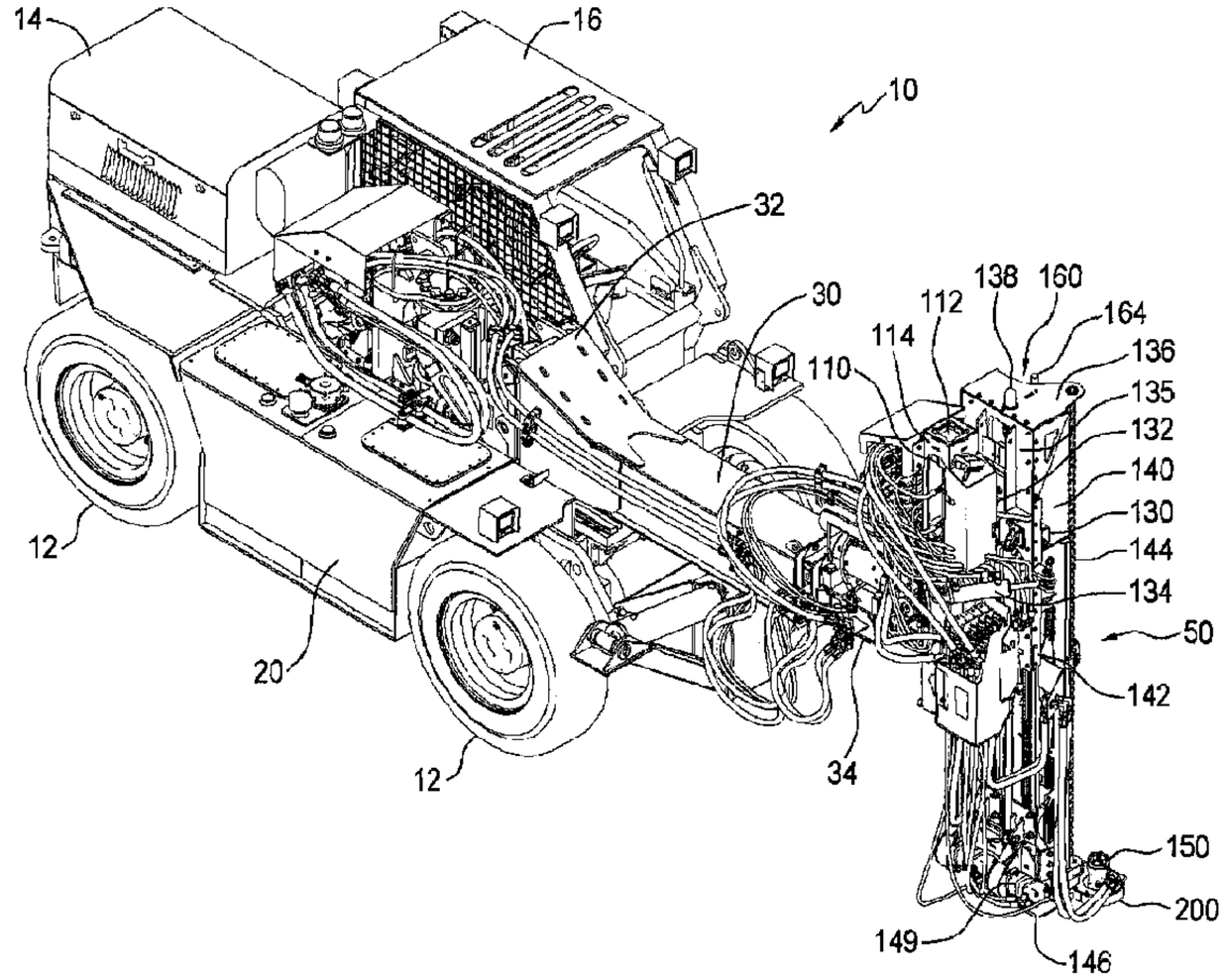

(57) Abrégé/Abstract:
A rock bolting machine for installing a rock bolt in a roof of an underground space is provided. The rock bolting machine can include a vehicle and a boom. A rock bolting assembly can be attached to the boom. The rock bolting assembly can have a drill bolt mast with a frame, a drilling portion adapted to drill a bolt hole and a bolting portion adapted to secure the rock bolt in the bolt hole. The drilling portion can have a drill rod, a drive unit and a drill motor, where the drive unit comprises an input on a top or the drive unit and an output on the top of the drive unit. The input of the drive unit can be connected to the drill motor and the output connected to a bottom end of the drill rod.

ABSTRACT

A rock bolting machine for installing a rock bolt in a roof of an underground space is provided. The rock bolting machine can include a vehicle and a boom. A rock bolting assembly can be attached to the boom. The rock bolting assembly can have a drill bolt mast with a frame, a drilling portion adapted to drill a bolt hole and a bolting portion adapted to secure the rock bolt in the bolt hole. The drilling portion can have a drill rod, a drive unit and a drill motor, where the drive unit comprises an input on a top of the drive unit and an output on the top of the drive unit. The input of the drive unit can be connected to the drill motor and the output connected to a bottom end of the drill rod.

ROCK BOLTING MACHINE AND APPARATUS

The present invention relates to a rock bolting machine that includes a vehicle and more particularly to a rock bolting apparatus and a drive unit that is used to drill a bolt hole and install a rock bolt in a roof of an underground space.

BACKGROUND

Rock bolts are installed in the roofs of mines, tunnels and other underground spaces for securing the roof of the mine in place and preventing the roof from collapsing when the mine is in use and workers may be in the mine. Holes are drilled in the mine roof and then a rock bolt is secured in the drilled hole.

Installing rock bolts can be done manually by having workers first drill a hole with a rock drill and then install a rock bolt. However, more often, rock bolts are now installed by a machine that incorporates a vehicle.

SUMMARY OF THE INVENTION

In one aspect, a rock bolting machine for drilling a bolt hole in a roof of an underground space and installing a rock bolt in the bolt hole is provided. The rock bolting machine comprises: a vehicle; a boom having a first end attached to the vehicle and a second end extending in front of the vehicle; and a rock bolting assembly attached to the second end of the boom. The rock bolting assembly can have a drill bolt mast with a frame, a drilling

portion adapted to drill the bolt hole and a bolting portion adapted to secure the rock bolt in the bolt hole.

In a further aspect, the drilling portion of the rock bolting machine can have a drill rod, a drive unit and a drill motor, where the drive unit comprises an input on a top of the drive unit and an output on the top of the drive unit. The input of the drive unit can be operatively connected to the drill motor and the output of the drive unit operatively connected to a bottom end of the drill rod.

In a further aspect, the rock bolting machine can have a pick extendable out a top of the rock bolting assembly. The pick can be adapted to engage the roof of the underground space to hold the rock bolting assembly in place.

DESCRIPTION OF THE DRAWINGS

An embodiment of the present invention is described below with reference to the accompanying drawings, in which:

FIG. 1 is a perspective view of a rock bolting machine;

FIG. 2 is a top view of the rock bolting machine showing the side to side motion of a rock bolting apparatus provided on a boom of the rock bolting machine;

FIG. 3 is a side view of the rock bolting machine showing the up and down motion to the rock bolting apparatus provided on the boom of the rock bolting machine;

FIG. 4 is a front view of the rock bolting machine;

FIG. 5 is a side view of the rock bolting machine;

FIG. 6 is a close up view of the bottom end of a drill bolt mast;

FIG. 7 is a view of a drive unit used to drive a drill rod; and

FIG. 8 is a view of the drive unit of FIG. 7 with a cover removed to show the internal components of the drive unit.

DETAILED DESCRIPTION OF THE ILLUSTRATED EMBODIMENTS

FIG. 1 illustrates a rock bolting machine 10 that is used to travel in a mine or other underground space and install rock bolts in the roof of the underground space. The rock bolting machine 10 can comprise a vehicle 20 and a rock bolting assembly 50 connected to the vehicle 20 by a boom 30. The boom 30 can extend out in front of the vehicle 2020 so that the rock bolting assembly 50 attached to the boom 30 is positioned out in front of the vehicle 20. An operator can maneuver the rock bolting machine 10 so that the rock bolting assembly 50 is positioned under a spot on the roof of the underground chamber where a rock bolt is going to be installed and then the rock bolting assembly 50 can be placed against the roof of the underground space using the boom 30. The rock bolting assembly 50 can be used to first drill a bolt hole for the rock bolt and then install a rock

bolt in the drilled bolt hole. By using the boom 30 to position the rock bolting assembly 50 well out in front of the vehicle 2020, the vehicle 2020 can be operated under a portion of the roof in the underground space that has already been rock bolted.

The vehicle 20can have a number of wheels 12 and an engine 14 so that the vehicle 20is self-propelled. A cab 16 can be provided on the vehicle 20so that an operator can sit in the cab 16 and operate the rock bolting machine 10. In one aspect, the vehicle 20can be hydraulic powered both to drive one or more of the wheels 12 and to drive other hydraulic motors, actuators, etc. used by the rock bolting machine 10 to operate the boom 30 and the rock bolting assembly 50.

The boom 30 can be attached to the vehicle 20 at a first end 32 and to the rock bolting assembly 50 at the second end 34. The first end 32 of the boom 30 can be attached to the vehicle 20 in such a manner that the boom 30 can be pivoted from side to side, as shown in FIG. 2, and up and down, as shown in FIG. 3. The boom 30 can also be telescopically extendable so that the length of the boom 30 can be increased or decreased allowing the rock bolting assembly 50 to be extended away from the vehicle 20 or retracted towards the vehicle 20, as desired by the operator.

The second end 34 of the boom 30 can be connected to the rock bolting assembly 50 so that the boom 30 can be used to move the rock bolting assembly 50 upwards, downwards and from side to side relative to the vehicle 20. The rock bolting assembly 50 can be

rotatably connected to the second end 34 of the boom 30 so that the rock bolting assembly 50 can be pivoted both in a first plane substantially perpendicular to the direction the boom 30 extends in and also pivot in a second plane that lies substantially parallel to the direction the boom 30 extends in. The maneuverability of the boom 30 and the attached rock bolting assembly 50 can allow an operator of the rock bolting machine 10 to use the boom 30 to maneuver the rock bolting assembly 50 to a spot on the roof or the underground chamber where it is desired to install a rock bolt.

FIGS. 4 and 5 shows the rock bolting assembly 50 attached to the second end 34 of the boom 30 that is used to both drill the bolt hole and install the rock bolt in the bolt hole. The rock bolting assembly 50 can include a pick mast 110 and a drill bolt mast 130.

Referring to FIGS. 1, 2 and 4, the pick mast 110 is operatively connected to the second end 34 of the boom 30 and contains a pick 112 that can be extended out of a top of a pick guide 114. The head of the pick 112 can form a point for engaging a roof of an underground space. In one aspect, the extension and retraction of the pick 112 out of the pick guide 114 can be driven by a hydraulic cylinder.

The drill bolt mast 130 can be pivotally connected by a pivot point 132 to the pick mast 110 so that the drill bolt mast 130 can be rotated around this pivot point 132 while the pick mast 110 remains stationary. An actuator 134 can be positioned between the pick

mast 110 and the drill bolt mast 130 to rotate the drill bolt mast 130 around the pivot point 132. In one aspect, the actuator 134 can be a hydraulic cylinder.

The drill bolt mast 130 can have a frame 135 with a top plate 136 and a nub 138 extending upwards above the top plate 136. The nub 138 can be forcibly retracted downwards towards the top plate 136 and is connected to a switch to stop the boom 30 from continuing to move the rock bolt apparatus 50 after the nub 138 has been depressed. In this manner, when the nub 138 is depressed the rock bolt apparatus 50 and specifically the top plate 136 of the drill bolt mast 130 is against the roof of the underground space.

The drill bolt mast 130 can include a drilling portion 140 and a bolting portion 160. The drilling portion 140 is used to first drill a bolt hole in the roof of the underground space and the drill bolt mast 130 is then rotated around the pivot point 132 until the bolting portion 160 lines up with the bolt hole that was drilled by the drilling portion 140 so that the rock bolt 164 in the bolting portion 160 aligns with the bolt hole and the bolting portion 160 is then used to install a bolt in the bolt hole.

The drilling portion 140 can have a drill guide frame 142 that can be moved vertically relative to the frame 135 of the drill mast 130 as well as guide a drill rod 144 as it is rotated and moved upwards relative to the drill guide frame 142. The drill guide frame 142 can extend vertically and be movable so that a top end of the drill guide frame 142 can be positioned against the top plate 136 of the drill bolt mast 130 or moved

downwards to create a space between the top of the drill guide frame 142 and bottom of the top plate 136.

A foot plate 146 can be provided on the bottom of the drill guide frame 142 to protect the elements of the drilling portion 140 from being damaged if the bottom of the drilling portion 140 accidentally comes into contact with the floor of the underground space while the rock bolting apparatus 50 is being maneuvered into place.

As can be better seen in FIG.6, the drill rod 144 can be driven by a drive unit 200 connected to a bottom end 145 of the drill rod 144. The drive unit 200 can be slidably attached to the drill guide frame 142 by guide brackets 206 so that the drive unit 200 can be moved upwards and downwards relative to the drill guide frame 142.

FIG. 7 illustrates the drive unit 200 in one aspect. The drive unit 200 can have a housing 202 and a cover plate 204 with an output 210 and an input 220 provided extending out of the top of the drive unit 200. Guide brackets 206 are provided on the housing so that the drive unit 200 can be slidably attached to the drill guide frame 142. A chain bracket 208 can also be provided that can attach to a chain or belt for moving the drive unit 200 vertically along the drill guide frame 142.

A drill motor 150 can be attached to the input 220 and a drill rod socket 212 can be provided on the output 210 for securely holding the bottom end 145 of the drill rod 144.

FIG. 8 illustrates the drive unit 200 with the cover plate 204 removed from the housing 202. An input gear 224 and an output gear 214 are attached to the input 220 and output 210, respectively. A chain 230 can be provided running between the input gear 224 and the output gear 214 so that rotational motion of the input 220, and therefore the input gear 224, will cause the output gear 214 to rotate and therefore the output 210 to rotate as well.

By varying the size of the input gear 224 and the output gear 214 the drive ratio of the drive unit 200 can be altered. Using an input gear 224 and an output gear 214 of the same size will result in a 1:1 drive ratio, making one larger than the other will alter the rotational speeds. It one aspect, the input gear 224 used could be about twice the size of the output gear 214 resulting in a 2:1 overdrive.

An oil bath (not shown) can be provided to lubricate the chain 230, the bearings for the input gear 224 and the output gear 214, etc.

Referring to FIGS. 6 and 8, because the output 210 will hold a bottom end 145 of the drill rod 144 that will be subjected to both torsional forces, as the drill rod 144 is rotated for drilling into the rock in a roof of a underground space, and thrust forces, as the drill rod 144 is forced upwards to drill the drill hole, a tapered roller bearing 215 can be used to support the output gear 214 and allow the output 210 to resist both torsional and thrust

forces applied to it by the drill rod 144. The input gear 224 can be supported with just a standard roller bearing since it will be subjected to predominately torsional forces only.

The drive unit 200 only has to house the chain 230, the output gear 214, the input gear 224, and some other components such as a chain tensioner 232, oil bath, etc. This allows the drive unit 200 to be made with a relatively low profile, typically just high enough to clear the width of the chain 230.

Referring to FIGS. 6-8, the guide brackets 206 on the drive unit 200 can be connected to the drill guide frame 142 with the chain bracket 208 connected to a chain 148 that runs upwards along the drill guide frame 142 to a pulley positioned close to the top of the drill bolt mast 130 and back to a drill guide motor 149. The drill guide motor 149 can be used to pull the chain 148 thereby pulling the drive unit 200 upwards along the drill guide frame 142.

The drive unit 200 allows the drill motor 150 and the output 210 to be positioned on the same side of the drive unit 200 instead of attaching the drill motor 150 directly to the bottom end 145 of the drill rod 144. This will allow the overall height of the drilling portion 140 to be reduced and therefore the rock bolting apparatus 50 and/or allow a longer drill rod 144 to be used.

Using the drill motor 150 to rotate the input 220 will cause the drive unit 200 to transfer this rotational force to the output 210 and specifically the drill rod socket 212 on the output 210, which will in turn rotate the drill rod 144.

The bolting portion 160 of the rock bolting apparatus 50 is used to fasten a rock bolt 164 into the bolt hole that has been created by the drilling portion 140. The bolting portion 160 can have a bolting guide frame 162 that allows a bolting assembly 170 to move vertically along bolting guide frame 162. The bolting guide frame 162 can extend vertically and be movable vertically relative to the frame 135 of the drill bolt mast 130 so that a top end of the bolting guide frame 162 can be positioned against the top plate 136 of the drill bolt mast 130 or moved downwards to create a space between the top of the bolting guide frame 162 and bottom of the top plate 136 of the drill bolt mast 130.

A foot plate 166 can be provided on the bottom of the bolting guide frame 162 to protect the elements of the bolting portion 160 from being damaged if the bottom of the bolting portion 160 accidentally comes into contact with the floor of the underground space while the rock bolting apparatus 50 is being maneuvered into place.

The bolting assembly 170 is used to support a bolting motor 180, such as a hydraulic motor, as well as receive a head 165 of the rock bolt 164. The bolting assembly 170 can have guide brackets 172 for slidably attaching the bolting assembly 170 to the bolting guide frame 162 so that the bolting assembly 170 can move vertically along the bolting

guide frame 162. A socket output (not shown) for receiving the head 165 of the rock bolt 164 can be provided on the top of a bolting assembly 170 and the bolting motor 180 can be connected directly below the socket output to rotate the socket output.

Although a drive unit similar to drive unit 200 could be used with the bolting portion 160 this will not be necessary in many cases. Because the bolt holes created with the drilling portion 140 of the rock bolting apparatus 50 must be deeper than the length of the rock bolts that will be used, the drill rod 144 must be longer than the rock bolt 164. This causes the drilling portion 140 of the drill bolt apparatus 50 to be the limiting factor in the height that is necessary for the drill bolt apparatus 50 because the bolting portion 160 that installs the rock bolt 164 can be made shorter than the drilling portion 140. Because of this, positioning the bolting motor 180 below the socket output to directly drive the socket output will not usually reduce the overall length of the rock bolt 164 that can be used since the length of the drill rod 144 will already limit it.

A chain bracket can be provided attached to the bolting assembly 170. The chain bracket can be attached to a chain that is attached at another end to a bolting guide motor to move the bolting assembly 170 vertically along the bolting guide frame 162.

Referring again to FIG. 1, in operation the rock bolting machine 10 can be used to install a rock bolt 164 in a roof of an underground space. An operator of the rock bolting machine 10 can sit in the cab 16 and maneuver both the vehicle 20 and the rock bolting

apparatus 50 on the end 34 of the boom 30 so that the top plate 136 of the rock bolting apparatus 50 is positioned against a roof of an underground space where the rock bolt 164 will be installed. The operator can use the boom 30 to move the rock bolting apparatus 50 from side to side or telescope it out. The operator can also rotate the rock bolting apparatus 50 relative to the second end 34 of the boom 30 if the roof of the underground space is at an angle or the rock bolt 164 is being installed in a surface other than the roof.

Because the rock bolting apparatus 50 is positioned out in front of the vehicle 20, the vehicle 20 and the operator can be positioned beneath a portion of the roof that has already been bolted while the rock bolting apparatus 50 is extended out beneath a portion of the roof that is still being bolted.

When the operator has the rock bolting apparatus 50 in the proper location, he or she can raise the rock bolting apparatus 50 using the boom 30 until the top plate 136 comes into contact with the roof of the underground space. When the nub 138 extending through the top plate 136 is depressed by the roof of the underground space, it can come in contact with a switch that can stop the boom 30 from moving the rock bolting apparatus 50 any further upwards. If the boom 30 is powered by hydraulics, the switch can stop more hydraulic fluid from flowing thereby stopping the boom 30 from moving the rock bolting apparatus 50 any further upwards.

Once the rock bolting apparatus 50 is positioned against the roof of the underground space, the pick 112 in the pick mast 110 can be used to hold the rock bolting apparatus 50 against the roof while the rock bolting apparatus 50 is being used to drill a bolt hole and install a rock bolt 164 in the bolt hole. When the top of the rock bolting apparatus 50 is placed against a roof of an underground space, the pick 112 can be extended out of the top of the pick guide 114 and forced into the roof of the underground space. By engaging the roof in this manner, the extended pick 112 can hold the rock bolting apparatus 50 in place, preventing it from shifting its position on the roof while the bolt hole is being drilled and the rock bolt 164 is being installed in the drilled bolt hole.

Once the rock bolting apparatus 50 is secured in position using the pick 112, the drilling portion 140 on the drill bolt mast 130 can be used to drill a bolt hole. The drilling rod 144 can be rotated by using drill motor 150 to rotate the input 210 of the drive unit 200 which will in turn cause the output 220 of the drive unit 200 to be rotated along with the drill rod socket 212 and the drill rod 144 held in the drill rod socket 212. When the drill rod 144 is rotating, the drill rod 144 can be forced upwards by first moving the drill guide frame 142 upwards on the drill rod mast 130 towards the top plate 136. When the drill guide frame 142 has moved upwards enough that the top of the drill guide frame 142 is adjacent to the top plate 136 of the drill rod mast 130, the drill rod 144 should have bored some distance into the roof. The drill rod 144 can continue to be moved upwards, while it is being rotated, by moving the drive unit 200 upwards along the drill guide frame 142

using the drill guide motor 149 to wind up the chain 148, pulling the drive unit 200 upwards along the drill guide frame 142. As the drill rod 144 is rotated and moved upwards, it will bore out the bolt hole in the roof of the underground space.

When the bolt hole has been drilled, the drill guide motor 149 can be reversed to allow the drive unit 200 to move downwards causing the drill rod 144 to be retracted from the bolt hole it has drilled.

With the drill rod 144 retracted out of the bolt hole, the bolting portion 160 can be used to install a rock bolt 164 in the bolt hole. The drill bolt mast 130 can be pivoted around pivot point 132 using actuator 134 while the pick 112 keeps the rock bolting apparatus 50 in the same position relative to the roof. The drill rod 144 and the rock bolt 164 can be positioned the same radius from the pivot point 132 so that when the drill bolt mast 130 is pivoted around the pivot point 132, the top of the drill rod 144 and the rock bolt 164 will follow the same path. When the drill bolt mast 130 has pivoted so that the rock bolt 164 is positioned under the bolt hole, the pivoting of the drill bolt mast 130 can be stopped and the bolting portion 160 of the rock bolting apparatus 50 can be used to install the rock bolt 164 in the bolt hole.

With the rock bolt 164 positioned under the bolt hole, the bolting guide frame 162 can be moved upwards until the top of the bolting guide frame 162 is positioned adjacent to the top plate 136 of the drill bolt mast 130. This will have caused the top of the rock bolt 164

to be driven upwards into the bolt hole that has been drilled. The bolting guide motor can then be used to move the bolting assembly 170 upwards along the bolting guide frame 162 to move the rock bolt 164 even further into the bolt hole. Unlike the drill rod 144 that is rotated while it is moved upwards to drill the bolt hole, the rock bolt 164 can be first just forced upwards into the bolt hole without rotating it. Once the rock bolt 164 is inserted into the bolt hole, the rock bolt 164 can be rotated using the bolting motor 180 to torque the rock bolt 164 securely into the bolt hole.

Unlike the drill rod 144 that is retracted from the bolt hole, the rock bolt 164 will stay secured in the bolt hole, so the drilling assembly 170 simply has to be allowed to move downwards relative to the drill guide frame 162 and the drill guide frame 162 allowed to moved downwards away from the top plate 136 while the rock bolt 164 remains secured in the roof of the underground space.

To drill another bolt hole and install another rock bolt, another rock bolt 164 can be placed in the bolting portion 160 and the process repeated by drilling a new bolt hole and installing the new rock bolt 164 in this new bolt hole.

The foregoing is considered as illustrative only of the principles of the invention. Further, since numerous changes and modifications will readily occur to those skilled in the art, it is not desired to limit the invention to the exact construction and operation shown and described, and accordingly, all such suitable changes or modifications in

structure or operation which may be resorted to are intended to fall within the scope of the claimed invention.

1. A rock bolting machine for drilling a bolt hole in a roof of an underground space and installing a rock bolt in the bolt hole, the rock bolting machine comprising:

a vehicle;

a boom having a first end attached to the vehicle and a second end extending in front of the vehicle; and

a rock bolting assembly attached to the second end of the boom, the rock bolting assembly having a drill bolt mast comprising:

a frame;

a drilling portion adapted to drill the bolt hole; and

a bolting portion adapted to secure the rock bolt in the bolt hole

wherein the drilling portion has a drill rod, a drill motor and a drive unit, the drive unit operatively connecting the drill rod and the drill motor and operative to transfer rotational motion of the drill motor to the drill rod,

and wherein the drive unit comprises an input on a top of the drive unit and an output on the top of the drive unit, the input of the drive unit operatively connected to the drill motor and the output of the drive unit operatively connected to a bottom end of the drill rod.

2. The rock bolting machine of claim 1 wherein the drill rod and drive unit are moveable vertically relative to the frame of the drill bolt mast.

3. The rock bolting machine of claim 2 wherein the drilling portion has a drill guide frame vertically movable relative to the frame of the drill bolt mast.

4. The rock bolting machine of claim 3 wherein the drive unit is movably connected to the drill guide frame so that the drive unit and the drill rod are moveable vertically relative to the drill guide frame.

5. The rock bolting machine of claim 1 wherein the drive unit comprise an input gear operably connected to the input and an output gear operatively connected to the output.

6. The rock bolting machine of claim 5 further comprising a chain connecting the input gear and the output gear.

7. The rock bolting machine of claim 5 wherein the output gear is supported by a tapered bearing.

8. The rock bolting machine of claim 1 wherein the bolting portion is moveable vertically relative to the frame of the drill bolt mast.

9. The rock bolting machine of claim 8 wherein the bolting portion comprises a bolting assembly moveably vertically relative to the frame of the drill bolt mast.

10. The rock bolting machine of claim 9 wherein the bolting portion comprises a bolting guide frame vertically moveable relative to the frame of the drill bolt mast and the bolting assembly is moveable vertically relative to the bolting guide frame.

11. The rock bolting machine of claim 1 further comprising a pick extendable out a top of the rock bolting assembly, the pick adapted to engage the roof of the underground space to hold the rock bolting assembly in place.

12. The rock bolting machine of claim 11 wherein the pick forms a pivot point around which the rock bolting assembly is pivoted when the pick engages with the roof of the underground space.

13. The rock bolting machine of claim 12 wherein the pick is spaced relative to the drill rod in the drilling portion and the rock bolt in the bolting portion so that when the rock

bolting assembly is pivoted around the pick, the rock bolt aligns with the bolt hole formed by the drill rod in the drilling portion.

14. The rock bolting machine of claim 1 further comprising a switch provided on a top of the rock bolting assembly wherein when the switch engages with the roof of the underground space, upward motion of the rock bolting assembly by the boom is stopped.

15. The rock bolting machine of claim 1 further comprising a foot plate provided on a bottom of the rock bolting assembly.

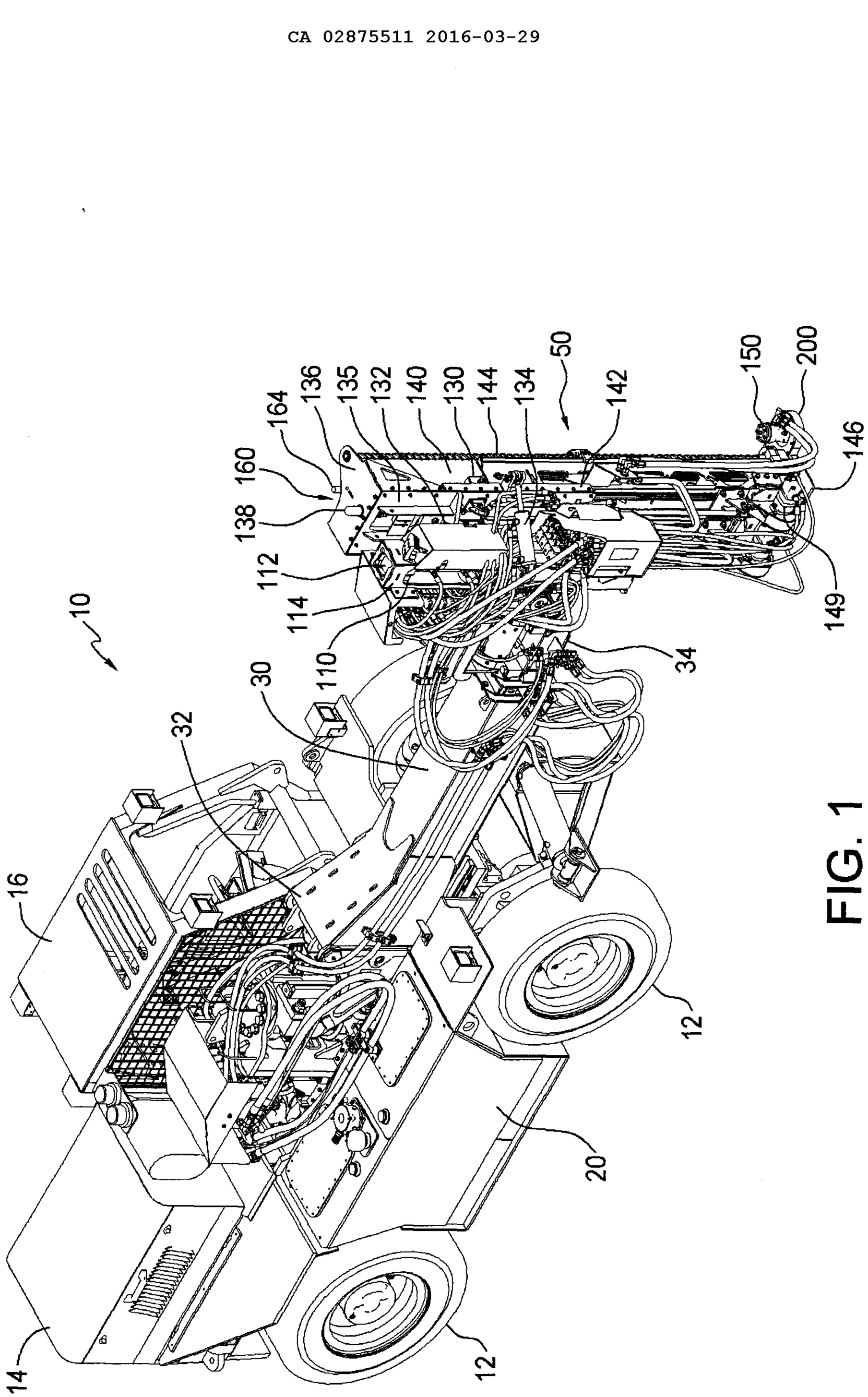
10
12
14
16
20
30
32
34
110
112
114
138
146
149
150
160
164
200
132
134
135
136
140
142
144
50

FIG. 1

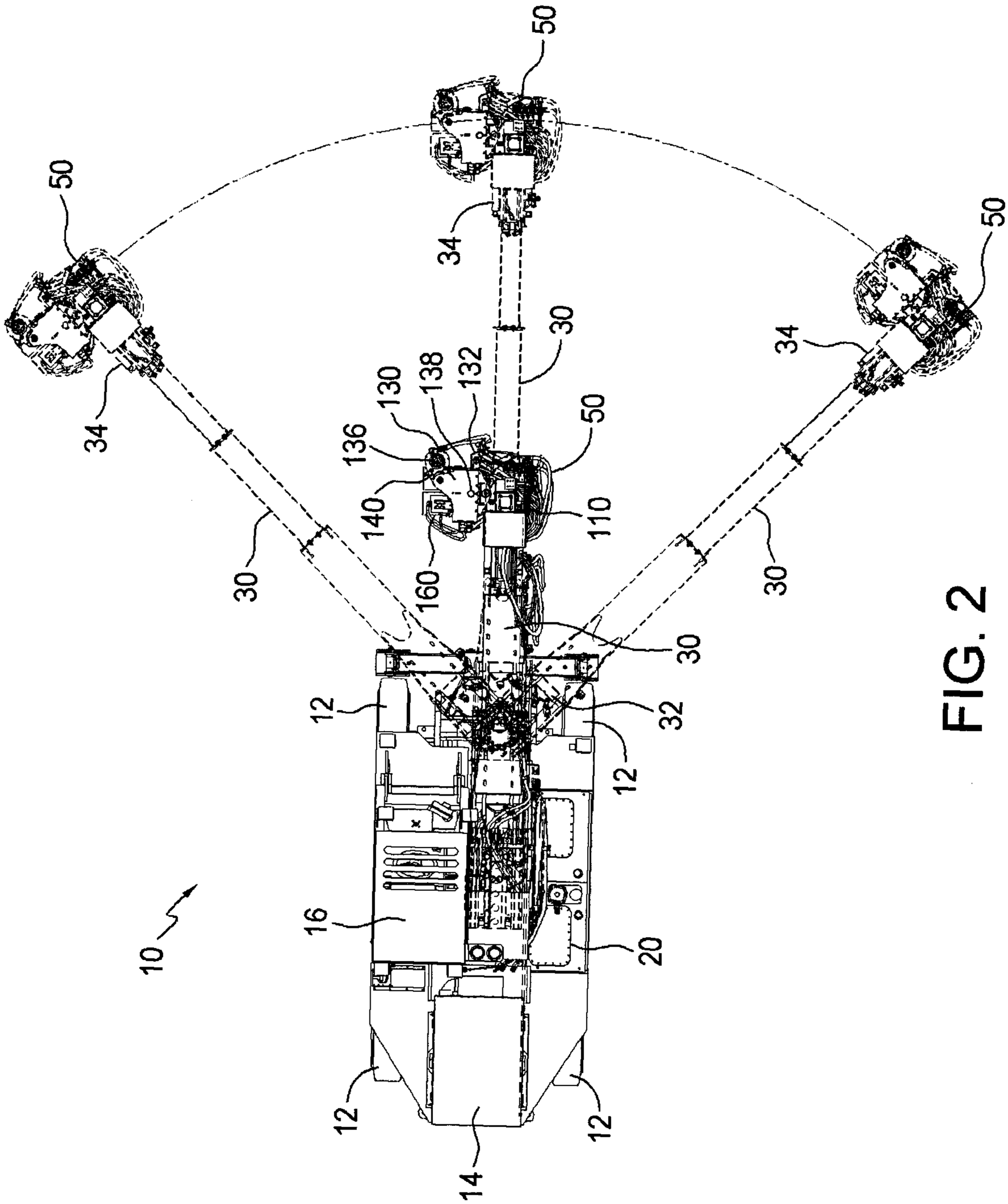

FIG. 2

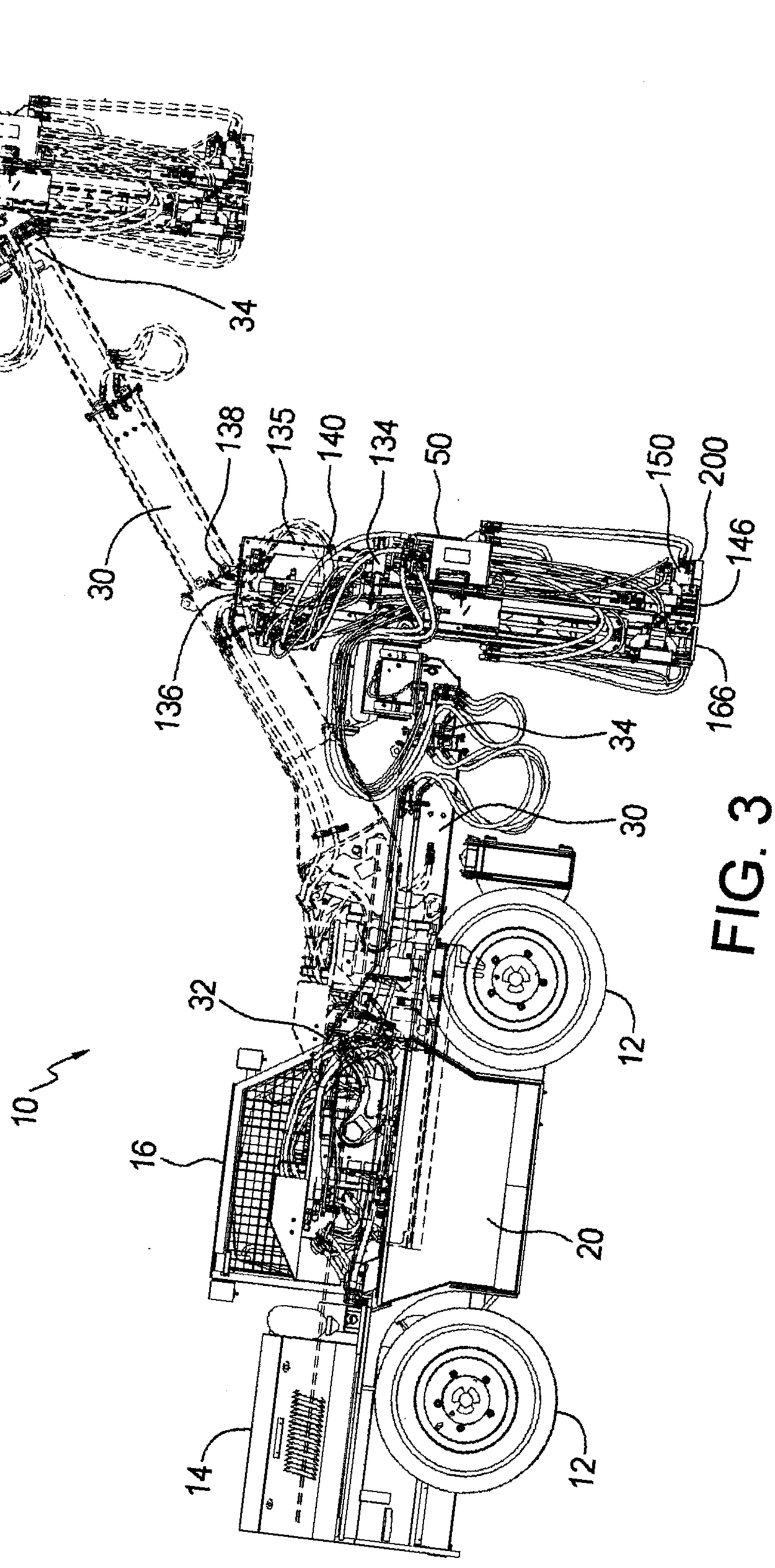
136
50
34
30
138
135
140
134
50
150
200
146
136
166
34
30
32
12
10
16
20
14
12

FIG. 3

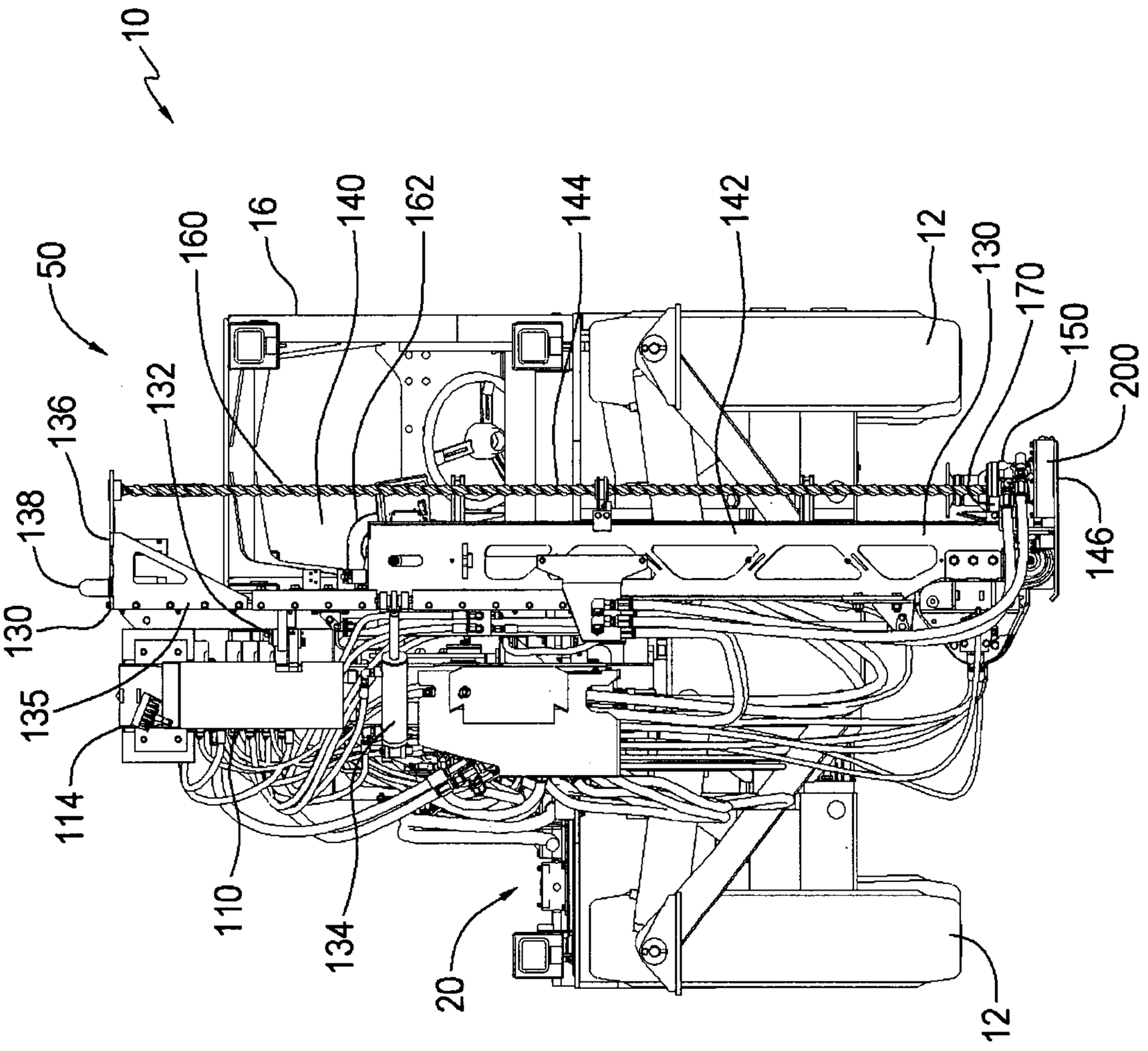
10
50
160
16
140
162
144
142
12
130
170
150
200
146
132
136
138
130
135
114
110
134
20
12

FIG. 4

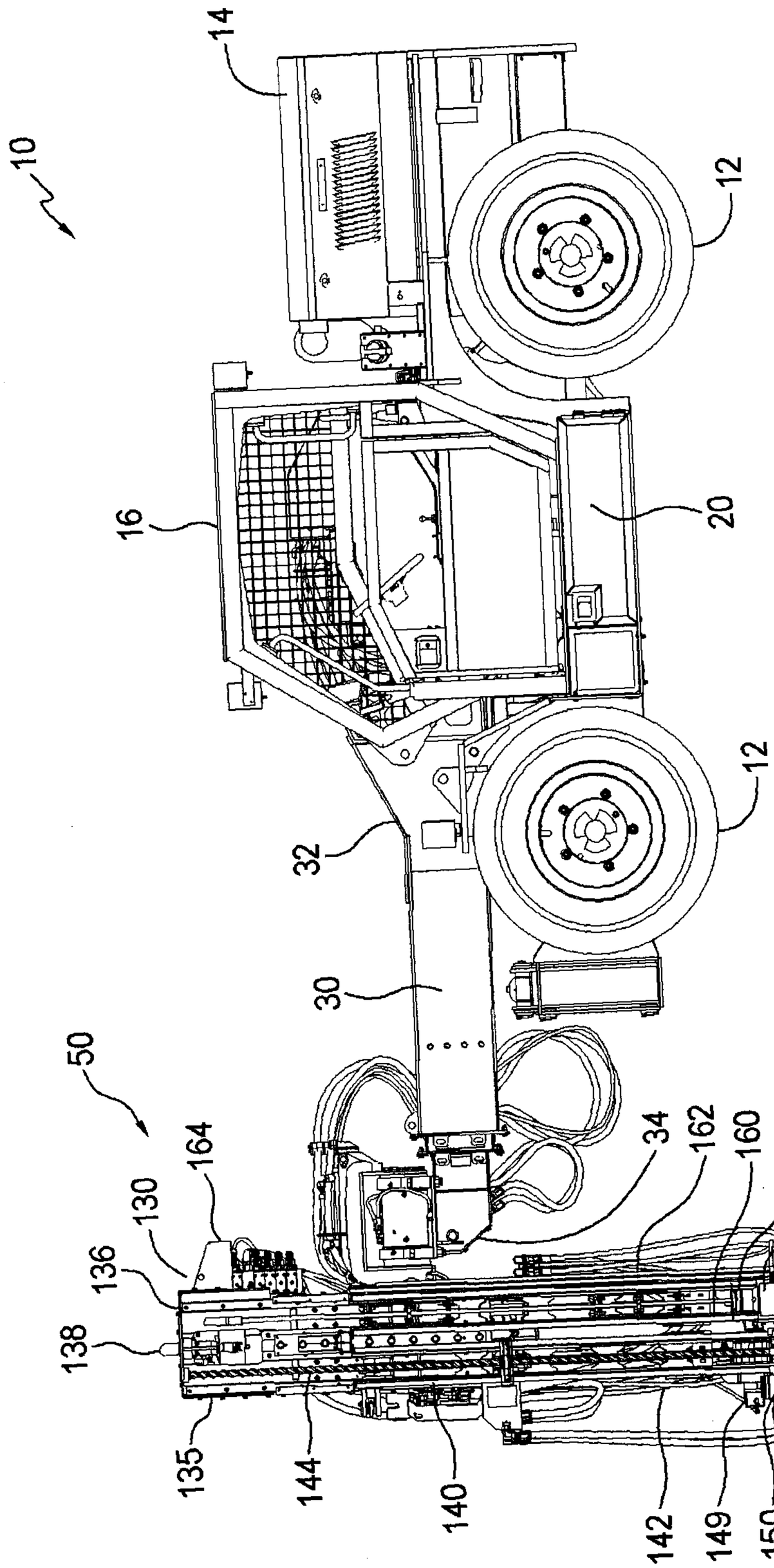
10
14
12
16
20
32
12
30
50
164
130
136
138
135
144
140
34
162
160
165
170
180
166
46
142
149
150
200
146

FIG. 5

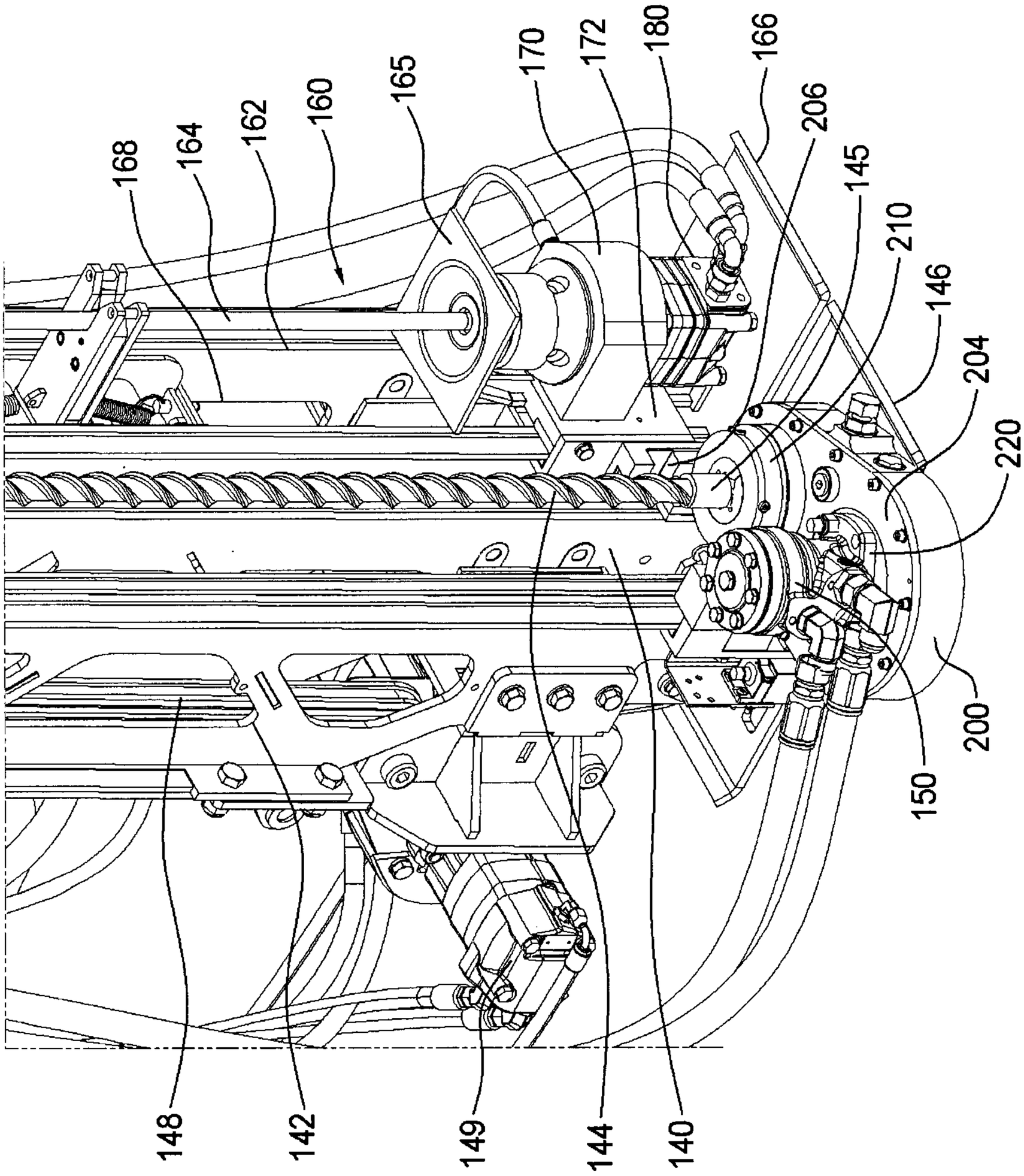
168
164
162
160
165
170
172
180
166
206
145
210
146
204
220
200
150
148
142
149
144
140

FIG. 6

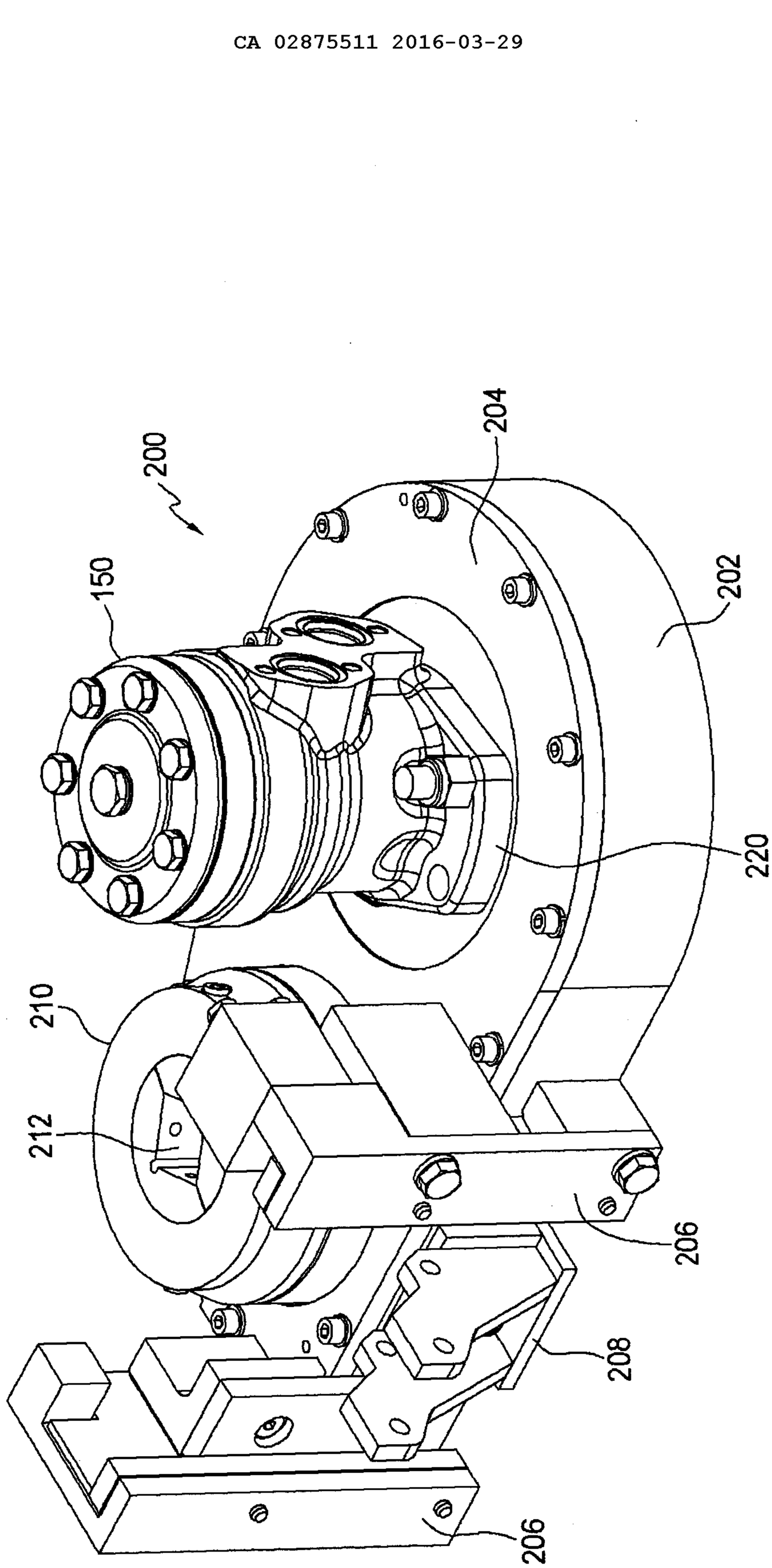

FIG. 7

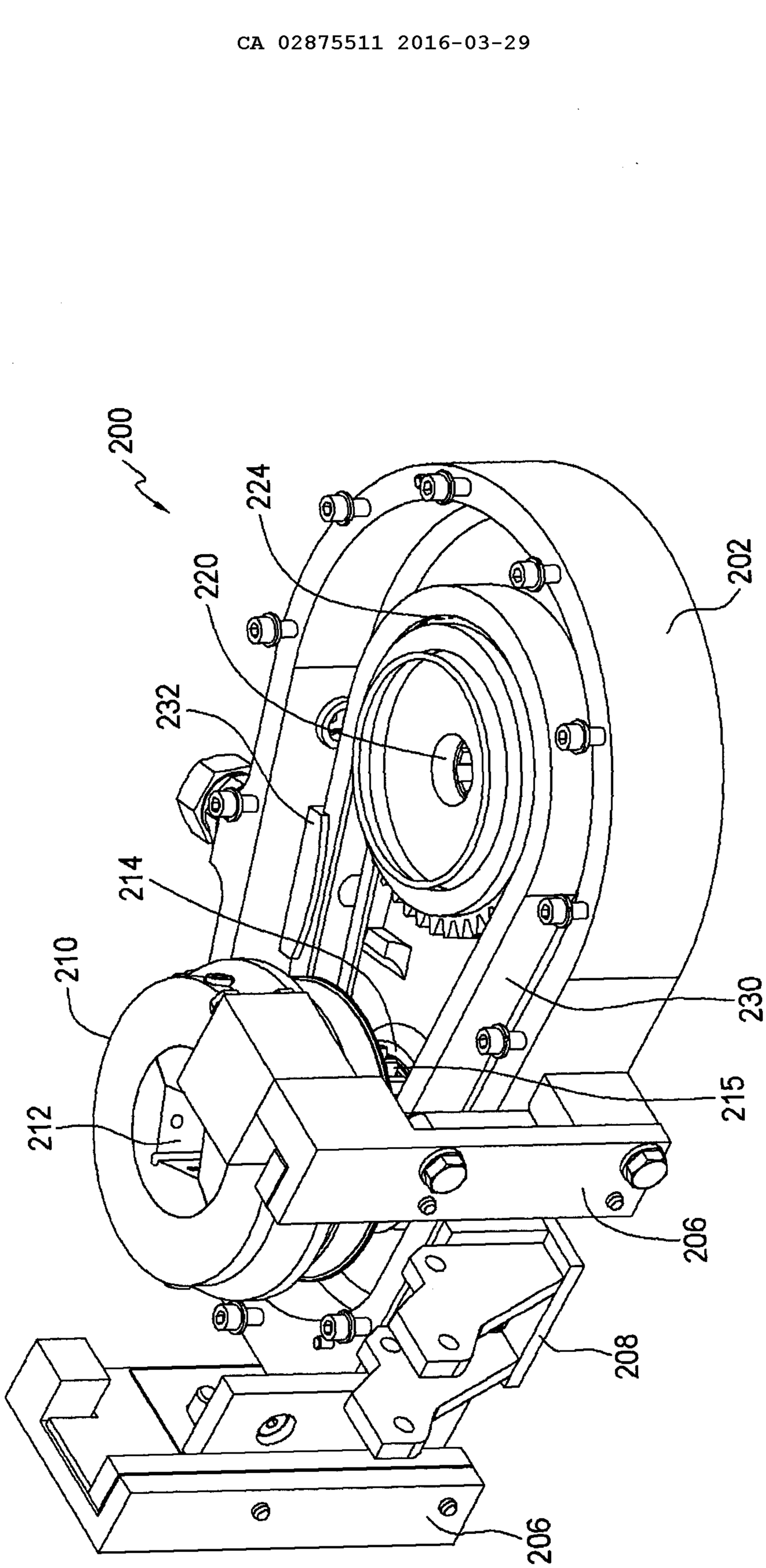

FIG. 8

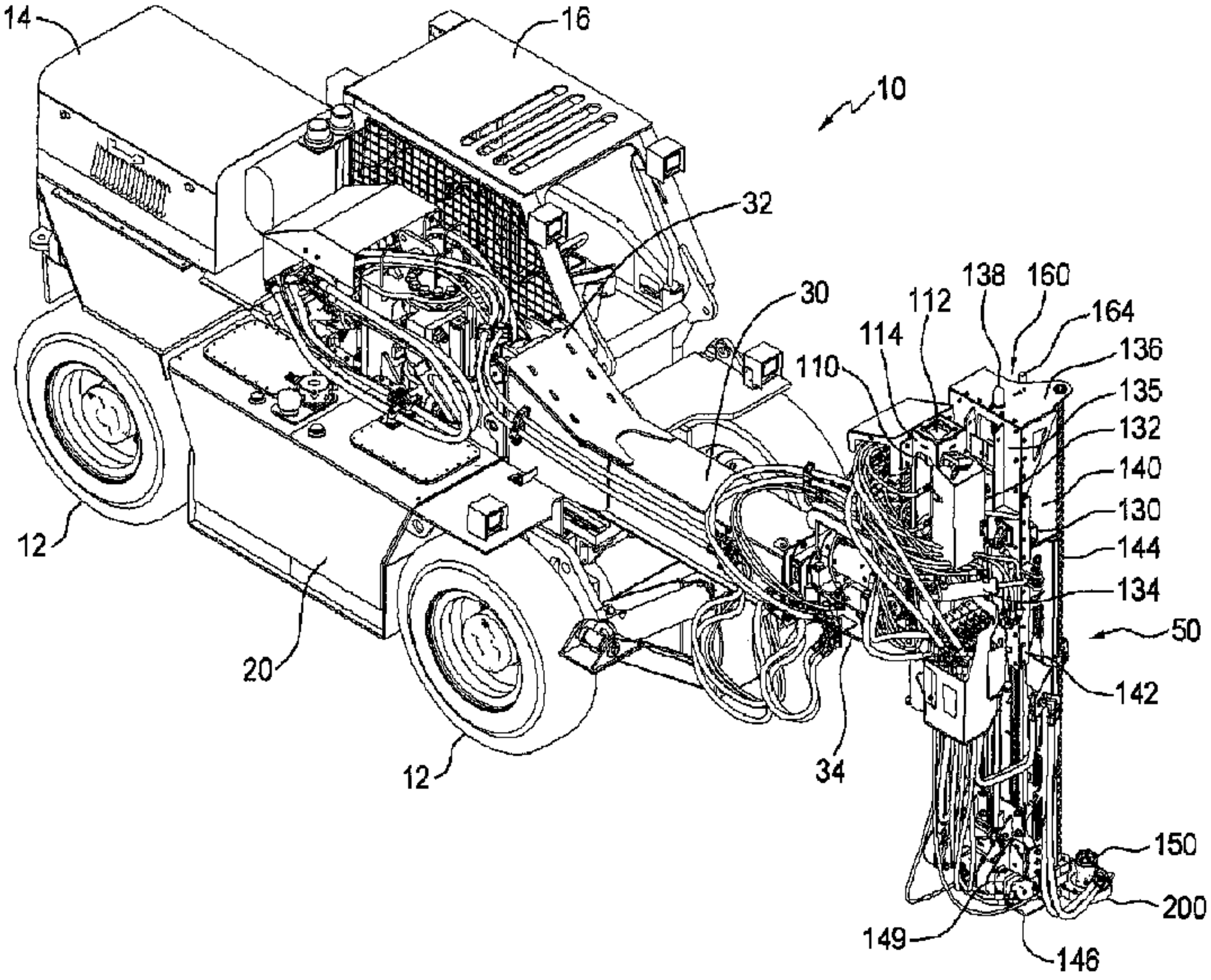
14
16
10
32
30
138
160
112
164
114
136
110
135
132
140
130
144
134
50
142
12
20
12
34
150
200
149
146