(No Model.)

J. McDONALD.

LOCOMOTIVE SAND BOX.

No. 456,054. Patented July 14, 1891.

Fig. 1.

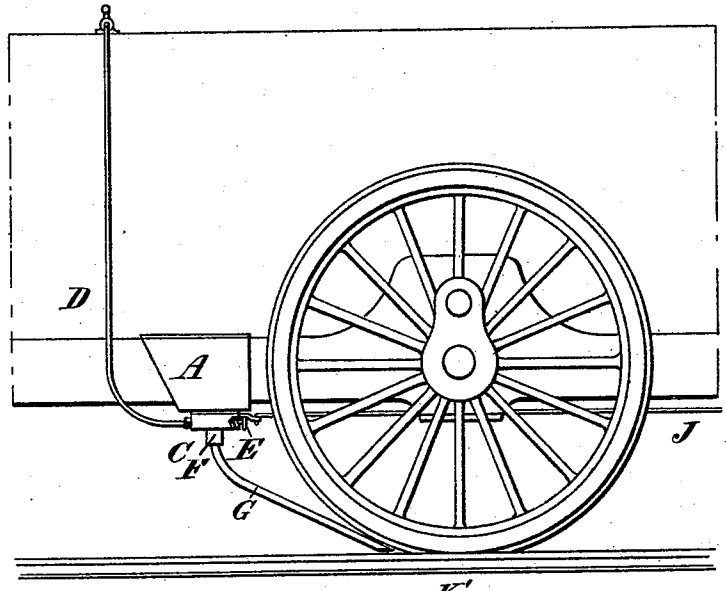

Fig. 2.

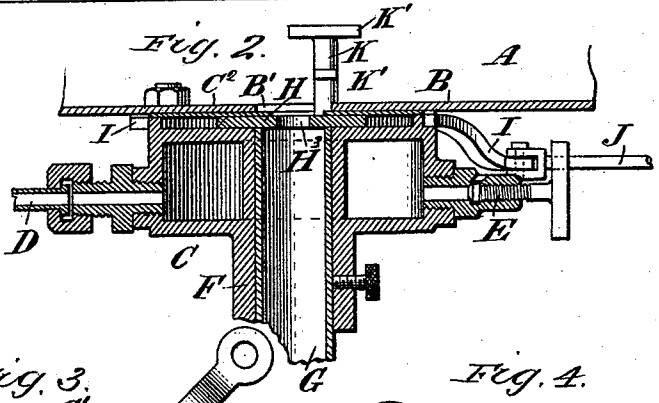

Fig. 3.

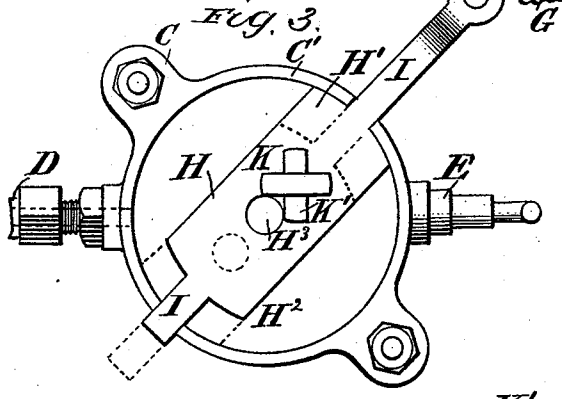

Fig. 4.

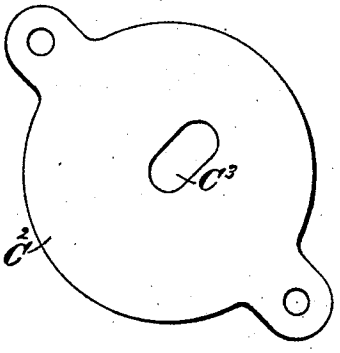

Fig. 5.

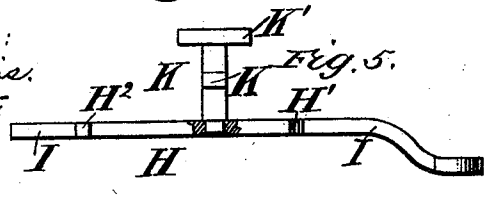

WITNESSES:
W. R. Davis.
A. Lurcott.

INVENTOR:
John McDonald.
BY Munn & Co
ATTORNEYS

THE NORRIS PETERS CO., PHOTO-LITHO., WASHINGTON, D. C.

UNITED STATES PATENT OFFICE.

JOHN McDONALD, OF TOKIO, JAPAN.

LOCOMOTIVE SAND-BOX.

SPECIFICATION forming part of Letters Patent No. 456,054, dated July 14, 1891.

Application filed August 28, 1890. Serial No. 363,391. (No model.)

To all whom it may concern:

Be it known that I, JOHN MCDONALD, a subject of the Queen of Great Britain, at present residing at Tokio, Japan, have invented a new and Improved Locomotive Sand-Box, of which the following is a full, clear, and exact description.

The object of the invention is to provide a new and improved locomotive sand-box, which is simple and durable in construction, and is arranged to dry the sand perfectly to prevent its caking and to insure a continuous flow of the sand to the rails, at the same time permitting of placing the sand-receptacle below or at the sides of the boiler instead of perching the same on top of the boiler, as is now done.

The invention consists of a steam-chest connected with a steam-supply, and through which is adapted to pass the sand, so that the latter is heated and dried during its passage through the steam-chest and before its delivery to the rails.

The invention also consists of certain parts and details and combinations of the same, as will be fully described hereinafter, and then pointed out in the claims.

Reference is to be had to the accompanying drawings, forming a part of this specification, in which similar letters of reference indicate corresponding parts in all the figures.

Figure 1 is a side elevation of the improvement as applied. Fig. 2 is an enlarged sectional side elevation of the same. Fig. 3 is a plan view of the steam-chest and its valve. Fig. 4 is a plan view of the cover for the steam-chest, and Fig. 5 is a side elevation with part in section of the agitator.

The improved sand-box is provided with a sand-receptacle A, of suitable shape and dimensions, and having in its bottom B an opening B′, through which the sand is to pass. On the under side of the bottom B is secured a steam-chest C, preferably made in the form of a hollow disk, into which leads a pipe D, connected with the steam-compartment of the boiler of the locomotive, so that the steam-chest is filled with steam. The steam-chest is also provided with a drip-cock E of any approved construction, for carrying off the water of condensation from the steam-chest C. In the middle of the steam-chest C is formed a pipe F, which extends from the top to the bottom, and is connected at its lower end with the upper end of the sand-pipe G, leading to the top of the rail, in front of the driving-wheels, as is plainly shown in Fig. 1. The top opening of the pipe F is adapted to be opened and closed by a valve H, secured on a longitudinally-extending stem I somewhat narrower than the valve H, so that the latter forms shoulders H′ and H^2 adapted to butt alternately on the inside of the rim C′, arranged on top of the steam-chest C. The shoulders H′ and H^2 butt alternately on the inside of the rim C′ of the steam-chest C, so as to limit the sliding movement of the valve H. The valve H is protected by a cover or plate C^2, having an elongated opening C^3, and serving to prevent jamming, as shown in the drawings.

One end of the valve-stem I is connected with the rod J, extending to the cab of the locomotive and connected there with suitable mechanism within convenient reach of the operator, so as to enable the latter to shift the valve H forward and backward to open and close the pipe F. The valve H is provided at or near the center with an opening H^3, and is adapted to establish communication between the opening B′ and the upper end of the pipe F.

On top of the valve H is secured an agitator K, provided with a number of agitating-rods K′, which, with the agitator K, extend through the opening B′ into the sand-receptacle A.

The operation is as follows: The valve H in its ordinary position (shown in dotted lines in Fig. 3) has its aperture H^3 disconnected from the upper end of pipes F and G, so that the sand in box A cannot pass to the said pipes. Now when the operator desires to sand a rail he actuates the mechanism in the cap to slide the valve-stem I rearward, whereby the opening H^3 in valve H registers with the pipe G, so as to establish communication between the receptacle A and the pipes F and G. At the same time the agitator K and its arms K′ agitate the sand, so that the latter readily flows by its own gravity from the receptacle A to the pipes F and G. The sand in its downward movement also passes through the elongated aperture C^3 in the cover-plate C^2. The sand in passing through the pipe F into the pipe G is thoroughly

heated by the heat emanating from the steam in the steam-chest C, so that all caking of the sand is prevented and the sand flows readily through the pipe G to the rail to be sanded. As soon as this has been accomplished the operator shifts the valve H, so as to close the pipe F to prevent further flow of the sand from the receptacle A to the pipe F. It will further be seen that the heated steam-chest C heats the bottom B of the receptacle A, so that the sand in the latter is kept perfectly dry, and is not liable to cake therein. As the agitator K passes through the sand in the receptacle A, any possible cakes which may have formed are crushed, so that all caking is prevented, both in the receptacle and at the time that it flows through the pipe G.

The sand-pipe is made adjustable in length to suit thick and thin tires on locomotives, and it is secured with a bayonet-joint fastening, as shown in the drawings.

Having thus fully described my invention, I claim as new and desire to secure by Letters Patent—

1. In a locomotive sand-box, the combination, with a steam-chest arranged on the under side of the sand-receptacle and connected with a steam-supply, of a pipe passing through the said steam-chest and adapted to connect at its lower end with the sand-pipe leading to the rails, a valve fitted to slide on the top of the said steam-chest over the said pipe and adapted to establish communication between the sand-box and the said pipe, and an agitator secured on the said valve and extending into the sand-receptacle, substantially as shown and described.

2. In a locomotive sand-box, the combination, with a steam-chest arranged on the under side of the sand-receptacle and connected with a steam-supply, of a pipe passing through the said steam-chest and adapted to connect at its lower end with the sand-pipe leading to the rails, a valve fitted to slide on the top of the said steam-chest over the said pipe and adapted to establish communication between the sand-box and the said pipe, an agitator secured on the said valve and extending into the said receptacle, and means, substantially as described, for shifting the said valve, as and for the purpose set forth.

JOHN McDONALD.

Witnesses:
W. R. GARDINER, Jr.,
W. N. WHITNEY.