E. M. KELLOGG.

REPEATING MECHANISM FOR PHONOGRAPHS.

APPLICATION FILED JUNE 16, 1919. RENEWED JULY 30, 1920.

1,407,547. Patented Feb. 21, 1922.

3 SHEETS—SHEET 1.

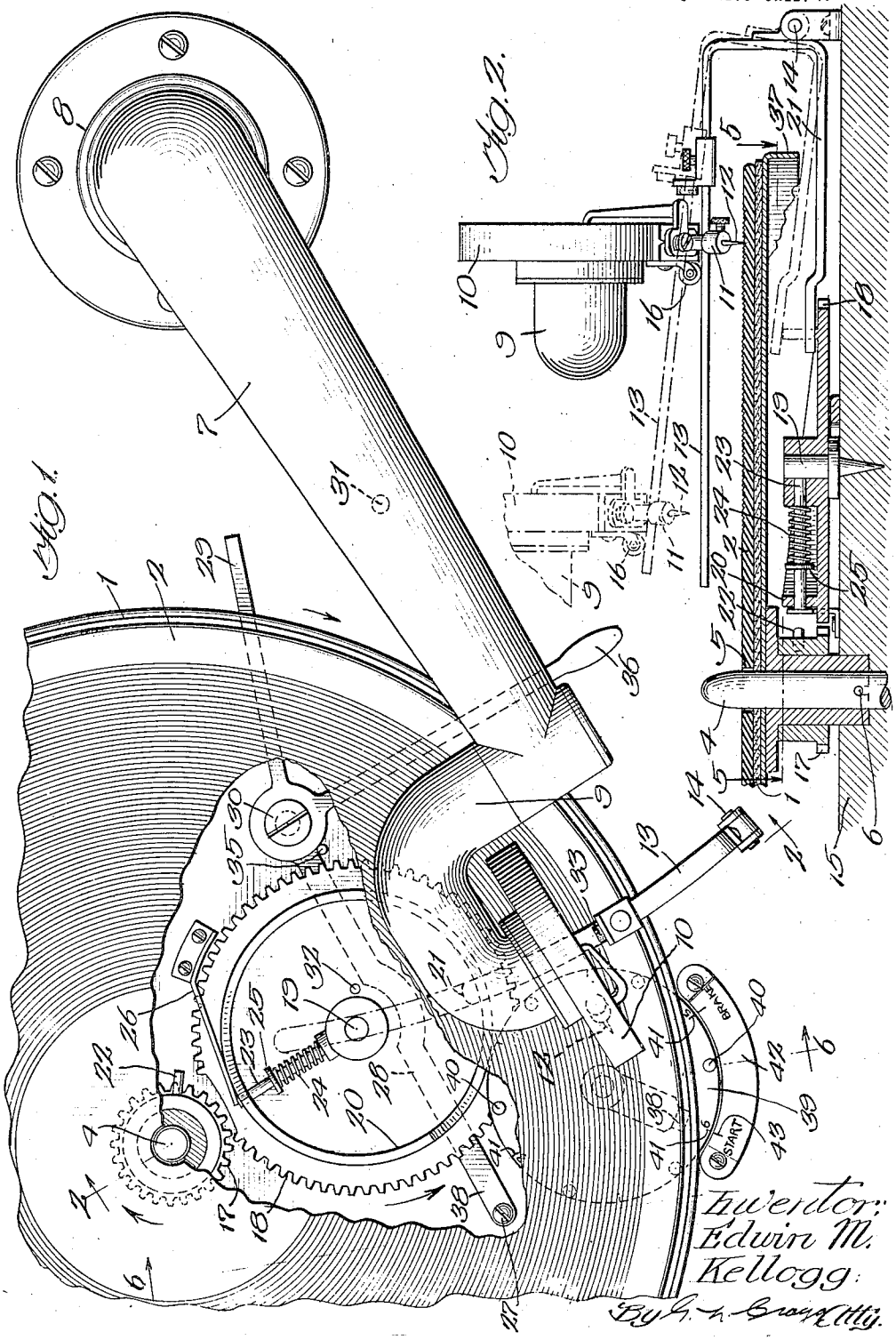

Inventor:
Edwin M. Kellogg.
By G. A. Brown & Mfg.

E. M. KELLOGG.

REPEATING MECHANISM FOR PHONOGRAPHS.

APPLICATION FILED JUNE 16, 1919. RENEWED JULY 30, 1920.

1,407,547. Patented Feb. 21, 1922.

3 SHEETS—SHEET 2.

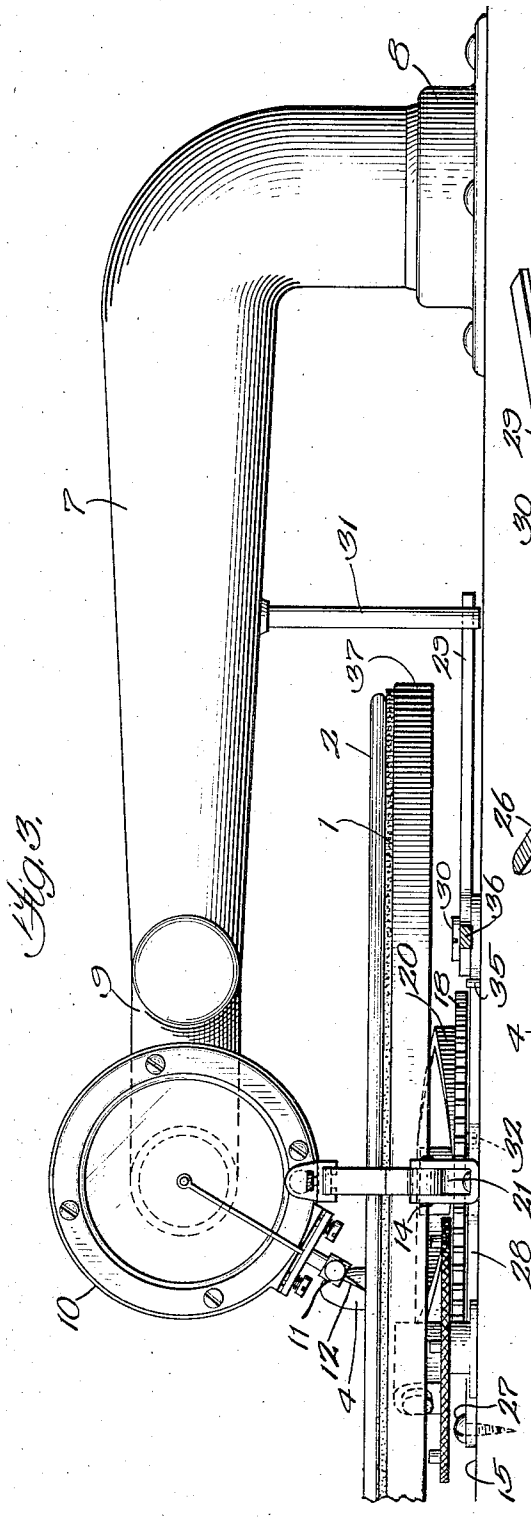

Fig. 3.

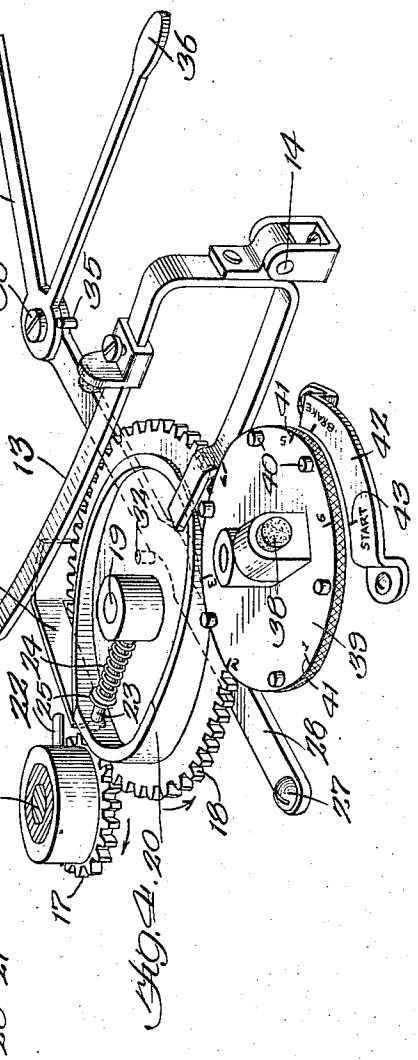

Fig. 4.

Inventor:
Edwin M. Kellogg
By G. L. Bragg
Atty.

E. M. KELLOGG.

REPEATING MECHANISM FOR PHONOGRAPHS.

APPLICATION FILED JUNE 16, 1919. RENEWED JULY 30, 1920.

1,407,547. Patented Feb. 21, 1922.

3 SHEETS—SHEET 3.

Fig. 5.

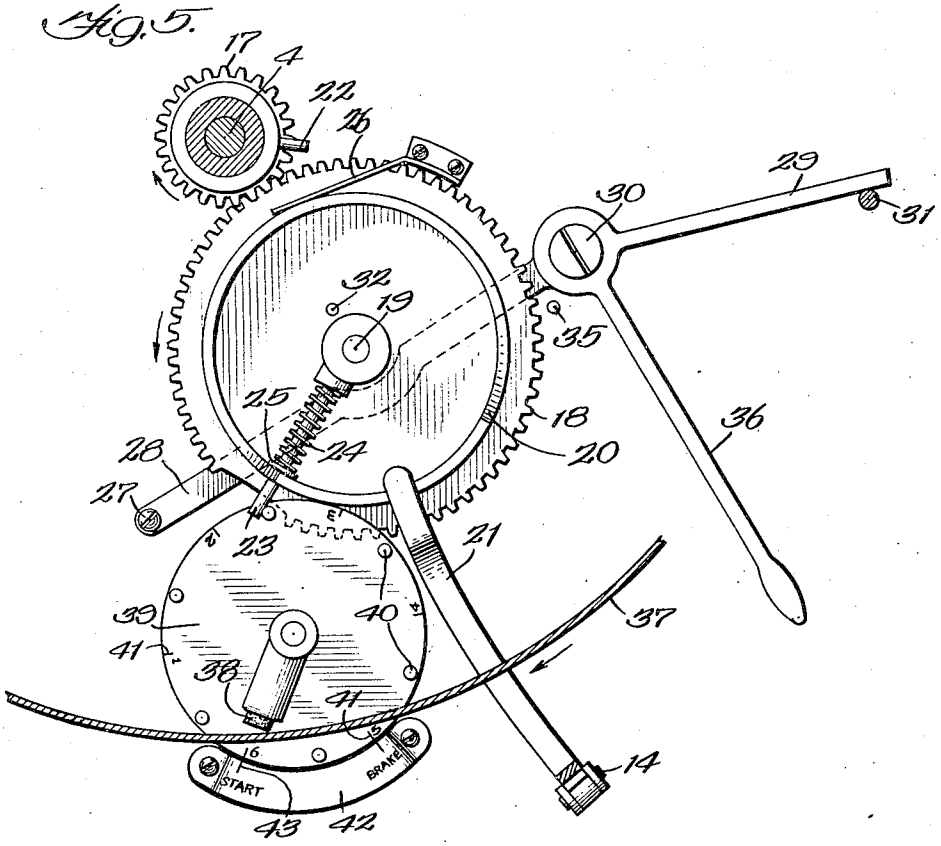

Fig. 6.

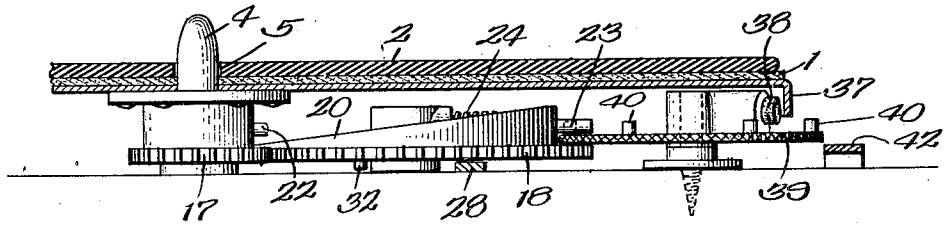

Inventor:
Edwin M. Kellogg
By [illegible]
Atty.

UNITED STATES PATENT OFFICE.

EDWIN M. KELLOGG, OF MOLINE, ILLINOIS.

REPEATING MECHANISM FOR PHONOGRAPHS.

1,407,547. Specification of Letters Patent. Patented Feb. 21, 1922.

Application filed June 16, 1919, Serial No. 304,438. Renewed July 30, 1920. Serial No. 400,212.

To all whom it may concern:

Be it known that I, EDWIN M. KELLOGG, citizen of the United States, residing at Moline, in the county of Rock Island and State of Illinois, have invented a certain new and useful Improvement in Repeating Mechanism for Phonographs, of which the following is a full, clear, concise, and exact description.

My invention relates to phonographs and has for its object the provision of improved mechanism whereby the phonographs may automatically repeat the playing of records.

In accordance with one feature of the invention the mechanism that is adapted to effect the return of the tone arm structure to normal position is so located with reference to the record supporting turn table as not to require displacement in order to permit the removal and replacement of records.

The invention has for another object the provision of improved mechanism operated by the turn table actuating mechanism and controlled by the tone arm structure to effect movement of the latter to record starting position upon the completion of each performance and while this second object of my invention is desirably accomplished by mechanism which permits the removal and replacement of records without requiring readjustment of the parts, yet this feature of the invention is not to be so limited.

The invention has for its further object the provision of improved means whereby the number of times a performance is to be repeated is limited, this means being desirably so constructed that the number of times the performance is to be repeated may be regulated.

I will explain my invention more fully by reference to the accompanying drawings showing the preferred embodiment thereof and in which Fig. 1 is a plan view of a part of a phonograph with parts removed to reveal details of construction and other parts broken away which are not essential to an understanding of the invention; Fig. 2 is a sectional view on line 2—2 of Fig. 1; Fig 3 is a side view of the structure shown in Fig. 1; Fig. 4 is a perspective view of novel features of the invention; Fig. 5 is a view on line 5—5 of Fig. 2 and Fig 6 is a view on line 6—6 of Fig. 1.

Like parts are indicated by similar characters of reference throughout the different figures.

The phonograph shown employs a turn table 1 for supporting a disc record, a record 2 being indicated. The turn table has a hub portion 3 secured thereto. A spindle 4, rotated by a spring or other suitable form of motor, passes through the hub of the turn table and a distance beyond the turn table, each record having a central aperture 5 in which the upper end of the spindle may be received. The spindle is brought into driving connection with the hub by any suitable means such as the pin and slot structure 6, Fig. 2. The parts of the phonograph thus far specifically described in connection with the accompanying drawings are well known to those skilled in the art as is also the form of tone arm structure illustrated and which is inclusive of the arm 7 mounted to swing at its outer end upon the mounting 8, the inner end of the arm having a section 9 swingingly supported upon the balance of the arm and carrying or terminating in a sound box 10 that has a stylus carrier 11 for holding a stylus 12 receivable in the spiral record groove upon the record disc.

The type of phonograph illustrated is well known to those skilled in the art but the invention is not to be limited in its application thereto.

In practicing my invention I employ a track 13 which extends across a portion of the turn table 1 toward the central portion thereof, the track being interposed between the turn table and the tone arm structure that overlies the turn table. The track is hinged at its outer end upon the support 14 mounted upon the top portion 15 of the phonograph cabinet and is normally positioned to be out of effective engagement with the tone arm structure. The track may be lifted at its inner end to be inclined outwardly, as indicated by a dot and dash line in Fig. 2, to lift and be engaged by the tone arm structure on the outward movement of the latter, said tone arm structure being desirably provided with a bearing roller 16 engageable with the track and allowing the tone arm structure to roll downwardly on the track with minimum friction. The track is desirably positioned as indicated in Fig. 1, occupying an arc of the circle traversed by the roller 16, in the bodily movement of the latter. I preferably employ a spur pinion 17 below the turn table and rigidly secured upon the hub of the turn table in order that the spindle may at

all times be free for the reception and the removal of records which may readily be inserted within the space intervening between the track 13 and the turn table and removed from such space. A spur gear wheel 18, also below the turn table, is mounted to turn upon an upright stub shaft 19 which may be secured to the cabinet portion 15 by means of the pointed end of the shaft 19 driven into said cabinet portion. Some of the teeth of the gear wheel are omitted as indicated in Fig. 1 to permit the gear wheel and pinion to be normally disengaged. A cam 20, of any shape suitable to its function and also preferably located below the turn table, is arranged to be operated by the gear wheel 18. This cam is preferably circular and concentric with the gear wheel 18 with which it may be integrally formed. The track 13 has a continuation 21 engageable with the cam. The continuation 21 of the track normally rests upon the lowest portion of the cam whereby the track is normally maintained in its lowermost position out of effective engagement with the tone arm structure. A pin 22 projects laterally from and turns with the spindle, this pin being preferably directly secured to the hub of the spur pinion 17. Another pin 23 is movable radially of the gear wheel 18, to be engaged with and separated from the pin 22, being slidably mounted at its inner end within the hub of said gear wheel and at its outer end within the high part of the cam 21, the pin 23 thus turning with the gear wheel 18. A spring 24 surrounds the pin 23 and has its inner end in engagement with the hub of the gear wheel 18, the outer end of said spring engaging the abutment 25 fixed upon said pin. Said spring thus serves to press the pin 23 outwardly. A pin depressor 26 is mounted upon the cabinet portion 15 and normally engages the outer end of the pin 23 to press this pin inwardly normally to preserve it out of engagement with the pin 22.

I employ mechanism, operated by the tone arm structure when reaching its inner record finishing position, for breaking the normal engagement between the pin depressor 26 and the pin 23. The mechanism illustrated for this purpose is inclusive of an arm pivoted at 27 upon the cabinet portion 15 and preferably made up of normally relatively fixed sections 28 and 29 which are frictionally coupled at 30. Said arm is adapted to be brought into turning engagement with the gear wheel 18 when the tone arm structure reaches its inner record finishing position. To this end the tone arm is provided with a depending pin 31 engageable with the arm section 29 to move the arm 28—29 against the pin 32 upon the gear wheel 18. As a result of the engagement of the arm 28—29 with the pin 32, the gear wheel 18 is turned in a counter-clockwise direction sufficiently to carry the pin 23 out of engagement with the pin depressor 26 whereupon the spring 24 projects the pin 23 into the circle of travel of the pin 22. As the pinion 17 turns the pin 22 thereon will engage the pin 23 and continue the rotation of the gear wheel 18 to bring the teeth thereon into engagement with the teeth of the pinion 17. The gear wheel 18 will thereupon be turned one complete revolution to bring the gear wheel 18 to the normal position illustrated in Fig. 1, the teeth of the pinion 17 escaping the gear wheel 18 just as this gear wheel is placed in the normal position shown. The cam 20 accompanies the gear wheel 18 in its rotation and causes the track structure to proceed through its cycle of movements. As the cam rotates in a counter-clockwise direction the extension 21 of the track 13 is gradually raised to bring the track into engagement with the roller 16 upon the tone arm structure which has now reached its inner record finishing position. While the track continuation 21 rests upon the high part of the cam the track 13 will remain in its outwardly inclined position sufficiently long to allow the tone arm structure to be brought to its outer position. When the tone arm is in its outer position the high part of the cam will leave the track continuation 21 which thereupon descends upon the cam to the inclined position illustrated in Fig. 2, whereby the track 13 is gradually lowered to bring the stylus 12 into engagement with the record at the initial end of the latter.

The track structure desirably carries a cushion-abutment 33 engaged by the sound box to limit the outward movement of the tone arm structure. This abutment is adjustable along the track to suit the record which is being played. The time at which the pin 31 is to engage the arm section 29 may be adjusted with reference to the length of the record by turning this arm section 29 upon its companion 28, the frictional engagement between the two arm sections being sufficient to maintain them in rigid relation after the desired adjustment has been secured. A handle piece 36 may be added to the arm section 29 to maintain the arm 28—29 in engagement with the stop pin 35 while the arm section 29 is being adjusted with reference to the arm section 28.

The portion of the mechanism thus far described makes it possible to repeat the performance of records without limit. Where it is desired to limit the number of performances I employ braking mechanism which is preferably inclusive of a brake member 37 which is added to the turn table in the form of a depending rim. The second member 38 of the brake is arranged to engage with the braking rim 37 when the turn table is to be stopped. The brake member 38

is arranged to be moved step by step toward its engagement with the brake member 37 to which end the brake member 38 is preferably mounted upon a rotatable disc 39 carrying pins 40 which move with the brake member 38 and which are successively engaged by the outer end of the pin 23 in each bodily revolution thereof. Each time the record is played the wheel 39 is turned a step to bring the brake member 38 a step nearer its engagement with the brake member 37. The number of times that the record is to be played is determined by the number of pins 40 which are successively engaged by the pin 23. The number of times that the record may be played may be adjustably determined by initially setting the brake member 38 which may be done by manually adjusting the disc 39. In this adjustment the number of pins which the pin 23 may successively engage before the brake member 38 engages the brake member 37 is arbitrarily determined. It is possible so to adjust the disc 39 that only one pin 40 will be encountered by the pin 23 before the brake member 38 engages the brake member 37, in which event the record will be played only once. If the disk 39 be adjusted to permit two pins 40 to be successively engaged by the pin 23 before the brake member 38 engages the brake member 37 the record will be played twice, and so on. For convenience of the user, the periphery of the disc 39 is knurled and has thereon a number of indicating marks 41 disposed around its periphery and numbered in correspondence with the number of times the records are to be played, there being an index plate 42 having a mark 43 thereon with which the selected mark 41 is brought into register in determining the adjustment of the brake member 38.

While I have herein shown and particularly described the preferred embodiment of the invention I do not wish to be limited to the precise details of construction shown as changes may readily be made without departing from the spirit of my invention, but having thus described my invention I claim as new and desire to secure by Letters Patent the following: —

1. A phonograph including a turn table for supporting a disc record; a spindle upon which the turn table is secured; mechanism for rotating the turn table spindle; a swinging tone arm structure overlying the turn table and inclusive of a stylus carrying sound box; a track between the tone arm structure and the turn table across a portion of which table the track extends toward the central portion of the turn table, the track being hinged at its outer end and so positioned that it may be lifted at its inner end to be inclined outwardly to lift the tone arm structure on the outward movement of the latter; and gearing in actuating relation to the track and located below the turn table and inclusive of an operating gear element upon the spindle below the turn table and operating to lift and outwardly incline the track to lift and occasion the outward movement of the tone arm structure when the latter is at the inner end of its movement and to lower the track structure out of lifting engagement with the tone arm structure when the latter is at the outer end of its movement.

2. A phonograph including a turn table for supporting a disc record; mechanism for rotating the turn table; a swinging tone arm structure overlying the turn table and inclusive of a stylus carrying sound box; a track between the tone arm structure and the turn table across a portion of which table the track extends toward the central portion of the turn table, the track being hinged at its outer end and so positioned that it may be lifted at its inner end to be inclined outwardly to lift the tone arm structure on the outward movement of the latter; and gearing in actuating relation to the track and located below the turn table and operated by the turn table actuating mechanism to lift and outwardly incline the track to lift and to occasion the outward movement of the tone arm structure when the latter is at the inner end of its movement and to lower the track strucure out of lifting engagement with the tone arm structure when the latter is at the outer end of its movement.

3. A phonograph including a turn table for supporting a disc record; mechanism for rotating the turn table; a swinging tone arm structure overlying the turn table and inclusive of a stylus carrying sound box; a track between the tone arm structure and the turn table across a portion of which table the track extends toward the central portion of the turn table, the track being hinged at its outer end and so positioned that it may be lifted at its inner end to be inclined outwardly to lift the tone arm structure on the outward movement of the latter; and a cam below the turn table in lifting and lowering relation to the track and operated by the turn table actuating mechanism.

4. A phonograph including a turn table for supporting a disc record; mechanism for rotating the turn table; a swinging tone arm structure overlying the turn table and inclusive of a stylus carrying sound box; a track between the tone arm structure and the turn table across a portion of which table the track extends toward the central portion of the turn table, the track being hinged at its outer end and so positioned that it may be lifted at its inner end to be inclined outwardly to lift the tone arm structure on the outward movement of the latter; a cam in lifting and lowering relation to the track and operated by the turn

table actuating mechanism; and mechanism for establishing driving connection between the turn table actuating mechanism and the cam and normally breaking the driving connection between the turn table actuating mechanism and the cam and brought into action, to connect the turn table actuating mechanism with the cam, by the tone arm structure when reaching its inner position.

5. A phonograph including a turn table for supporting a disc record; a spindle upon which the turn table is secured; mechanism for rotating the turn table spindle; a swinging tone arm structure overlying the turn table and inclusive of a stylus carrying sound box; a track between the tone arm structure and the turn table across a portion of which table the track extends toward the central portion of the turn table, the track being hinged at its outer end and so positioned that it may be lifted at its inner end to be inclined outwardly to lift the tone arm structure on the outward movement of the latter; a pinion upon the spindle; a gear wheel for engagement with said pinion and having some teeth omitted to permit the gear wheel and pinion to be normally disengaged; a cam in lifting and lowering relation to the track and operated by said gear wheel; and mechanism for bringing the gear wheel into mesh with said pinion and brought into action by the tone arm structure when reaching its inner position.

6. A phonograph including a turn table for supporting a disc record; a spindle upon which the turn table is secured; mechanism for rotating the turn table spindle; a swinging tone arm structure overlying the turn table and inclusive of a stylus carrying sound box; a track between the tone arm structure and the turn table across a portion of which table the track extends toward the central portion of the turn table, the track being hinged at its outer end and so positioned that it may be lifted at its inner end to be inclined outwardly to lift the tone arm structure on the outward movement of the latter; a pinion upon the spindle; a gear wheel for engagement with said pinion and having some teeth omitted to permit the gear wheel and pinion to be normally disengaged; a cam in lifting and lowering relation to the track and operated by said gear wheel; a pin projecting laterally from and turning with the spindle; an outwardly spring pressed pin turning with the gear wheel; a pin depressor positioned normally to engage the latter pin normally to preserve it out of engagement with the other pin; and mechanism for breaking engagement between said pin depressor and the pin normally engaged thereby and brought into action by the tone arm structure when reaching its inner position.

7. A phonograph including a turn table for supporting a disc record; a spindle upon which the turn table is secured; mechanism for rotating the turn table spindle; a swinging tone arm structure overlying the turn table and inclusive of a stylus carrying sound box; a track between the tone arm structure and the turn table across a portion of which table the track extends toward the central portion of the turn table, the track being hinged at its outer end and so positioned that it may be lifted at its inner end to be inclined outwardly to lift the tone arm structure on the outward movement of the latter; a pinion upon the spindle; a gear wheel for engagement with said pinion and having some teeth omitted to permit the gear wheel and pinion to be normally disengaged; a cam in lifting and lowering relation to the track and operated by said gear wheel; a pin projecting laterally from and turning with the spindle; an outwardly spring pressed pin turning with the gear wheel; a pin depressor positioned normally to engage the latter pin normally to preserve it out of engagement with the other pin; and an arm in turning engagement with the gear wheel to bring the pin turning with the gear wheel out of engagement with the pin depressor and having a portion engaged by the tone arm structure when nearing its inner position to effect the engagement between the arm and said gear wheel.

8. A phonograph including a turn table for supporting a disc record; a spindle upon which the turn table is secured; mechanism for rotating the turn table spindle; a swinging tone arm structure overlying the turn table and inclusive of a stylus carrying sound box; a track between the tone arm structure and the turn table across a portion of which table the track extends toward the central portion of the turn table, the track being hinged at its outer end and so positioned that it may be lifted at its inner end to be inclined outwardly to lift the tone arm structure on the outward movement of the latter; a pinion upon the spindle; a gear wheel for engagement with said pinion and having some teeth omitted to permit the gear wheel and pinion to be normally disengaged; a cam in lifting and lowering relation to the track and operated by said gear wheel; a pin projecting laterally from and turning with the spindle; an outwardly spring pressed pin turning with the gear wheel; a pin depressor positioned normally to engage the latter pin normally to preserve it out of engagement with the other pin; and an arm in turning engagement with the gear wheel to bring the pin turning with the gear wheel out of engagement with the pin depressor and having a portion, in adjustable relation to the balance of the arm, engaged by the tone arm structure when nearing its

inner position to effect the engagement between the arm and said gear wheel.

9. A phonograph including a turn table for supporting a disc record; a spindle upon which the turn table is secured; mechanism for rotating the turn table spindle; a swinging tone arm structure overlying the turn table and inclusive of a stylus carrying sound box; a track between the tone arm structure and the turn table across a portion of which table the track extends toward the central portion of the turn table, the track being hinged at its outer end and so positioned that it may be lifted at its inner end to be inclined outwardly to lift the tone arm structure on the outward movement of the latter; a pinion upon the spindle; a gear wheel for engagement with said pinion and having some teeth omitted to permit the gear wheel and pinion to be normally disengaged; a cam in lifting and lowering relation to the track and operated by said gear wheel; mechanism for bringing the gear wheel into mesh with said pinion and brought into action by the tone arm structure when reaching its inner position; a brake having one member in the form of a rim depending from the turn table and a second member mounted near the first member to turn into engagement therewith; and a plurality of pins moving with the second brake member and successively engageable by the pin moving with the aforesaid gear wheel to turn the second brake member step by step toward engagement with the first brake member.

10. A phonograph including a turn table for supporting a disc record; a spindle upon which the turn table is secured; mechanism for rotating the turn table spindle; a swinging tone arm structure overlying the turn table and inclusive of a stylus carrying sound box; a track between the tone arm structure and the turn table across a portion of which table the track extends toward the central portion of the turn table, the track being hinged at its outer end and so positioned that it may be lifted at its inner end to be inclined outwardly to lift the tone arm structure on the outward movement of the latter; a pinion upon the spindle; a gear wheel for engagement with said pinion and having some teeth omitted to permit the gear wheel and pinion to be normally disengaged; a cam in lifting and lowering relation to the track and operated by said gear wheel; a pin projecting laterally from and turning with the spindle; an outwardly spring pressed pin turning with the gear wheel; a pin depressor positioned normally to engage the latter pin normally to preserve it out of engagement with the other pin; mechanism for breaking engagement between said pin depressor and the pin normally engaged thereby and brought into action by the tone arm structure when reaching its inner position; a brake having one member in the form of a rim depending from the turn table and a second member mounted near the first member to turn into engagement therewith; and a plurality of pins moving with the second brake member and successively engageable by the pin moving with the aforesaid gear wheel to turn the second brake member step by step toward engagement with the first brake member.

11. A phonograph including a turn table for supporting a disc record; a spindle upon which the turn table is secured; mechanism for rotating the turn table spindle; a swinging tone arm structure overlying the turn table and inclusive of a stylus carrying sound box; a track between the tone arm structure and the turn table across a portion of which table the track extends toward the central portion of the turn table, the track being hinged at its outer end and so positioned that it may be lifted at its inner end to be inclined outwardly to lift the tone arm structure on the outward movement of the latter; a pinion upon the spindle; a gear wheel for engagement with said pinion and having some teeth omitted to permit the gear wheel and pinion to be normally disengaged; a cam in lifting and lowering relation to the track and operated by said gear wheel; a pin projecting laterally from and turning with the spindle; an outwardly spring pressed pin turning with the gear wheel; a pin depressor positioned normally to engage the latter pin normally to preserve it out of engagement with the other pin; an arm in turning engagement with the gear wheel to bring the pin turning with the gear wheel out of engagement with the pin depressor and having a portion engaged by the tone arm structure when nearing its inner position to effect the engagement between the arm and said gear wheel; a brake having one member in the form of a rim depending from the turn table and a second member mounted near the first member to turn into engagement therewith; and a plurality of pins moving with the second brake member and successively engageable by the pin moving with the aforesaid gear wheel to turn the second brake member step by step toward engagement with the first brake member.

12. A phonograph including a turn table for supporting a disc record; a spindle upon which the turn table is secured; mechanism for rotating the turn table spindle; a swinging tone arm structure overlying the turn table and inclusive of a stylus carrying sound box; a track between the tone arm structure and the turn table across a portion of which table the track extends toward the central portion of the turn table, the track being hinged at its outer end and so posi-

tioned that it may be lifted at its inner end to be inclined outwardly to lift the tone arm structure on the outward movement of the latter; a pinion upon the spindle; a gear wheel for engagement with said pinion and having some teeth omitted to permit the gear wheel and pinion to be normally disengaged; a cam in lifting and lowering relation to the track and operated by said gear wheel; a pin projecting laterally from and turning with the spindle; an outwardly spring pressed pin turning with the gear wheel; a pin depressor positioned normally to engage the latter pin normally to preserve it out of engagement with the other pin; an arm in turning engagement with the gear wheel to bring the pin turning with the gear wheel out of engagement with the pin depressor and having a portion, in adjustable relation to the balance of the arm, engaged by the tone arm structure when nearing its inner position to effect the engagement between the arm and said gear wheel; a brake having one member in the form of a rim depending from the turn table and a second member mounted near the first member to turn into engagement therewith; and a plurality of pins moving with the second brake member and successively engageable by the pin moving with the aforesaid gear wheel to turn the second brake member step by step toward engagement with the first brake member.

13. A phonograph including a disc record supporting turn table; mechanism for rotating the turn table; mechanism for automatically effecting repetition of the performance of a record; a brake having one member in the form of a rim depending from the turn table and a second member mounted near the first member to turn into engagement therewith; a plurality of pins moving with the second brake member; and a pin movable by the turn table rotating mechanism into engagement with the other pins successively.

14. A phonograph including a disc record supporting turn table; mechanism for rotating the turn table; mechanism for automatically effecting repetition of the performance of a record; a brake having one member in the form of a rim depending from the turn table and a second member mounted near the first member to turn into engagement therewith; and mechanism operated by the turn table rotating mechanism for turning the second brake member step by step toward engagement with the first brake member.

In witness whereof, I hereunto subscribe my name this 28th day of May A. D., 1919.

EDWIN M. KELLOGG.