Sept. 5, 1967 J. E. KIEFER ETAL 3,339,560

TOBACCO SMOKE FILTERS

Filed Aug. 19, 1964

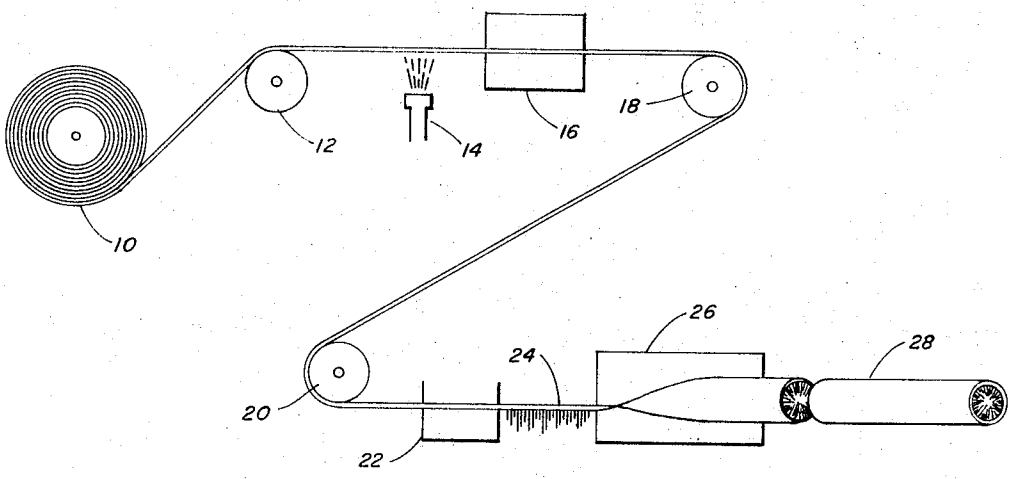

FIG. 1.

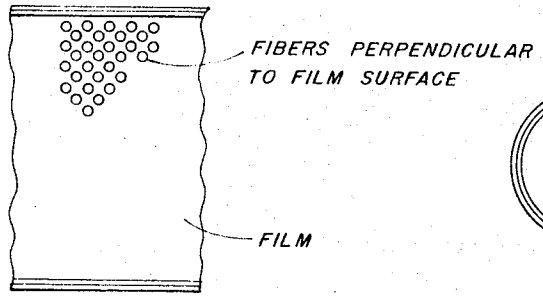

FIG. 2.

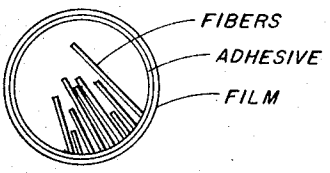

FIG. 4.

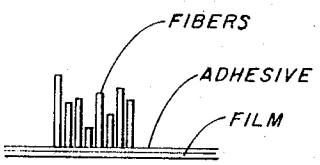

FIG. 3.

JOHN E. KIEFER
CLARENCE E. THOLSTRUP
INVENTOR.

BY R. Frank Smith
Abram W. Hatcher
ATTORNEYS

United States Patent Office 3,339,560 Patented Sept. 5, 1967

3,339,560

TOBACCO SMOKE FILTERS

John E. Kiefer and Clarence E. Tholstrup, Kingsport, Tenn., assignors to Eastman Kodak Company, Rochester, N.Y., a corporation of New Jersey

Filed Aug. 19, 1964, Ser. No. 390,699
1 Claim. (Cl. 131—267)

This invention relates to filter elements. More particularly, it relates to a tobacco smoke filter element made from film and fibers.

For several years it has been thought necessary for the achievement of satisfactory efficiency in the tobacco smoke fibrous filter industry to use tow in which the filaments are oriented substantially horizontally or longitudinally, that is, in the direction of the smoke stream when attached to cigarettes which are smoked. Thus, our coworkers, Crawford and Stevens, disclose in U.S. 2,794,239 use in filter elements of filaments randomly oriented primarily in a longitudinal direction, which they explain as meaning "as a whole longitudinally aligned and . . . in the aggregate in a parallel orientation." Hackney et al. in U.S. 2,805,671 attempt to improve filterability of such an element by adhering to the peripheral surfaces of the matrix filaments a finely divided material in the form of a fuzz of short rod-like fibers not more than 1000 microns in length, the axes of which extend generally at right angles to the direction of gas flow through the filter.

While both the Crawford and Stevens and the Hackney et al. filters have proved highly successful in removing undesirable substances from tobacco smoke, it is apparent that development of a filter which does not require a matrix of substantially longitudinally aligned filaments represents a highly desirable result. After extended investigation, we have developed a filter element which is not composed principally of horizontally aligned continuous filaments but yet characteristically results in effective filtration of tars and nicotine from tobacco smoke.

One object of this invention is to provide a material useful in formation of filter elements. Another object is to provide a filter element of effective filterability which does not require the fibers thereof to be substantially horizontally aligned along the length thereof. A further object is to provide a method of forming a highly efficient composite filter element from film and fibers. Further objects will appear hereinafter.

In its broader aspects our invention involves attaching short fibers perpendicularly to a strip of film and fashioning the film with attached fibers in the form of a tube.

The invention is illustrated in the accompanying drawing in which:

FIG. 1 depicts schematically one way to make the tube filter elements of this invention.

FIG. 2 is a top view, partly in perspective, of the film with attached fibers perpendicular to its surface according to this invention.

FIG. 3 is a side view of the film with fibers attached perpendicularly prior to forming into a tubular element.

FIG. 4 is a cross-section of the filter element of this invention in final form, that is, showing film with attached perpendicular fibers rolled up in tubular form and wrapped as a filter rod.

In FIG. 1 a strip of film is pulled from roll **10** by roller **12** and passed through an adhesive applicator **14** where an adhesive material is added to one side of the film. The adhesive may be sprayed onto the film or wiped on by means of a wick or wet roller. If the adhesive contains water or other volatile material, the film may be dried in oven **16**. The dry film after being conducted over a roll such as **18** is subjected to a treatment which imparts an electrical charge to the film. This may be done

simply by passing the film over a rod or roll **20** made of a high dielectric material such as hard rubber. An alternate method for imparting a static charge to the film consists of passing it between two metal plates connected to a source of electrical power and having a difference of potential of several hundred volts therebetween.

The charged film passes through a chamber **22** containing short fibers. As the fibers come under the influence of the electric field they tend to become aligned parallel to the lines of electric force which intercept the plane of the film in a perpendicular direction. One end of each fiber becomes attached to the adhesive on the film as shown at **24**. FIGS. 2 and 3 show this vertical attachment in more detail. The film containing the attached fibers is then curled into a continuous tube by the horn or garniture **26**. One edge of the film is lapped over the other 1 to 3 mm. The adhesive results in formation of a cylindrical rod. A cross section of such a rod is shown in FIG. 4. The rod is cut into appropriate lengths **28** for cigarette filters.

Material usable for attachment of short fibers perpendicularly according to our invention includes any sheet film on which a static electric charge may be induced. Thus, cellulose acetate, polyethylene, polypropylene, polystyrene, and polyesters such as those derived from terephthalic acid and ethylene glycol or bis(hydroxy methyl)cyclohexane have been found to be useful.

Any fiber which is attracted to an electrostatic force may be used in carrying out the invention. The fiber may be made from the same or a different type polymer from the film. For example, one very useful combination consists of a film from polypropylene, which has a very high surface resistivity and hence can be charged very easily, and fibers of cellulose acetate, which are very effective for removing phenol from a smoke stream. The fibers should have a length of from 2 to 9 mm.

The appropriate adhesive depends upon the combination of film and fiber desired. Thus, a high boiling liquid which is a solvent for both the fiber and the film may be used. For example, the glycerol mono-, di-, and triacetate; the glycerol mono-, di-, and tripropionates; acetate and propionate esters of the polyoxyethylenes; phthalic acid esters of alkyl alcohols; and triethyl citrate make good bonding agents for cellulose acetate.

Neoprene glues, epoxy glues, polyvinyl acetate, polyvinyl chloride, and butadiene-styrene resins were found to be useful adhesives particularly for polyolefin and polyester materials. When the adhesive contains water or solvent, it is desirable to subject the film to a drying or curing step such as shown by dryer **16** in FIG. 1 prior to the application of the electrostatic charge.

Our invention may be illustrated by the following examples.

Example I

A strip of cellulose acetate film, 29-mm. wide and 0.1-mm. thick, was sprayed on one side with glycerol triacetate until the film had increased in weight by 5%. The opposite or dry side of the film was then rubbed with a hard rubber roll in order to include an electrostatic charge on the film. The film was then passed over a thin layer of cellulose acetate fibers in such a way that the side of the film which was wet with the glycerol triacetate passed within 5 mm. of the fibers. The fibers, which had an average length of about 6 mm., became aligned parallel to the lines of electric force and perpendicular to the film with one end of each fiber in contact with the film. The glycerol triacetate solvent for both film and fiber formed a permanent bond between the two. The film containing the perpendicular fibers was then curled into a cylindrical rod with the fibers pointing towards the center of the cylinder. One edge of the film overlapped the other edge

and was bonded thereto by the glycerol triacetate. The rods were cut into 20-mm. tips which were attached to commercial cigarettes. The filter cigarettes were smoked and the amounts of phenol, fluorescent components, and total particulate matter removed by the filter were determined. The results are shown below.

	Percent Removed by Filter	Test Method
Phenol	86	Modification of method described by D. Hoffman and E. L. Wynder, Beitrage Zur Tobakforshung Heft. 3, 101-106.
Fluorescent Material	54	W. V. McConnell, R. C. Mumpower, and G. P. Touey, Tobacco Science, 4, 55-61.
Total Particulate Matter	51	C. L. Ogg, W. W. Bates, Jr., E. C. Cogbill, R. H. Blackmore, and E. L. Petersen. J. Assoc. Official Agric. Chemists 45, No. 3, 540-5.

Example II

A strip of polypropylene film, 29-mm. wide and 0.05-mm. thick, was sprayed on one side with a neoprene adhesive (Carboline neoprene adhesive, obtainable from Carboline Co.) until the film had increased in weight by 5%. An electrostatic charge was induced in the film as in Example I. The film was then passed over a bin which contained 0.4 denier per filament polypropylene fibers. The fibers had an average length of about 5 mm., such length being greater than the radius of the tube. They became aligned parallel to the lines of electric force and perpendicular to the film with one end of each fiber in contact with the film. The treated film was then rolled into a cylindrical tube and made into cigarette filter tips as in Example I. A 20-mm. filter tip removed 63% of the fluorescent material and 61% of the total particulate matter from a cigarette smoke stream when tested by the procedures outlined in Example I.

From the preceding description and examples, it should be apparent that we have provided a novel filter element

made up of a cylindrical film wound as a tube and having short fibers protruding substantially perpendicularly from the film toward the axis of the tube from the points of adhesive attachment thereto.

Although the invention has been described in detail with reference to preferred embodiments thereof, it will be understood that variations and modifications can be effected within the spirit and scope of the invention as described hereinabove and as defined by the appended claim.

We claim:

A filter element of a cylindrical tube of film having adhesively attached to the inner surface thereof a plurality of synthetic fibers having an average length greater than the radius of said tube, said film and fibers being selected from the group consisting of cellulose acetate; polyethylene; polypropylene; polystyrene; and terephthalic acid, ethylene glycol, and bis(hydroxy methyl) cyclohexane polyesters, the adhesive being selected from the group consisting of glycerol mono-, di-, and triacetate; glycerol mono-, di-, and tri-propionate; acetate and propionate esters of the polyoxyethylenes; phthalic acid esters of alkyl alcohols and triethyl citrate; neoprene glues; epoxy glues; polyvinyl acetate; polyvinyl chloride and butadiene-styrene resins, and said fibers further extending substantially perpendicularly from the tube surface in such a manner as to essentially completely fill the tube interior.

References Cited

UNITED STATES PATENTS

1,919,959	7/1933	Minton	131—267 X
2,126,422	8/1938	Tarrant.	
2,325,386	7/1943	Frank.	
2,774,680	12/1956	Hackney et al.	131—267 X
2,815,760	12/1957	Schreus et al.	131—269 X
2,966,157	12/1960	Touey et al.	131—269 X

FOREIGN PATENTS

420,741	12/1934	Great Britain.
941,082	11/1963	Great Britain.

SAMUEL KOREN, *Primary Examiner.*

D. J. DONOHUE, *Assistant Examiner.*