July 15, 1941. C. McDERMOTT 2,249,321

LIQUID LEVEL APPARATUS

Filed Aug. 7, 1939

Fig. 1

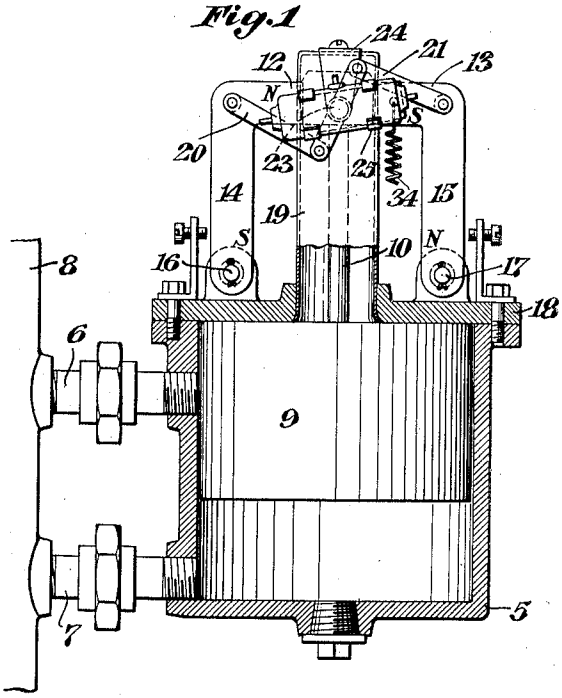

Fig. 3

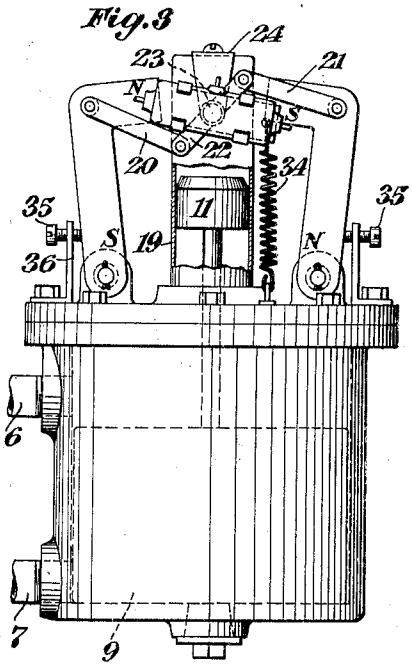

Fig. 2

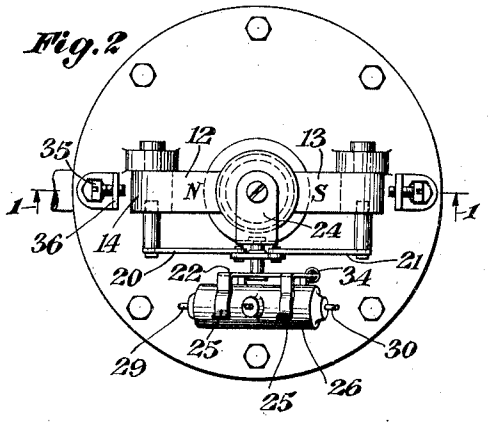

Fig. 4

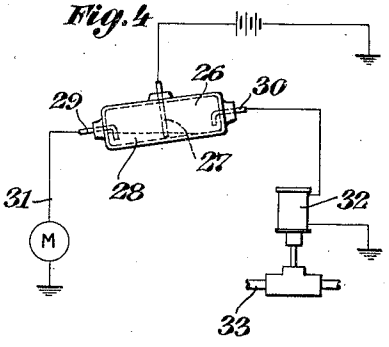

INVENTOR.
Carl McDermott

BY Philip S. McLean
ATTORNEY.

Patented July 15, 1941 2,249,321

UNITED STATES PATENT OFFICE

2,249,321

LIQUID LEVEL APPARATUS

Carl McDermott, Freehold, N. J.

Application August 7, 1939, Serial No. 288,822

10 Claims. (Cl. 200—84)

The invention here disclosed relates to low water alarm and control apparatus and devices similar in character.

Special objects of the invention are to provide a dependable and reliable form of low water automatic cut-off, which will be readily connectible with the boiler to be controlled and which will be of simple inexpensive construction, consisting of but few parts, not liable in any way to get out of order.

Other objects and the novel features of the invention by which the purposes of the invention are attained are set forth or will appear in the course of the following specification.

The drawing accompanying and forming part of the specification illustrates one simple commercial embodiment of the invention. The structure however may be modified and changed in various ways, all within the true intent of the invention as will be apparent from the scope of the appended claims.

Fig. 1 is a front elevation of the automatic cut-off as connected with a boiler and with the flow chamber of the device shown in section.

Fig. 2 is a broken top plan view of the device.

Fig. 3 is a broken part sectional front view showing the parts of the device in another position.

Fig. 4 is a wiring diagram.

As shown more fully in Figs. 1 and 3, the device comprises a float chamber **5**, connected by upper and lower pipes **6**, **7**, with the boiler or other liquid holder **8**, with which the device is associated and which chamber contains a float **9**, having a stem **10**, carrying an armature **11**, of magnetic material to operate as a "keeper" between the opposing poles **12**, **13**, of the cooperatively related permanent magnets **14**, **15**.

The magnets **14**, **15**, are shown pivoted at their lower ends on the studs **16**, **17**, mounted or forming part of the top or cover **18**, of the float chamber. This top preferably is of a magnetic material, so as to constitute a return magnetic path for the pivoted lower ends of the two magnets, the magnets being oppositely polarized as indicated, to provide for this effect and to cause the movable core, in its uplifted position between the magnet poles to serve as a magnetic bridge or keeper, common to the poles.

The armature element **11** is shown as operating in a tubular extension **19**, preferably of non-magnetic material, so as to serve as a diamagnetic separator between the opposing pole faces.

For circuit controlling purposes, the swinging magnets are connected by pivot links **20**, **21**, with opposite ends of a rocker **22**, pivoted at **23**, on a bracket **24**, attached to the housing member **19**. This rocker is shown as having clips **25**, holding the tube **26**, of a mercury switch.

The particular switch illustrated is shown as having a center contact terminal **27**, dipping into the mercury pool **28**, Fig. 4, and two, opposite end terminals **29**, **30**, adapted to alternately, as the tube is rocked in reversed positions, close either the motor circuit **31**, for the burner, or the magnet valve circuit **32**, in the boiler feed line **33**.

A spring **34**, is shown connected with one end of the rocker **22**, for biasing the magnets in a separating direction.

To limit the extent of separation of the magnets and particularly to stop the magnets before the pivots of the links and rocker reach a dead center position, such as might oppose or interfere with the closing movements of the magnets, stop screws **35**, are shown adjustable in brackets **36**. These stop screws are preferably set to limit the outward movement of the magnets to a point where the burner circuit will be fully opened, but the magnets left in position where they will coact and positively draw together under the influence of the magnetic core rising between them.

The parts are designed so that under normal liquid level conditions, the float will support the core or enclosed armature **11**, within such range of the opposing poles **12**, **13**, that the permanent magnets will hold in the position shown in Fig. 1, with the mercury switch maintaining the circuit for the burner which heats the boiler, closed, as indicated in Fig. 4. As water level lowers in the boiler and the armature passes below the point where the poles will coact sufficiently to hold the magnets in the upright position, Fig. 1, the magnets will fall outwardly, assisted by the return spring **34**, and thus through the pivoted links **20**, **21**, swing the switch rocker to the position indicated in Fig. 3, thus to interrupt the burner circuit and in this particular disclosure to close circuit through the magnet valve **32**, for admitting feed water to the boiler through piping **33**. Then as liquid rises to a proper level in the boiler, the float will again carry the armature **11**, up into the region of coaction with the permanent magnet poles, causing the magnets to come together to rock the switch to interrupt the magnet valve circuit and to again close the burner circuit. The armature housing **19**, being of brass or other non-magnetic material forms a stop which the magnet poles may directly engage without adher-

ing thereto. The apparatus therefore is continually in condition to respond and react according to liquid level conditions in the float chamber. By coaction of two permanent magnets, ample power is provided for operating and holding the switch in the normal closed circuit condition. Being free of batteries or external circuit needs, the apparatus is safe and reliable and is in fact, self-protective, because if the permanent magnets should, after long service weaken or lose their magnetism, the device will simply open the circuit to shut off the burner. While the reverse control of the feed water magnet valve is a desirable feature, this is not essential and the switch may be employed simply to hold the heater circuit closed and to open that circuit in the event of low water in the boiler. Various forms of alarms or controls may be controlled or actuated by the device, according to the nature of the apparatus with which it is associated and the purposes for which it is used.

What is claimed is:

1. In liquid level apparatus, the combination of movably mounted permanent bar magnets having angularly extending pole pieces in opposed magnetically cooperative relation, a float actuated armature element movable into position between the angularly extending pole pieces of said magnets to effect magnetic coaction between the same and switch means jointly actuated by movement of said magnets effectuated through said magnetic coaction, said permanent magnets being arranged in upstanding relation pivotally mounted at their lower ends and with the angularly extending pole pieces at their upper ends and projecting toward each other and of opposite polarity and connections extending from said two pivotally mounted magnets for jointly effecting the actuation of said switch means.

2. In liquid level apparatus, the combination of movably mounted permanent magnets in opposed magnetically cooperative relation, a float actuated armature element movable into position between said magnets to effect magnetic coaction between the same, switch means actuated by movement of said magnets effectuated through said magnetic coaction and including a rocker and pivot links from said magnets to opposite ends of said rocker.

3. In liquid level apparatus, the combination of movably mounted permanent magnets in opposed magnetically cooperative relation, a float actuated armature element movable into position between said magnets to effect magnetic coaction between the same, switch means actuated by movement of said magnets effectuated through said magnetic coaction, said permanent magnets being pivotally supported at one end and having swinging movement toward and away from each other, linkage connections between said pivotally supported magnets and switch means and stop means limiting the extent of pivoting movement of said magnets.

4. In liquid level apparatus, a float chamber adapted for connection with a boiler or the like, and having a top of magnetic material, permanent magnets pivoted at their lower ends on said magnetic top and having opposed poles at their upper ends, a tubular housing of non-magnetic material extending from said chamber top up into position between the opposed poles of said magnets, a pivotally mounted rocker, pivot links extending from upper end portions of the magnets to said rocker and control means actuated by said rocker.

5. In liquid level apparatus, a float chamber adapted for connection with a boiler or the like, and having a top of magnetic material, permanent magnets pivoted at their lower ends on said magnetic top and having opposed poles at their upper ends, a tubular housing of non-magnetic material extending from said chamber top up into position between the opposed poles of said magnets, a pivotally mounted rocker, pivot links extending from upper end portions of the magnets to said rocker, control means actuated by said rocker and spring means for biasing said rocker in one direction.

6. In liquid level apparatus, permanent magnets in vertically disposed relation and pivotally supported at their lower ends and with their upper ends in opposing relation, float means responsive to liquid level conditions, an armature actuated thereby for magnetically bridging the opposing upper ends of said pivoted magnets to accomplish swinging of the upper ends of said magnets toward each other and control means jointly actuated by said cooperative swinging magnets.

7. In liquid level apparatus, permanent magnets in vertically disposed relation and pivotally supported at their lower ends and with their upper ends in opposing relation, float means responsive to liquid level conditions, an armature actuated thereby for magnetically bridging the opposing upper ends of said pivoted magnets to accomplish swinging of the upper ends of said magnets toward each other, control means jointly actuated by said cooperative swinging magnets and means for limiting the separating swinging movement of said magnets.

8. In liquid level apparatus, permanent magnets pivotally supported in opposing relation, float means responsive to liquid level conditions, an armature actuated thereby for magnetically bridging the opposing ends of said pivoted magnets to accomplish swinging of said magnets toward each other, control means actuated by said cooperative swinging magnets and including a rocker, pivot links connecting said rocker with said magnets and stop means for limiting the separating movement of said magnets to a position less than a dead center position of the pivotal centers between said magnets, links and rocker.

9. A low water cut-off, comprising a float chamber, a float operating in said chamber, an armature of magnetic material positioned by said float, permanent magnets in upright relation and pivoted at their lower ends to have their upper ends swing toward and away from said armature and a switch rocker jointly actuated by said pivoted permanent magnets.

10. A low water cut-off, comprising a float chamber, a float operating in said chamber, an armature of magnetic material positioned by said float, permanent magnets pivoted to swing toward and away from said armature, a switch rocker actuated by said pivoted permanent magnets, means for biasing said parts in a magnet separating direction and stop means for limiting the extent of such movement.

CARL McDERMOTT.