B. P. BLASKI.

SKYLIGHT.

APPLICATION FILED NOV. 19, 1920.

1,418,061. Patented May 30, 1922.

Fig 1.

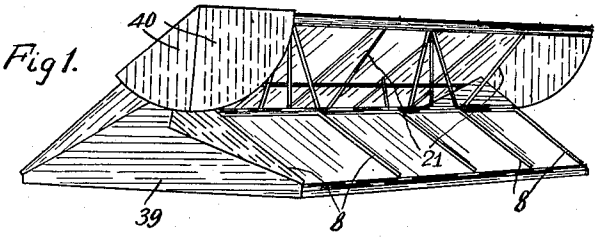

Fig. 3.

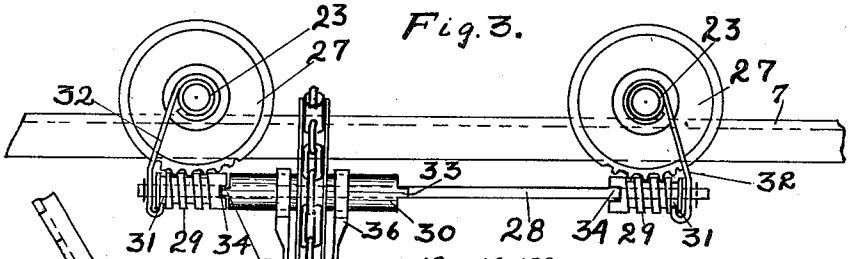

Fig. 4.

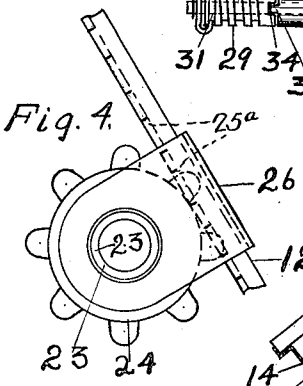

Fig. 2.

Fig. 5.

WITNESS:
August J. Sadoski
Frank L. Sadoski.

INVENTOR.
Benjamin P. Blaski.

UNITED STATES PATENT OFFICE.

BENJAMIN P. BLASKI, OF CHICAGO, ILLINOIS, ASSIGNOR TO BLASKI MANUFACTURING CO., OF CHICAGO, ILLINOIS, A CORPORATION OF ILLINOIS.

SKYLIGHT.

1,418,061. Specification of Letters Patent. Patented May 30, 1922.

Application filed November 19, 1920. Serial No. 425,127.

To all whom it may concern:

Be it known that I, BENJAMIN P. BLASKI, a citizen of the United States, residing in Chicago, in the county of Cook and State of Illinois, have invented certain new and useful Improvements in Skylights, of which the following is the specification.

My invention relates to improvements in skylights and one of the objects thereof is to provide a skylight of such construction that it may be opened and closed with a minimum of effort on the part of the operator and which will admit a maximum amount of light and air.

In its preferred form my invention contemplates a framework for the skylight including upper and lower supporting curbs or members, enclosure means therefor comprising upper and lower sections, means hingedly connecting the upper and lower sections to the upper and lower curbs or members, respectively; and a further object of my invention is to provide one or more pairs of links for supporting the hingedly mounted sections, one link of each pair being pivotally connected at one end to one of said sections and the other link of each pair being pivotally connected to the other of said sections, the respective links of each pair being operated by devices of such construction that relative movement of said sections may be effected, for example, the upper section may be raised and the other section lowered, or vice versa, and the operation of one section is equalized or counterbalanced by the operation of the other section whether said sections be of equal size or weight, or, whether one be of larger size or greater weight than the other.

The co-operating relatively movable sections and operating links and devices therefor are preferably mounted upon each side of an inverted V-shaped framework; and it is a further object of my invention to provide a novel arrangement for selectively manipulating said devices for opening and closing the sections on either side of the framework.

A further object of my invention is to provide novel means on the swinging sections of the skylight of such construction that the joints between the sections and the framework of the skylight will be weathertight when the sections of the skylight are in closed positions.

The invention consists in the novel constructions, arrangements and devices to be hereinafter described and claimed for carrying out the above stated objects and such other objects as will appear from the following description of a certain preferred embodiment illustrated in the accompanying drawings, wherein—

Fig. 1 is a perspective view of a skylight embodying the principles of my invention, the sections of one side being in their open positions;

Fig. 2 is a transverse sectional view, on an enlarged scale, of the skylight;

Fig. 3 is an end elevational view, on an enlarged scale, of the means employed for opening and closing the sections on each side of the skylight;

Fig. 4 is a side elevational view of one of the rotatable or oscillatable members in operative engagement with one of the supporting links for the sections; and

Fig. 5 is a sectional view, on an enlarged scale, taken on any of the lines 1—1 of Fig. 2.

Like characters of reference designate like parts in the several views.

Referring now to the drawings, it will be seen that the framework includes longitudinally extending curbs 2—2 which support transversely extending angle bars 3 to the respective extremities of which are secured inclined angle bars 4—4 connected at their upper ends to a substantially vertically positioned supporting member 5. The supporting members 5 are secured at their lower ends to the respective angle bars 3. Brace bars 6 are connected to the inclined bars 4—4 at their lower ends and at their upper ends to the supporting members 5, respectively. Spreading of the inclined bars 4—4 is prevented by a transversely extending angle bar 7 which may also be connected to the supporting member 5. Each side of the framework, which, generally speaking, is of an inverted V-shape, is closed by an upper section and a lower section.

Each of the lower sections comprises a plurality of transversely extending bars 8, the number depending upon the length of the skylight, which are soldered or otherwise connected at their lower ends to a longitudinally extending curb or supporting member 9 and at their upper ends to a similarly extending member 10. Hinges 11 connect the supporting member 9 to the adjacent curb or supporting member 2. A sup-

porting link 12 is pivotally connected to a lug 13 which is rigidly secured in any desired manner to the under side of the supporting member 10. The bars 8 and the supporting members 9 and 10 are preferably formed of sheet metal and are substantially of the cross section shown in Figs. 2 and 5 of the drawings. It will be apparent that the lower section may be inclined at any desired angle, by raising or lowering the link 12.

Each of the upper sections comprises a longitudinally extending member 14, a similarly extending member 15 and a plurality of transversely extending bars 16 which are rigidly attached at their lower ends to the member 14 and at their upper ends to the member 15, the bars 16 being similar in cross section to the bars 8 of the lower sections. Hinges 17 attached to the lower side of the supporting members 15 connect said members with a longitudinally extending bar 18 mounted on the upper ends of the vertically extending frame members 5. An inverted cap member 19, preferably substantially semi-circular in cross section, extends the entire length of the skylight over the vertically extending portions 15[a] of the supporting members 15, being held in position by strap members 20, the lower ends of which are bent around the rod 18 and the upper ends of which project through the cap member and are bent over against the upper side thereof. The cap member is preferably formed of sheet metal and readily positions itself and yields sufficiently to permit raising and lowering of the upper sections. By substituting springs for the strap members 20, it will be obvious that the cap member 19 might, in that case, be of rigid non-yielding material, if desired. A plurality of supporting arms 21 are pivotally connected at their upper ends to lugs 22, respectively, said lugs being secured to the under side of certain of the bars 16 adjacent the supporting member 14. It will be apparent that the upper section may be inclined at any desired angle by raising or lowering the supporting bars 21.

In order to open and close the sections of the skylight on each side, I provide a pair of longitudinally extending shafts 23 journaled on the brace bars 7 adjacent the meeting edges of the respective co-operating sections. Cog or sprocket wheels 24 and 25 are mounted on each shaft. The supporting bars 12 and 21 are each formed with a series of apertures 25[a], see Fig. 4, which are adapted to receive the teeth of the cog or sprocket wheels, the bars 12 and 21 each being held in operative engagement with its cog or sprocket wheel by a U-shaped yoke member 26. The wheels 24 and 25 are fixed on the shaft 23 and it will be obvious that any rotative movement of the shaft and wheels will be transmitted to and result in longitudinal movement of the arms 12 and 21, since the apertures on the bars or links 12 and 21 in effect constitute racks. It will now be apparent that when the shaft 23, shown at the right-hand side of Fig. 2, for example, is rotated in a clockwise direction, the link 12 will travel downward and the link 21 upward and this movement of the links will carry the upper and lower sections of the skylight into a position substantially as shown on that side of Fig. 2, or into any position intermediate the maximum open position and the closed position. The upper and lower sections are preferably of such dimensions that the weight of the upper section is about one-third less than that of the lower section and the upper section preferably travels a distance about one-third greater than the distance traveled by the lower section, consequently, when the lower section is lowered, it will transmit a force, through the link 12, wheels 24 and 25, and the link 21, to the upper section sufficient to counterbalance it, and vice versa. In other words, the operation of one section substantially equalizes or counterbalances the operation of the other section whether the sections be of equal size and weight, or, whether one be of larger size or of greater weight than the other. The wheels 24 and 25 are of such diameters in relation to each other and to the length of the respective links 12 and 21 that the operation just described is brought about.

The preferred means for rotating the two shafts 23 is shown in Fig. 3. A gear 27 is fixed to each of the shafts 23. A transversely extending shaft 28 carries two worms 29 loosely mounted thereon. Intermediate the two worms and loosely mounted on the shaft 28 is a wheel 30 which is adapted to be moved axially on the shaft 28 into engagement with either of said worms. The worms are each provided with an annular groove 31. The shaft 28 is supported by members 32 the upper ends of which are bent around the respective shafts 23 and the lower ends of which are bent around and project into the annular grooves 31 on the respective worms, thus maintaining the worms in contact with the respective gears 27. Each end of the hub of the wheel 30 is formed with projecting lugs 33 which fit into recesses 34 provided on the adjacent ends of the respective worms. In Fig. 3 the wheel 30 is shown in operative engagement with the worm for driving the shaft 23 on the left-hand side thereof. The periphery of the wheel 30 is grooved to receive an endless chain 35 which extends nearly to the floor of the building and by means of which the operator may slide the wheel 30 on the shaft 28 into engagement with either of the worms 29, the chain being held in operative engagement with the wheel 30 by a guard member 36.

The upstanding flanges 15ª of the members 15 attached to the respective upper sections adjacent the upper edges thereof being covered by the cap member 19, forms a weather-proof joint at the ridge. The frame members 10 and 14 attached to the upper and lower meeting edges of the lower and upper sections, respectively, engage in a manner to provide a weather-proof joint between the two sections. The members 9 attached to the lower sections at their lower sides or edges are provided with downwardly projecting flange portions 9ª which overlap the respective curb or supporting members 2 of the frame, thus providing a weather-proof joint between the lower sections and the frame. The panes of glass 37 are laid in a bed of cement or other plastic material 38, substantially as shown in Fig. 5, which provides a weather-proof joint between the glass and the supporting members therefor. The framework of the skylight is substantially closed at its ends by transversely extending members 39. The upper swinging sections are provided, respectively, with wing members 40 which overlap each other and also overlap the end members 39 to provide a weather-tight structure.

While I have shown and described my invention as embodied in a skylight which occupies only a portion of the roof on which it is placed, it will be apparent that my invention may be readily applied to an entire roof where a large amount of air and light are desired, for example, in public garages, in foundries, and other places where large quantities of obnoxious gases or fumes accumulate. In that case, it may be found desirable to use very little if any, glass in building the sections which obviously may be done without departing from the principles of my invention.

I do not intend to limit my invention to the details of construction shown and described herein, except only in so far as certain of the appended claims are specifically so limited, as it will be obvious that various modifications may be made by those skilled in the art without departing from the principles of the invention.

I claim:

1. In combination, a framework including upper and lower supporting members, closure means for said framework comprising upper and lower sections, means hingedly connecting said upper and lower sections to said upper and lower supporting members, respectively, links pivotally connected at one end to said sections, respectively, and means operatively associated with said links and so adapted that the operation of one of said sections is counterbalanced by that of the other section.

2. In combination, a framework including upper and lower supporting members, closure means for said framework comprising upper and lower sections of unequal width, means hingedly connecting said upper and lower sections to said upper and lower supporting members, respectively, links pivotally connected at one end to said sections, respectively, and means operatively associated with said links and so adapted that the operation of one of said sections is counterbalanced by that of the other section.

3. In combination, a framework including upper and lower supporting members, closure means for said framework comprising upper and lower sections, means hingedly connecting said upper section at its upper side and said lower section at its lower side to said upper and lower supporting members, respectively, links pivotally connected at one end to said sections, respectively, and means operatively associated with said links and so adapted that the operation of one of said sections is counter-balanced by that of the other section.

4. In combination, a framework including upper and lower supporting members, closure means for said framework comprising upper and lower sections, means hingedly connecting said upper and lower sections to said upper and lower supporting members, respectively, links pivotally connected at one end to said sections, respectively, and a device pivotally mounted on said framework and operatively connected with said respective links, said links and device being so adapted that the operation of one of said sections is counterbalanced by that of the other section.

5. In combination, a framework including upper and lower supporting members, closure means for said framework comprising upper and lower sections, means hingedly connecting said upper and lower sections to said upper and lower supporting members, respectively, a plurality of pairs of links for supporting said sections, one link of each pair being pivotally connected at one end to one of said sections and the other link of each pair being pivotally connected to the other of said sections, a shaft, and a plurality of devices mounted on said shaft and operatively connected with said respective pairs of links, said links and said devices being so adapted that the operation of one of said sections is counterbalanced by that of the other section.

6. In combination, a framework including upper and lower supporting members, closure means for said framework comprising upper and lower sections, means hingedly connecting said upper and lower sections to said upper and lower supporting members, respectively, links pivotally connected at one end to said sections, respectively, each of said links having a rack formed in one side thereof, and a pair of

sprocket wheels journaled on said framework and operatively engaging the racks on said links, respectively, the length of said links and the diameters of said wheels being such that the operation of one of said sections is counterbalanced by that of the other section.

7. In combination, a framework including upper and lower supporting members, closure means for said framework comprising upper and lower sections, means hingedly connecting said upper and lower sections to said upper and lower supporting members, respectively, links pivotally connected at one end to said sections, respectively, each of said links having a rack formed in one side thereof, a pair of sprocket wheels journaled on said framework and adapted to engage the racks on said links, respectively, and means to maintain said links with the racks thereof in operative engagement with said respective sprocket wheels, the length of said links and the diameters of said wheels being such that the operation of one of said sections is counterbalanced by that of the other section.

8. In combination, a framework including upper and lower supporting members, closure means for said framework comprising upper and lower sections, means hingedly connecting said upper and lower sections to said upper and lower supporting members, respectively, links pivotally connected at one end to said sections, respectively, each of said links having a rack formed in one side thereof, and a pair of sprocket wheels journaled on said framework and operatively engaging the racks on said links, respectively, the length of said links and the diameters of said wheels being such that the operation of one of said sections is counter-balanced by that of the other section, and the upper section is moved a distance substantially greater than the distance through which the lower section is moved.

9. In combination, a framework including upper and lower supporting members, closure means for said framework comprising upper and lower sections, means hingedly connecting said upper and lower sections to said upper and lower supporting members, respectively, a plurality of pairs of links for supporting said sections, one link of each pair being pivotally connected at one end to one of said sections and the other link of each pair being pivotally connected to the other of said sections, each of said links having a rack formed in one side thereof, a shaft, and a plurality of pairs of sprocket wheels mounted on said shaft and operatively engaging the racks on said respective pairs of links, the length of said links and the diameters of said wheels being such that the operation of one of said sections is counter-balanced by that of the other section.

10. In combination, an inverted V-shaped framework including a ridge supporting member and a lower supporting member on each side thereof closure means for each side of said framework comprising upper and lower sections, means hingedly connecting the upper and lower sections on one side to said ridge member and the adjacent lower supporting member, respectively, means hingedly connecting the upper and lower sections on the other side to said ridge member and the other lower supporting member, respectively, a pair of links for the sections on each side which are pivotally connected at one end to said sections, respectively, devices operatively associated with said respective pairs of links, and means for selectively operating said devices.

11. In combination, an inverted V-shaped framework including a ridge supporting member and a lower supporting member on each side thereof, closure means for each side of said framework comprising upper and lower sections, means hingedly connecting the upper and lower sections on one side to said ridge member and the adjacent lower supporting member, respectively, means hingedly connecting the upper and lower sections on the other side to said ridge member and the other lower supporting member, respectively, a plurality of pairs of links for supporting the sections on each side, one end of each pair on either side being pivotally connected at one end to one of the adjacent sections and the other link of each said pair being pivotally connected to the other of said adjacent sections, a pair of shafts, a plurality of devices mounted on each shaft and operatively connected with the respective pairs of links connected to the sections adjacent thereto, and means for selectively rotating said shafts for the purpose described.

12. In combination, an inverted V-shaped framework including a ridge supporting member and a lower supporting member on each side thereof, closure means for each side of said framework comprising upper and lower sections, means hingedly connecting the upper and lower sections on one side to said ridge member and the adjacent lower supporting member, respectively, means hingedly connecting the upper and lower sections on the other side to said ridge member and the other lower supporting member, respectively, a plurality of pairs of links for supporting the sections on each side, one link of each pair on either side being pivotally connected at one end to one of the adjacent sections and the other link of each said pair being pivotally connected to the other of said adjacent sections, each of said links having a rack formed in one side there-

of, a pair of shafts, a plurality of pairs of sprocket wheels mounted on each shaft and operatively engaging the racks on said respective pairs of links connected to the sections adjacent thereto, and means for selectively rotating said shafts for the purpose described.

13. In apparatus of the class described including a longitudinally extending framework and swinging closure sections for each side thereof, the combination of a pair of shafts, a pair of sprocket wheels mounted on each of said shafts, a pair of links having racks associated with each pair of sprocket wheels, said links being pivotally connected to the respective adjacent sections, and means for selectively rotating said shafts.

14. In apparatus of the class described including a longitudinally extending framework and swinging closure sections for each side thereof, the combination of a pair of shafts, a pair of sprocket wheels mounted on each of said shafts, a pair of links having racks associated with each pair of sprocket wheels, said links being pivotally connected to the respective adjacent sections, a third shaft, mechanisms mounted on said third shaft and operatively connected with the two respective shafts first mentioned, and driving means slidably mounted on said third shaft and adapted to operatively engage either of said mechanisms.

15. In apparatus of the class described including a longitudinally extending framework and swinging closure means for each side thereof, the combination of a pair of shafts, means mounted on said shafts and adapted upon rotation of the shafts to manipulate said closure means, respectively, a gear mounted on each of said shafts, a third shaft, worms mounted on said third shaft and meshing with said gears, respectively, and driving means slidably and rotatably mounted on said third shaft and adapted to operatively engage either of said worms.

16. In apparatus of the class described including a longitudinally extending framework and swinging closure means for each side thereof, the combination of a pair of shafts, means mounted on said shafts and adapted upon rotation of the shafts to manipulate said closure means, respectively, a gear mounted on each of said shafts, a third shaft, worms loosely mounted on said third shaft, means to hold said worms in mesh with said gears, respectively, and a driving wheel loosely mounted on said third shaft intermediate said worms, said wheel being adapted to interlock with either of said worms for the purpose described.

17. In combination, a framework including upper and lower supporting members, closure means for said framework comprising upper and lower sections, means hingedly connecting said upper section at its upper side and said lower section at its lower side to said upper and lower supporting members, respectively, a weather-strip fixed to the lower section adjacent its lower edge and adapted to overlap said lower supporting member, interengaging weather-strips on the meeting edges of said sections, and interengaging weather-strips on the framework and the upper section adjacent its upper edge.

18. In combination, an inverted V-shaped framework including a ridge supporting member and a lower supporting member on each side thereof, closure means for each side of said framework comprising upper and lower sections, means hingedly connecting the upper and lower sections on one side to said ridge member and the adjacent lower supporting member, respectively, means hingedly connecting the upper and lower sections on the other side to said ridge member and the other lower supporting member, respectively, a weather-strip fixed to each of the lower sections adjacent the lower edges thereof and adapted to overlap the adjacent lower supporting member, interengaging weather-strips on the meeting edges of the respective sections, weather-strips fixed to the upper sections adjacent the upper edges thereof, said last mentioned weather-strips having upstanding flanges, and a ridge cap positioned over said upstanding flanges.

19. In combination, an inverted V-shaped framework including a ridge supporting member and a lower supporting member on each side thereof, closure means for each side of said framework comprising upper and lower sections, means hingedly connecting the upper and lower sections on one side to said ridge member and the adjacent lower supporting member, respectively, means hingedly connecting the upper and lower sections on the other side to said ridge member and the other lower supporting member, respectively, and closure means for each end of said framework comprising end members secured to the respective ends of the framework, and overlapping wing members secured to the ends of the respective upper sections, the wing members also overlapping said end frame members for the purpose described.

20. In combination, an inverted V-shaped framework including a ridge supporting member and a lower supporting member on each side thereof, closure means for each side of said framework comprising upper and lower sections, means hingedly connecting the upper and lower sections on one side to said ridge member and the adjacent lower supporting member, respectively, means hingedly connecting the upper and lower sections on the other side to said ridge member and the other lower

supporting member, respectively, a weather-strip fixed to each of the lower sections adjacent the lower edge thereof and adapted to overlap the adjacent lower supporting member, interengaging weather-strips on the meeting edges of the respective sections, weather-strips fixed to the upper sections adjacent the upper edges thereof, said last mentioned weather-strips having upstanding flanges, and closure means for each end of said framework comprising end members secured to the respective ends of the framework, and overlapping wing members secured to the ends of the respective upper sections, the wing members also overlapping said end frame members for the purpose described.

21. In combination, a framework including upper and lower supporting members, closure means for said framework comprising upper and lower sections, means hingedly connecting said upper and lower sections to said upper and lower supporting members, respectively, links pivotally connected at one end to said sections, respectively, and means operatively associated with said links and adapted to effect relative longitudinal movement of said links, for the purpose specified.

22. In combination, a framework including upper and lower supporting members, closure means for said framework comprising upper and lower sections, means hingedly connecting said upper section at its upper side and said lower section at its lower side to said upper and lower supporting members, respectively, links pivotally connected at one end to said sections, respectively, and means operatively associated with said links and adapted to effect relative longitudinal movement of said links, for the purpose specified.

23. In combination, a framework including upper and lower supporting members, closure means for said framework comprising upper and lower sections, means hingedly connecting said upper and lower sections to said upper and lower supporting members, respectively, links pivotally connected at one end to said sections, respectively, each of said links having a rack formed in one side thereof, and a pair of sprocket wheels journaled on said framework and operatively engaging the racks on said links, respectively, whereby relative longitudinal movement of said links may be effected, for the purpose specified.

24. In combination, a framework including upper and lower supporting members, closure means for said framework comprising upper and lower sections, means hingedly connecting said upper and lower sections to said upper and lower supporting members, respectively, links pivotally connected at one end to said sections, respectively, each of said links having a rack formed in one side thereof, a pair of sprocket wheels journaled on said framework and adapted to engage the racks on said links, respectively, and U-shaped yoke members associated with said sprocket wheels through which the respective links extend, for the purpose specified.

25. In combination, a framework including upper and lower supporting members, closure means for said framework comprising upper and lower sections, means hingedly connecting said upper and lower sections to said upper and lower supporting members, respectively, links pivotally connected at one end to said sections, respectively, and means operatively associated with said links and so adapted that relative longitudinal movement of said links may be effected and the upper section moved a distance substantially greater than the distance through which the lower section is moved.

26. In combination, an inverted V-shaped framework including a ridge supporting member and a lower supporting member on each side thereof, closure means for each side of said framework comprising upper and lower sections, means hingedly connecting the upper and lower sections on one side to said ridge member and the adjacent lower supporting member, respectively, means hingedly connecting the upper and lower sections on the other side to said ridge member and the other lower supporting member, respectively, a pair of links for the sections on each side which are pivotally connected at one end to said sections, respectively, and devices operatively associated with said respective pairs of links, for the purpose specified.

27. In combination, an inverted V-shaped framework including a ridge supporting member and a lower supporting member on each side thereof, closure means for each side of said framework comprising upper and lower sections, means hingedly connecting the upper and lower sections on one side to said ridge member and the adjacent lower supporting member, respectively, means hingedly connecting the upper and lower sections on the other side to said ridge member and the other lower supporting member, respectively, a plurality of pairs of links for supporting the sections on each side, one end of each pair on either side being pivotally connected at one end to one of the adjacent sections and the other link of each said pair being pivotally connected to the other of said adjacent sections, a pair of shafts, and a plurality of devices mounted on each shaft and operatively connected with the respective pairs of links connected to the sections adjacent thereto, for the purpose specified.

BENJAMIN P. BLASKI.