May 23, 1944. G. J. HOLLER 2,349,726

DISPENSER FOR EXTRUSILE SUBSTANCES

Filed June 18, 1942

FIG 1

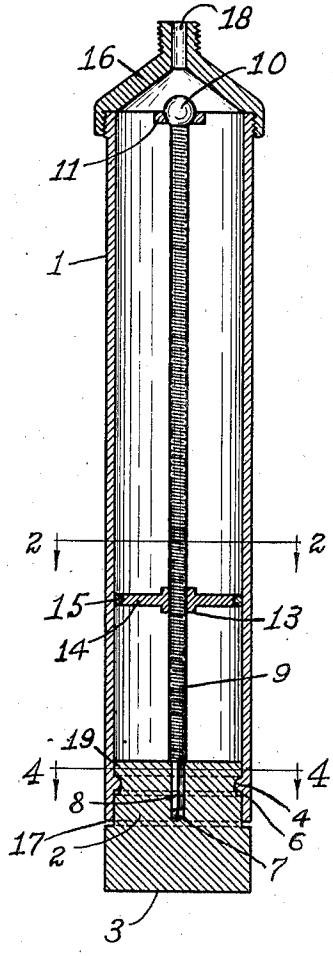

FIG 2

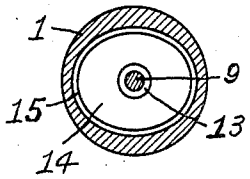

FIG 3

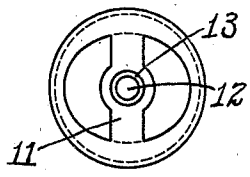

FIG 6

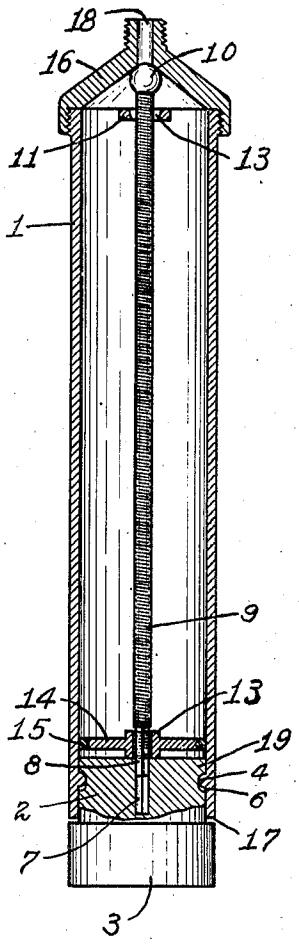

FIG 4

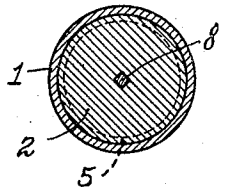

FIG 5

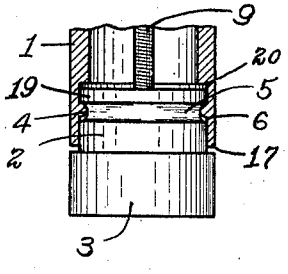

INVENTOR
George J. Holler
BY
W. J. Keefer
ATTORNEY

Patented May 23, 1944

2,349,726

UNITED STATES PATENT OFFICE

2,349,726

DISPENSER FOR EXTRUSILE SUBSTANCES

George J. Holler, Bridgeport, Ohio

Application June 18, 1942, Serial No. 447,488

4 Claims. (Cl. 222—390)

This invention relates to devices for preserving and dispensing extrusile substances, such as tooth paste, shaving cream, greases, and like substances.

One of the objects of the invention is to provide a device of the character mentioned which, when the contained substance has been exhausted, can be refilled.

Another object is to provide a dispenser of the kind mentioned in the construction of which while metals may be used they are not essential, but which may be made throughout of materials commonly known as "plastics," or of wood, or any other desired material.

Another object is to provide a device of the character mentioned of tubular form having an internal disc operated by a threaded rod and so constructed that when the disc is retarded to its lowermost position, further rotation of the threaded rod will not result in stripping the threads from either the disc or the rod.

Other objects will be apparent from a reading of this specification, and from an examination of the accompanying drawings, in which—

Figure 1 is a longitudinal sectional view of a tube embodying my invention;

Figure 2 is a transverse section taken on line 2—2, of Fig. 1;

Figure 3 is a transverse plan of the upper or dispensing end of the tube with the head removed, showing the bearing yoke;

Figure 4 is a transverse section on line 4—4, of Fig. 1;

Figure 5 is a fragmentary view of the lower part of the assembled device partly in section and partly in elevation, taken at right angles to the view shown in Fig. 1; and

Figure 6 is a view similar to that illustrated in Fig. 1, showing the disc completely retarded and the rod advanced so that its threads are disengaged from the threads of the disc.

In said drawing, the numeral 1 indicates the barrel of a tube, formed of rigid, non-collapsible material, such as any of the many plastic materials developed in recent years for use in making devices of this kind. The exterior surface of said tube may be either circular or polygonal in form, and its interior surface at its rear or lower end is circular and has received therein a rotating knob 2.

The knob 2 has a portion 3 extending below or beyond the end of the tube 1 so that it may be grasped between the fingers and thumb of the user for effecting rotation of the knob 2 with respect to the tube 1. If desired, in order to facilitate rotation of the knob, its lower or exposed portion 3 may be fluted or knurled. The knob 2 is normally held in position in the tube 1 by annular beads or an annular tongue 4 formed on the interior surface of the tube 1, which beads or tongue is received within an annular groove 5 formed in the knob 2. The groove 5 is somewhat wider than the tongue 4, as shown at 6 in Figs. 1, 5 and 6 so as to allow some slight longitudinal movement of the knob 2 with respect to the tub 1, as will be hereinafter mentioned.

Formed centrally within the forward or upper part of the knob 2 is a rectangular or polygonal well 7 within which is slidably received the similarly shaped end 8 of a rod 9. The transverse dimensions of said rod end correspond sufficiently closely with those of said well that rotation of the knob will effect corresponding rotation of the rod 9. The other end of said rod forms a ball or head 10 of somewhat greater diameter than the body or shank of said rod. The tube 1 has attached thereto or formed integrally therewith a yoke 11 (illustrated in plan in Fig. 3) having a central aperture 12 affording a bearing for the rod 9, and surrounded by a seat 13 for said head 10. The diameter of the aperture 12 is sufficiently larger than that of the rod 9, that the body of the rod will move freely within said aperture, but the head 10 is somewhat larger than said aperture so that it will not pass therethrough.

The rod 9 is threaded throughout that portion of its length extending from the head 10 to the rectangular portion 8 and said threaded portion is designed to operate within the correspondingly threaded hub 13 of a disc 14.

The disc 14 and the interior walls of the tube 1 above the knob 2, preferably define an ellipse, as is clearly illustrated in Fig. 2, so as to prevent rotation of the disc with respect to the tube, and so assure its movement longitudinally of the tube when the rod 9 is rotated. Manifestly, however, any other shape except circular would do as well.

The disc may, if desired, be supplied with a gasket or packing 15 to form a tight joint with the adjacent walls of the tube 1.

The upper end of the tube 1 is normally closed by a cap 16 threaded upon the former, as shown in Figs. 1 and 6. Said cap is so formed interiorly thereof that if the rod 9 be rotated so as to retract the disc to a position in contact with the adjacent face of the knob 2, and rotation be continued thereafter, the rod 9 will be permitted to advance within the tube a sufficient distance to enable the threads of the rod 9 to

clear those of the hub 13 (as illustrated in Fig. 6), and thus avoid stripping of the threads. In that position the head 10 will be in contact with the adjacent walls of the cap 16, or substantially so. This construction is designed to render possible the rapid retraction of the disc 14, for refilling the tube, by mechanical means, as by pressing the knob 2 agains a moving belt, the face of a rotating disc, or the periphery of a rotating wheel.

Now if the disc 14 should by chance be thrown out of engagement with the threads of the rod 9 while the tube is being used, there is sufficient play between the knob 2 and the tube 1 to allow the disc 14 to be forced, by manual pressure applied to the knob, far enough forward to effect engagement of the threads of the rod 9 with those of the disc 14. This play is most clearly illustrated in Fig. 5, as at the shoulders 20 and 17, and the excess width of the groove 5 over that of the tongue or beads 4.

Manifestly, the mouth 18 of the cap 16 may be closed by any desired form of closure (not shown) when the tube is not in use.

It is intended that there will be sufficient "give" or elasticity in the tube 1 that in assembling the device the tongue or beads 4 will ride over the shoulder 19 of the knob 2 and snap into position within the groove 5, as shown in Figs. 1, 5 and 6.

In assembling the device, the packing 15 is placed around the disc 14, and the latter is then placed in the tube 1. The rod 9 is then inserted and given a slight turn so as to place its threads in engagement with the threads of the disc. The knob 2 is then snapped into position, and, if necessary, the rod 9 is rotated sufficiently to cause its square end 8 to register with and be received within the well 7, and the rod 9, by pressure applied to the head 10, shoved down until the disc 14 (or its hub 13) is in contact with the adjacent face of the knob 2.

The tube is then ready to be filled, and the filling is accomplished by forcing the substance to be contained into the open upper end of the tube about the yoke 11. After the tube has been filled, the cap 16 is screwed into position, the closure applied, and tube and contents are ready for sale or use.

In use, manifestly rotation of the knob 2 will rotate the rod 9 which, by reason of its threaded relationship with the disc 14, will force the disc, and with it, the contained substance, upward toward the mouth of the tube. When the disc has been advanced until it touches the yoke 11 further rotation of the knob in a forward direction will be stopped, and, since rotation forward is accomplished by manual operation, there is little danger of stripping of the threads of the rod 9 or the disc 14 at this end of the tube.

In refilling, the disc may be retarded by manual operation of the knob, or by mechanical operation, as hereinbefore explained. The cap 16 may then be removed, and, if desired, the tube cleansed of all unused contents before being refilled.

I claim—

1. A tube for extrusile substances having a disc longitudinally slidable therein, a rod upon which the disc is threaded, a bearing at each end of the tube for the rod so constructed as to admit of longitudinal sliding movement of the rod with respect to the tube and with respect to its rotating means, and means for rotating the rod by force applied without the tube.

2. A tube for extrusile substances having a disc longitudinally slidable therein, a rod upon which the disc is threaded, a bearing at each end of the tube for the rod so constructed as to admit of longitudinal sliding movement of the rod with respect to the tube and with respect to its rotating means, means normally limiting the longitudinal movement of the rod within the tube, and means for rotating the rod, the rod remaining in engagement with its rotating means throughout the limits of its longitudinal movement within the tube but automatically disengaging itself from the disc when rotated beyond the extent necessary to retract the disc to the limit of its movement at the end of the tube opposite its mouth.

3. A tube for extrusile substances having a disc longitudinally slidable therein, a rod upon which the disc is threaded, a bearing at each end of the tube for the rod so constructed as to admit of longitudinal sliding movement of the rod with respect to the tube and with respect to its rotating means, means normally limiting the longitudinal movement of the rod within the tube, and means for rotating the rod, the rod remaining in engagement with its rotating means throughout the limits of its longitudinal movement within the tube but automatically disengaging itself from the disc when rotated beyond the extent necessary to retract the disc to the limit of its movement at the end of the tube opposite its mouth, and means permitting reengagement of the disc with the rod by the application of manual pressure to the rotating means while rotating said means in the opposite direction to that which resulted in the disengagement.

4. A tube for extrusile substances having a disc longitudinally slidable therein, means for preventing rotation of the disc with respect to the tube, a rod mounted centrally within the tube and being threaded through the disc, and a knob at one end of the tube for rotating the rod, the rod being slidably received within the knob so as to admit of longitudinal motion of the rod with respect to the knob, means limiting the longitudinal movement of the rod away from the knob to an extent sufficient to disengage the threads of the rod from those of the disc while the rod remains in rotatable engagement with the knob, the knob being mounted in the tube in such a way that reengagement of the threads of the rod with those of the disc can be effected by pressing the knob forwardly within the tube and rotating it.

GEORGE J. HOLLER.