Dec. 22, 1964 F. P. BURROUGHS 3,162,259

SORTING MACHINE POCKET

Filed Feb. 20, 1963 2 Sheets-Sheet 1

Fig. 1

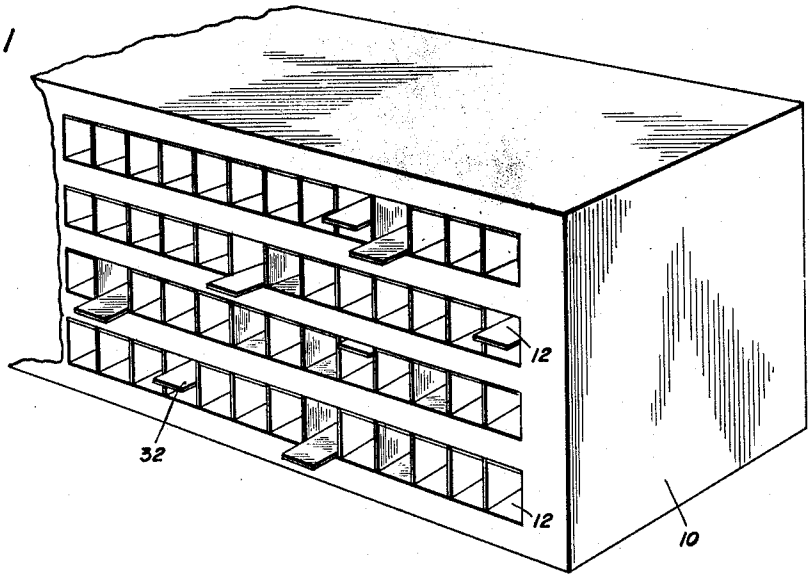

Fig. 2

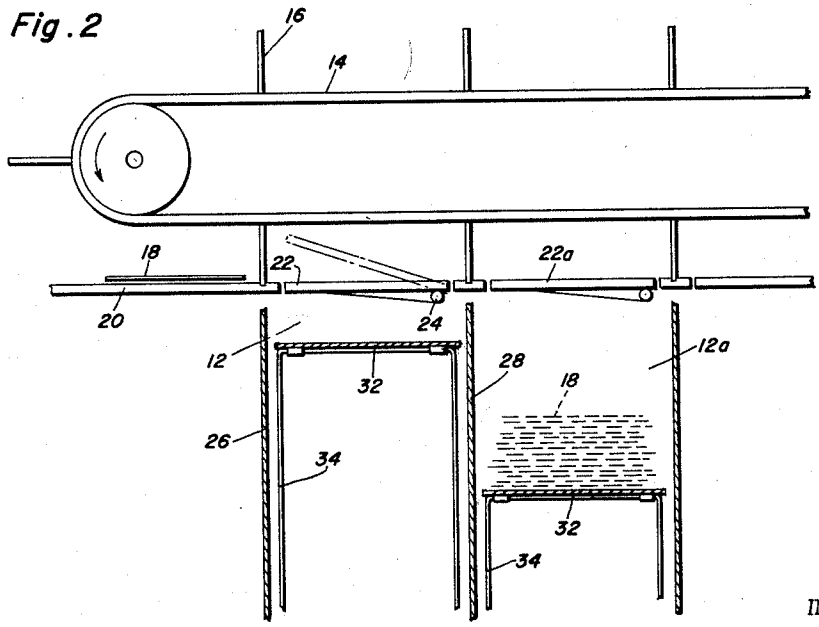

INVENTOR

Franklin P. Burroughs

BY Joseph A. Genovese &
Max L. Libman

ATTORNEYS

Dec. 22, 1964 F. P. BURROUGHS 3,162,259

SORTING MACHINE POCKET

Filed Feb. 20, 1963 2 Sheets-Sheet 2

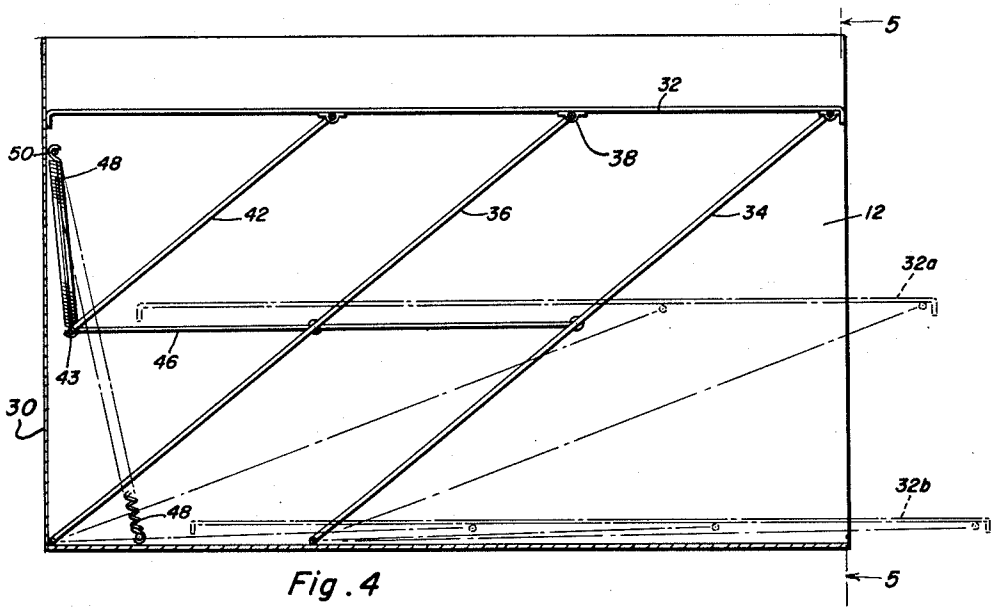

Fig. 4

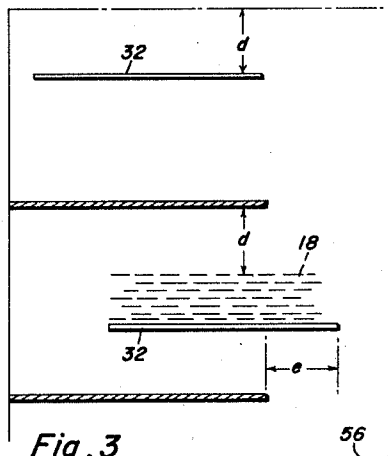

Fig. 3

Fig. 5

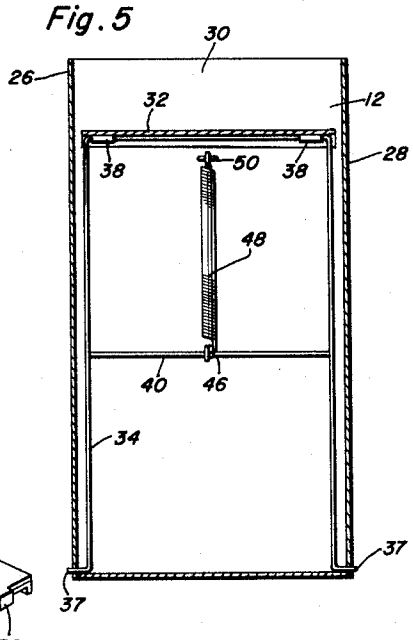

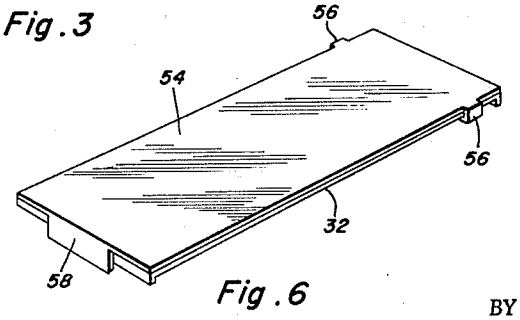

Fig. 6

INVENTOR

Franklin P. Burroughs

BY Joseph A. Genovese &
Max L. Libman

ATTORNEYS

United States Patent Office 3,162,259 Patented Dec. 22, 1964

3,162,259

SORTING MACHINE POCKET

Franklin P. Burroughs, Kensington, Md., assignor, by mesne assignments, to Control Data Corporation, Minneapolis, Minn., a corporation of Minnesota

Filed Feb. 20, 1963, Ser. No. 259,885
8 Claims. (Cl. 177—230)

This invention relates to sorting machines and particularly to an improved pocket structure for machines which sort individual articles to a plurality of output pockets. The term "pocket" as used herein is defined as a bin, box, compartment, receptacle or any other device capable of accepting articles.

Sorting equipment is widely used to sort numerous kinds of articles, and often the nature of the articles to be sorted is responsible for specific sorting-machine problems. My invention overcomes various problems peculiar to sorting letter mail, although sorting equipment for other flat objects, e.g., business machine cards, can benefit from my invention. To understand the significance of my invention, it may be assumed that my pocket structure is used as the output of a letter sorting machine similar to the machine disclosed in the Rabinow-Kamm Patent No. 2,901,089 or in the Rabinow-Rosenberg Patent No. 3,080,072, or the Rabinow Patent No. 2,961,093, or many others.

Comparatively high speed sorting of flat articles by machine introduces two problems with which my invention is concerned. One is that the sorted articles tend to flutter, twist and turn as they enter the pocket structure. The difficulties caused by uncontrolled motion of a letter entering a pocket structure are evidenced by the Rabinow Patent No. 2,904,335 disclosing means for overcoming this very problem. The other problem with which my invention is concerned is the pocket structure becoming full quickly and having to be emptied often. This is readily understood by considering, for example, that a business district will have many more letters than a suburban area in a given postal sorting center.

An object of my invention is to provide a pocket structure with a movable support for the bottom thereof, where the support moves downward in accordance with the weight of the articles deposited thereon under the control of a unique linkage and tension spring arrangement. In other words, as articles are deposited on the support, the support moves downwardly keeping the distance between the top article and the entrance of the incoming articles approximately the same. In this way the distance through which the articles must move in an unconstrained manner, is maintained approximately the same so that the behavior of the articles in unconstrained flight can be predicted with reasonable accuracy. By keeping this distance small, the chance of a letter turning over as it enters the pocket is eliminated. This is important in handling letter mail because considerable other automatic equipment requires proper "facing" of the letters.

A feature of my pocket structure is that the articles do not become inverted, i.e. the sorted letters will remain facing the same direction in entering my pocket structure. Deep pockets having a relatively large capacity for sorted letters are offenders of the letter facing requirement unless some means are used to prevent this. The Rabinow Patent No. 2,904,335 provides one solution to this problem, and my invention provides another.

Another object of my invention is to provide means for alleviating the previously mentioned problem of certain pockets becoming quickly filled, as follows. The real difficulty is that a clerk observing the pockets of the machine must watch many of them and as one becomes

nearly full, he must manually withdraw the stack of letters from the pocket. If he fails to see a full pocket, the sorting machine must be stopped. Many machines have level-detectors which automatically stop the machine when any one of the pockets becomes full. It is unsatisfactory to stop a sorting machine, and if the source of shut-down discussed above could be eliminated, the operation of the entire machine would be more satisfactory.

In accordance with my invention, the support of the letters in the pocket moves in so that an edge of the support advances outwardly of the machine as it moves downward due to the weight of the letters. Thus, the outwardly advanced edge of the support provides a visual signal for the clerk whose task is to empty the full pockets.

I realize that electrical signal devices could be installed to serve the same purpose, for instance a light could be illuminated indicating a full pocket. However, considering the fact that some letter sorting machines sort to 1,000 pockets, and each lamp would have to have a switch, wiring, and be connected with a source of electrical potential, the expense and complexity are significant. In contrast, the visual indication provided by my invention is obtained at no additional cost since it is an inherent part of my means to lower the letter support as letters are deposited thereon.

In "sweeping" a sorting machine (removing the stacks of articles from the individual pockets) the clerk must reach into the pocket with one hand and withdraw the stack of letters. A feature of my invention, which is integrated with the visual indicator and movable support, is that as the support moves downwardly and outwardly with respect to a side of the sorting machine, the stack of letters is more or less "presented" to the clerk so that he does not have to reach into the pocket structure, or if he elects to reach into the pocket, he does not have to reach deeply into the same. Thus, sweeping becomes easier, safer and faster.

For an invention like mine to be practical, it must be an inexpensive device because many units are required in a single sorting machine. Therefore, another object of my invention is to provide a pocket structure fulfilling the foregoing objectives, which is inherently inexpensive and simple.

Other objects and features of importance will become apparent in following the description of the illustrated forms of the invention which are given by way of example only.

FIGURE 1 is a fragmentary respective view showing a part of a sorting machine equipped with pockets possessing the features of my invention.

FIGURE 2 is a schematic view showing a conveyor of the sorting machine of FIGURE 1 and the relationship of two of my pocket structures.

FIGURE 3 is a schematic view showing how the distances discussed before are maintained approximately constant and also showing how the stack of letters in one of the pockets is automatically moved outwardly of the pocket as the pocket becomes full.

FIGURE 4 is a side sectional view of my pocket structure with several positions of the article support shown in dotted lines.

FIGURE 5 is a sectional view of the pocket structure taken on the line 5—5 of FIGURE 4.

FIGURE 6 is a perspective view showing a modification of the article support.

Sorting machine 10 in FIGURE 1 represents any kind of machine where individual articles are sorted to many different pockets 12. The specific mechanism for moving the articles in the sorting machine forms no part of my invention and therefore I have shown (FIGURE 2) and endless conveyor 14 having a plurality of pushers 16

which move articles 18 along a supporting surface 20. The surface 20 is interrupted along its length by gates 22 mounted for upward pivotal movement on spindles 24 so that the articles 18 are required to enter one of the pockets 12, 12*a*, etc. depending on the position of the gate 22, 22*a* etc. The entire conveyor mechanism, the gates and supporting surface 20 can be assumed to be similar or identical to those disclosed in Patent No. 3,080,072.

FIGURE 3 shows two pockets, each provided with a letter support 32. With no letters on the support (upper pocket), the support remains in a rest position a vertical distance *d* from the entrance to the pocket (also see FIGURE 2). As articles accumulate on support 32 (lower pocket of FIGURE 3), the support moves down and to the right. The extent of downward movement is such that distance *d* is approximately preserved. The extent of outward movement 3 of support 32 is sufficient to provide a visual indication of a full pocket and make it more convenient to manually empty the pocket.

Considering the details of my pocket, reference is made to FIGURES 4 and 5 where pocket 12 has side walls 26, 28 and means, e.g., back wall 30, to hold the side walls parallel. It is understood that walls 26, 28 can be party walls (FIGURE 1) which are shared by adjacent pockets.

Support 32 for the articles is located between walls 26 and 28. The support is preferably made of a flat panel with two or more down-turned edges for rigidity. Support 32 is connected with walls 26, 28 by means of a set of links which constrains the movement of support 32 in a manner that it remains horizontal while moving downward and outward through the open front of the pocket (positions 32*a* and 32*b* in FIGURE 4) due to the weight of the articles deposited on the support. The linkage consists of two similar substantially U-shaped members 34, 36 pivotally connected at their upper ends to the bottom of support 32 and pivotally connected to walls 26, 28 at their lower ends. Each link (FIGURE 5) has a pair of sides with outwardly turned lower ends 37 extending through bearing-apertures in walls 26, 28. The upper part of the U-shaped link is suitably connected to support 32, for example by passing through apertures in the downturned edges of support 32 (not shown) or through sleeve bearings 38 secured to or formed integral with support 32. Transverse cross braces 40 are attached to the sides of the two U-shaped links. The third link 42 of the set (FIGURE 4) is shorter than the others and is formed as a rectangle. It is connected at its upper side to support 32 in a manner identical to link 34, and the lower member 43 of link 42 is at the same elevation as the cross braces 40 of links 34, 36. A synchronizing link 46 is pivoted to the cross braces 40 of link 34, 36 and to the cross member 43 of link 42. The physical connection of the synchronizing link to members 40 and 43 can be made in any manner, for instance by having eyes formed therein through which members 40 and 43 pass.

A substantially linear spring 48 is anchored at its upper end to the pocket structure, for instance by being hooked to an eye 50, and it is anchored at its lower end to the cross member 43. The spring yieldingly opposes the downward and forward motion of support 32 to the rest position when it is unloaded. The location of the spring 48 at the rear of the pocket is important because it does not interfere with the letters entering the pocket and the yielding opposition provided by the spring to downward and outward motion of the support is applied at three different places along the length of the support by way of the synchronizing link 46 and the three links 34, 36 and 42.

FIGURE 6 shows a modification where support 32 is provided with an extension slide 54 on its top surface. The extension slide is a shelf suitably connected to support 32, for instance by guides 56 which hook the side edges of support 32. Finger grip 58 is connected to the front position shown in FIGURE 6 by striking the front edge of support 32. The guides 56 also function as a stop by striking the down-turned front edge of support 32 to limit the outward motion of slide 54 with respect to support 32.

It is understood that various changes, alterations, modifications and the like may be made without departing from the protection of the following claims.

I claim:

1. In a sorting machine having a plurality of pockets to which articles are sorted, the improvement comprising a pocket structure having a fixed part and an article support which moves in response to the weight of the articles thereon and which provides a visual signal to indicate the presence of articles in the pocket solely by the position of the support, said support being in a first elevated position with respect to the machine when unloaded, means connected to said support to constrain the motion of said support to a predetermined path as it becomes loaded with sorted articles so that said support assumes a second lowered position with respect to the machine when loaded with articles, said second position being such that a part of said support projects outwardly from a side of the machine thereby serving as a visual indicator of the pocket being full and also presenting portions of the article support outwardly from said machine side to facilitate pocket-unloading, said constraining means including a pair of links pivoted at one set of ends to said fixed part and the other set of ends pivoted to the support to cooperate with said part and said support and form a parallelogram linkage, and a synchronizing link pivoted to both of said links intermediate the ends thereof thereby requiring said pair of links to operate in unison and to remain parallel during all positions of said support.

2. The subject matter of claim 1 and resilient means for yieldingly opposing the movement of said support as it moves from said first to said second position and for returning said support to said first position when the pocket is unloaded, said resilient means being located substantially entirely above said support when said support is in said lowered position so that the resilient means are clear of underside of said support.

3. The subject matter of claim 1 and a flat slide connected with said support and movable parallel to said support to provide an extension of said support to further facilitate unloading the pocket.

4. A pocket structure to receive substantially flat articles, said pocket structure including sides, a support located between said sides, a plurality of linkage members pivoted to said support and to said sides respectively to form a parallelogram linkage, a synchronizing link connected to said linkage members intermediate the ends thereof, and resilient means reacting on said synchronizing link in a manner to yieldingly oppose the movement of said linkage and said support in a downward and outward direction due to said parallelogram linkage.

5. The subject matter of claim 5 wherein said pocket structure constitutes a portion of a sorting machine that has a side, and the outward component of motion of said support projecting a part of said support outwardly from said side to provide a visual indication that articles are located on said support.

6. The subject matter of claim 6 wherein said means include a spring having a spring rate such that said support moves downwardly a distance substantially in proportion to the weight of the articles thereby requiring said distance to remain substantially constant to at least contribute to the prevention of the articles from turning over as they enter and move into said pocket structure.

7. In a pocket structure, a receptacle having an open front, a support disposed in said receptacle and movable between an elevated position and a lowered position at which the front part of said support projects outwardly through said open front, a first and a second link, the upper ends of said links pivoted to said support and the lower ends of said links pivoted to said receptacle to form

a parallel linkage which constrains the movement of said support, a third link spaced from said first and second links and pivoted at its upper end to said support, a synchronizing link pivoted to said first and second links intermediate their ends and pivoted to the lower end of said third link to thereby require the said first and second and third links to operate in unison and to remain in parallelogram configuration in all positions of said support movement, and a spring connected to said synchonizing link and to said receptacle to yieldingly oppose the movement of said support in one direction.

8. The subject matter of claim 7 wherein said spring is connected to said receptacle above said synchronizing link to occupy a position behind the rear edge of said support when the front part of said support projects outwardly through said open front of the receptacle thereby enabling said support to be fully depressed to a lowermost position within said receptacle.

References Cited by the Examiner

UNITED STATES PATENTS

436,052	9/90	Deming	312—61
765,146	7/04	Mitchell	177—230
2,732,675	1/56	Smith et al.	56—25.4 X
2,860,690	11/58	Small	248—240.4 X
2,901,089	8/59	Rabinow et al.	209—74 X
2,938,631	5/60	Brey	248—284 X
3,091,503	5/63	Fisher	312—71

LEYLAND M. MARTIN, *Primary Examiner.*

LEO SMILOW, *Examiner.*