G. J. KELLEY.

ATOMIZER.

APPLICATION FILED FEB. 19, 1913.

1,090,863. Patented Mar. 24, 1914.

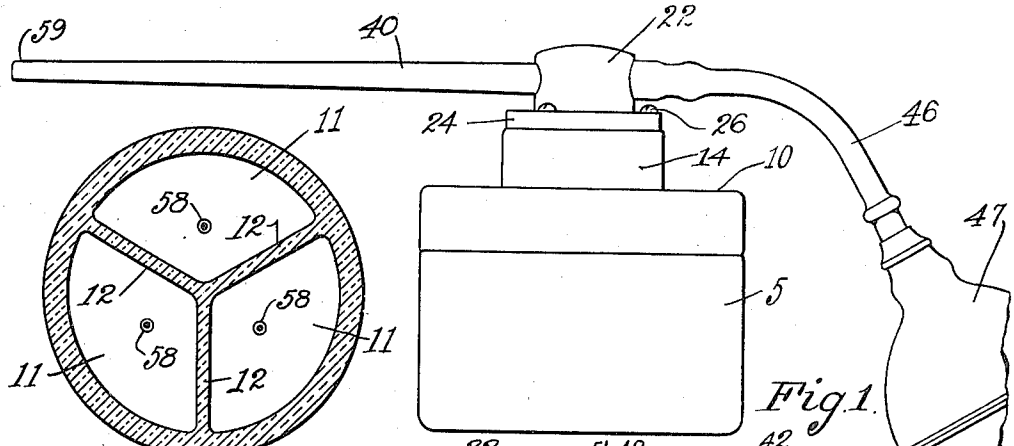

Fig. 1.

Fig. 4.

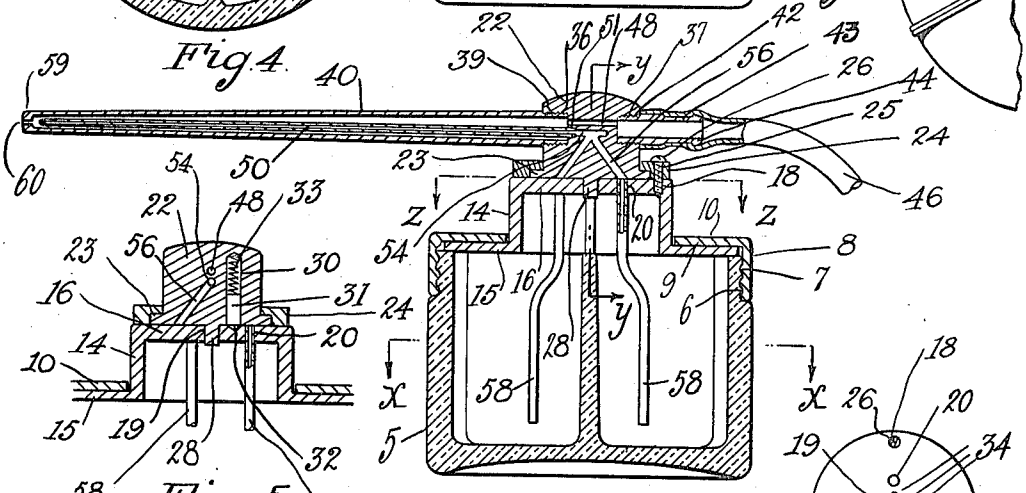

Fig. 2.

Fig. 5.

Fig. 6.

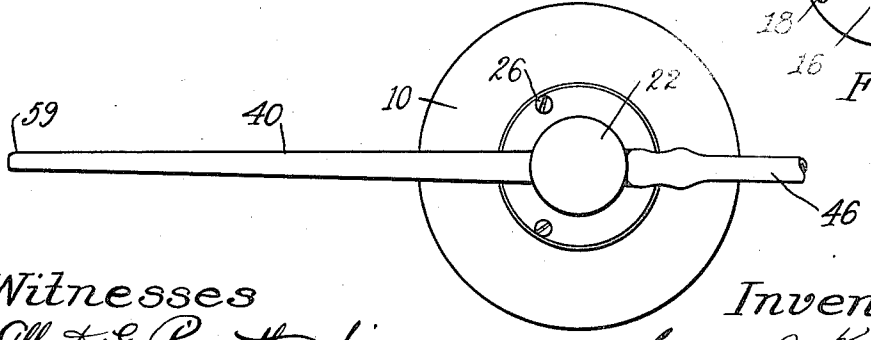

Fig. 3.

Witnesses

Albert G. Piezenthowski.

Marguerite H. Livesey

Inventor.

George J. Kelley

by Horatio E. Bracken

Attorney.

UNITED STATES PATENT OFFICE.

GEORGE J. KELLEY, OF ATTLEBORO, MASSACHUSETTS.

ATOMIZER.

1,090,863. Specification of Letters Patent. Patented Mar. 24, 1914.

Application filed February 19, 1913. Serial No. 749,375.

To all whom it may concern:

Be it known that I, GEORGE J. KELLEY, a citizen of the United States, residing at Attleboro, in the county of Bristol and State of Massachusetts, have invented certain new and useful Improvements in Atomizers, of which the following is a specification.

My invention relates to atomizers, and its essential objects are to secure in a single structure means for drawing upon a plurality of sources of liquid supply without the necessity of removing the spray producing device to independent bottles when a different character of contents is desired to be used; to reduce to a minimum the number of parts necessary to effect the desired end; and to attain these ends in a simple, inexpensive, and easily operated structure.

To the above ends essentially my invention consists in the features of construction, combinations of elements, and arrangement of parts which will be exemplified in the construction hereinafter set forth; and the scope of the application of which will be indicated in the appended claims.

In the accompanying drawings which form a part of this specification, and wherein like reference characters indicate like parts throughout the views;—Figure 1 is a side elevation of my novel atomizer, Fig. 2, a longitudinal central section of the same, showing parts in side elevation, Fig. 3, a plan of the same, Fig. 4, a section on line *x x* of Fig. 2, Fig. 5, a partial section on line *y y* of Fig. 2, and Fig. 6, a section on line *z z* of Fig. 2.

My structure comprises a bottle or flask 5 provided near its upper portion with threads 6 engaging threads 7 upon the depending flanged portion 8 of a horizontal disk 9 which together with the flange constitutes a retaining cover 10. The flask or bottle 5 is divided into a plurality of compartments 11, in the present instance three, by vertical partitions 12 radiating from the center of the flask. It will be understood that two or more compartments may be employed according to preference. A closed cap is provided comprising a central elevated hollow body portion 14, having upon its lower extremity a laterally extending flange portion 15 resting upon the upper edges of the flask 5 and partitions 12, and overlapped by the horizontal portion 9 of the cover 10 which clamps the portion 15 into contact with the flask, or upon an intermediate packing if desired, by virtue of the threads 6 and 7. The closed top 16 of the cap 14 is provided in its margin with a plurality of threaded perforations 18 adapted to receive securing screws; and with a central opening 19; and with a plurality of circularly arranged holes or openings 20, in the present instance three in number, located equidistant from each other, and intermediate to the central hole 19 and the margin of the cap top 16. It will be understood that the number of openings 20 is determined by the number of compartments 11 and are located in such positions as to most conveniently communicate with their respective compartments.

The cap 14 constitutes practically a part of the cover 10 and if preferred the cap may be made integral with the cover 10. Upon the cap 14 is swiveled a cylindrical block 22 which performs the functions of a valve, and a support for the discharge nozzle and air pipe. The block 22 is preferably of metal and in the present instance has upon its lower end an annular shoulder 23 over which extends a retaining ring 24 provided with threaded openings 25 adapted to receive screws 26 whose ends register in the perforations 18 of the cap, and by means of which the retaining ring 24 is held in contact with the face of the cap. The ring, however, is so loose upon the upper face of the shoulder 23 as not to interfere with facile rotary movement of the block 22 which is provided with a central depending pivot or pin or projection 28 which rests loosely in the opening 19 of the cap and forms a swiveling center for the block. The pivot, however, is not essential.

In order to temporarily retain the block in any radial adjusted position the following device is employed in the present instance. The block is provided with a vertical cavity 30 extending to its lower face in which is slidably mounted a spring pin 31 provided with a pointed lower end 32, and downwardly pressed by a helical spring 33 located in the cavity above the pin. This pin is adapted to register in one of the plurality of circularly arranged cavities 34, in the present instance three, located in the upper face of the portion 16 of the cap 14. In diametrically opposite portions of the block 22 are threaded openings 36 and 37 respectively, one of these openings being adapted to receive the flat inner end 39 of an air tube 40; while the second opening 37 is adapted

to receive the threaded end 42 of a pipe 43 provided with irregular outer ends 44 adapted to retain upon its exterior by friction the usual flexible pipe 46 connected at its outer end with the usual air bulb 47. The block is provided with a diametrically disposed passage 48 extending from the pipe 43 to the air tube 40. A fluid tube or discharge tube 50 within the air tube 40, and extending longitudinally thereof nearly to the end, is fixed by threads 51 upon its inner end or otherwise in a horizontal passage or cavity 54 in the block 22. The passage or opening 54 extends some distance into the block and has converging therein three inclined downwardly extending passages 56 extending to the lower face of the block 22. The openings of these passages on the face of the block 22 are circularly arranged at the same distance from the center of the block as are the holes 20 from the hole 19 of the cap 14, and are different in arcuate position from the positions of the openings 20, so that when one of the passages 56 registers with one of the passages 20 the remainder of the passages in the block do not register with the remainder of the holes in the member 14. Fixed in the openings 20 by friction or otherwise are downwardly projecting tubes 58 extending into the several compartments 11 of the receptacle.

The particular construction of the discharge member or members 40 and 50 is not of essence to the present invention. As shown the free end 59 of the discharge tube 40 is contracted and provided with a discharge opening 60 through which passes the air from the tube 40 past the end of the fluid tube 50 whereby the atomizing discharge is effected.

In operating the device the block 22 is swung into whatever radial position is necessary for one of the passages 56 to register with that one of the tubes 58 which is in the particular compartment 11 that it is sought to empty, the spring pin 31 registering in such one of the cavities 34 as corresponds with the particular tube to be operated through, and the parts are then temporarily maintained in the adjusted position. By the compression and release of the bulb 47 the liquid is raised from the compartment 11 through the tube 58 and registering passage 56 to the passage 54 and tube 50, or immediately into the tube 50 if the tube is inserted the full length of the passage 54, and the air which performs the necessary siphoning functions passes through the tube 46, passage 48, and tube 40 as already suggested.

It will be understood that the number of passages 56 in the valve member may be one or more, and the number of compartments 11 may be varied in number. While in the present instance no more than one of the passages 56 is described as at the same time registering with any one of the tubes 58, it will be understood that two or more of said passages may be arranged to simultaneously register with a corresponding number of the tubes, whereby the contents of two compartments may be simultaneously operated upon.

The spring pin 31 or other checking or locking device may be omitted without departing from the spirit of my invention, but in such case it is desirable that the valve member have a greater frictional contact with the closure member than when a checking device is employed.

What I claim is:—

1. In an atomizer, the combination of a receptacle provided with a plurality of compartments, a closure upon the receptacle, supply tubes annularly arranged in the closure and extending into the compartments, a valve member provided with a flat face in contact with the closure and rotatably mounted thereon, and a discharge tube held in the valve member, said valve member being provided with annularly arranged passages communicating with the discharge tube and extending to the contacting face of the valve member at points corresponding to the radial distances of the supply tubes but at non corresponding arcuate distances.

2. In an atomizer, the combination of a receptacle provided with a plurality of compartments, a closure upon the receptacle provided with a series of cavities in its upper face, a valve member rotatably mounted upon the closure with its operating face in contact with the closure and provided with a cavity, a locking pin in the cavity adapted to register in the cavities of the closure when the valve member is rotated, a discharge tube in the valve member, said valve member being provided with passages extending from the discharge tube to the operating face of the valve member and supply tubes carried by said closures, said cavities and said supply tubes being so arranged with relation to the passages in the valve member that in each locking position of the valve member a single passage and supply tube are in communication with each other.

In testimony whereof I have affixed my signature in presence of two witnesses.

GEORGE J. KELLEY.

Witnesses:
HORATIO E. BELLOWS,
FRED W. PERKINS.