Jan. 10, 1928.

1,655,999

G. W. HENRY, JR

TAG PRINTING MACHINE

Filed March 5, 1926

5 Sheets-Sheet 1

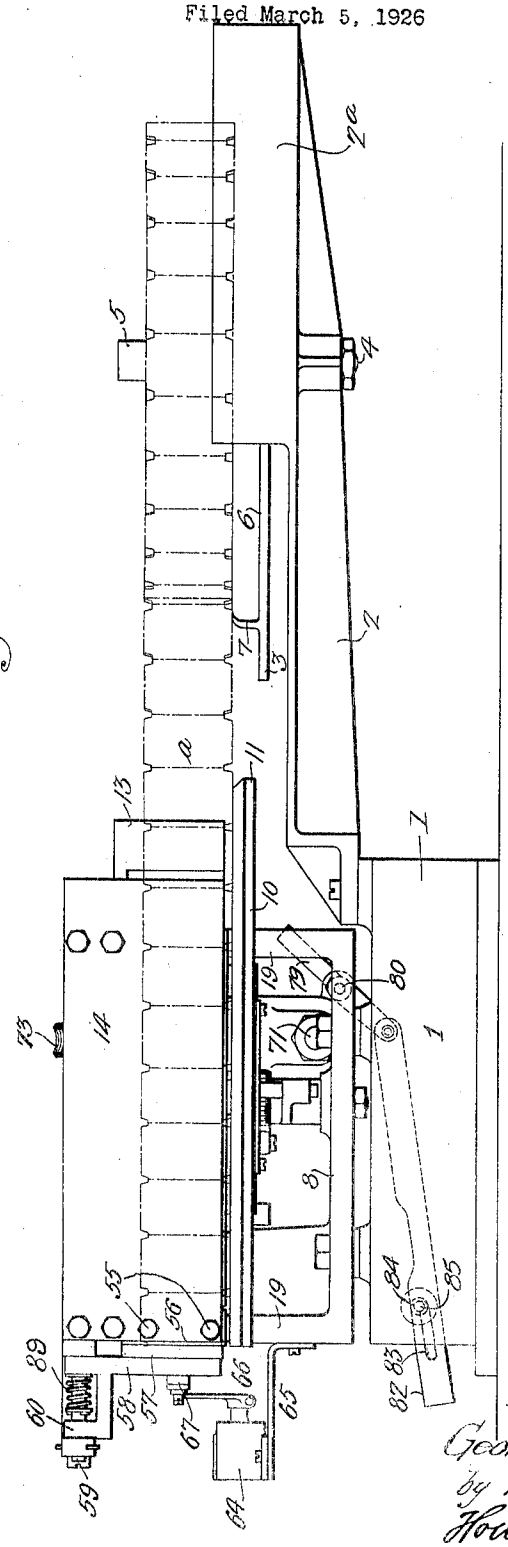

Fig. 1.

Inventor:
George W. Henry Jr.
by his Attorneys
Howson & Howson

Jan. 10, 1928.

1,655,999

G. W. HENRY, JR

TAG PRINTING MACHINE

Filed March 5, 1926

5 Sheets-Sheet 2

Fig. 2.

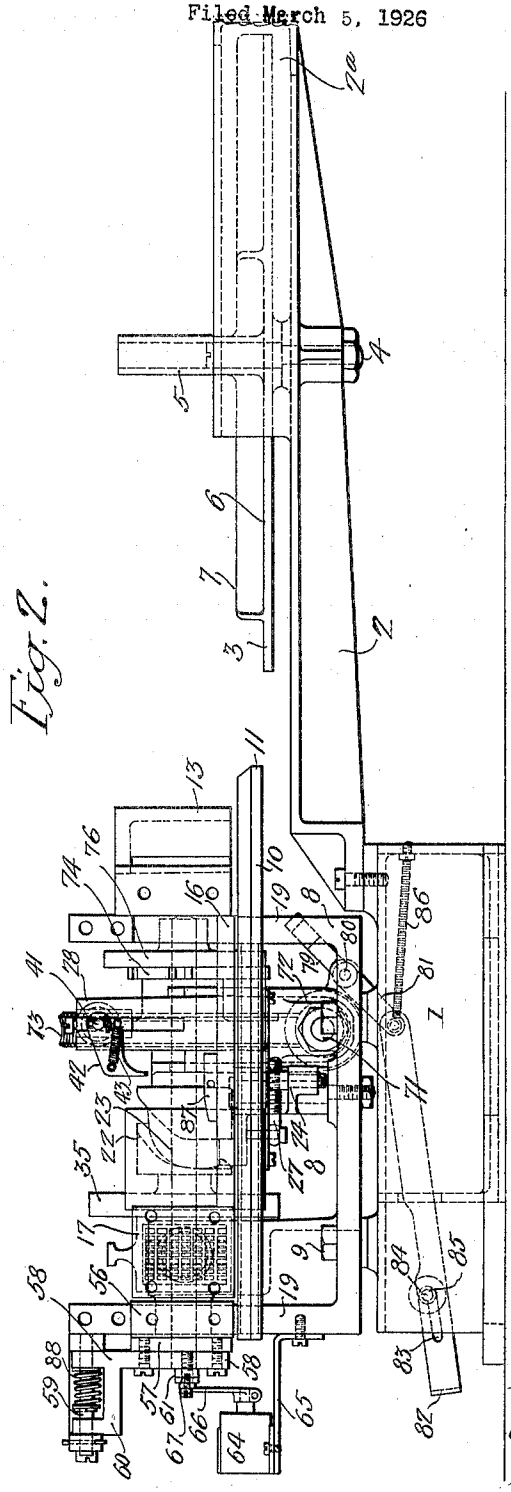

Inventor:
George W. Henry Jr.,
by his Attorneys,
Howson & Howson

Jan. 10, 1928.

1,655,999

G. W. HENRY, JR

TAG PRINTING MACHINE

Filed March 5, 1926

5 Sheets-Sheet 3

Fig. 3.

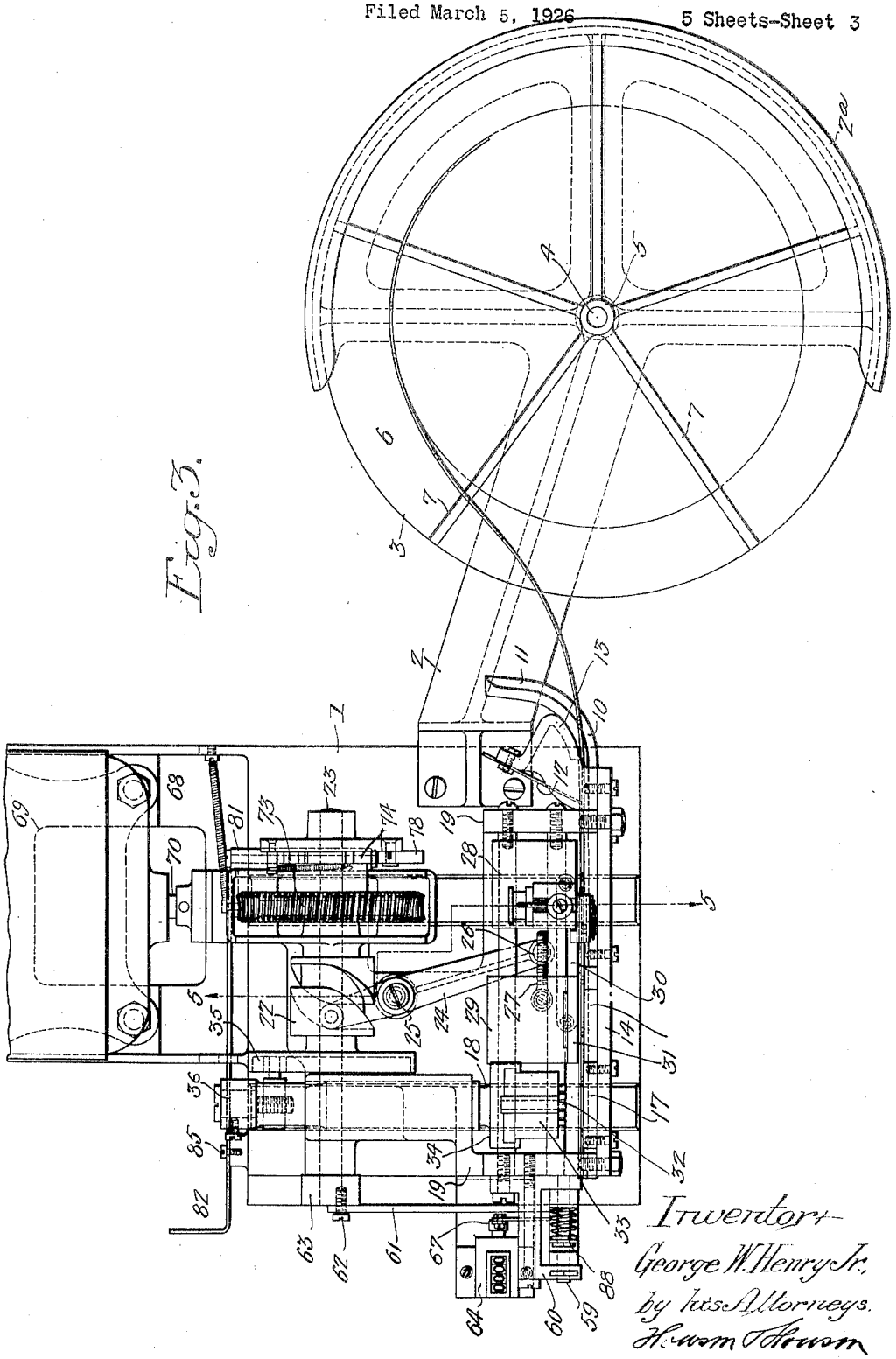

Inventor-
George W. Henry Jr.
by Iris Attorneys.
Howson & Howson

Jan. 10, 1928. 1,655,999

G. W. HENRY, JR

TAG PRINTING MACHINE

Filed March 5, 1926 5 Sheets-Sheet 4

Fig. 10.

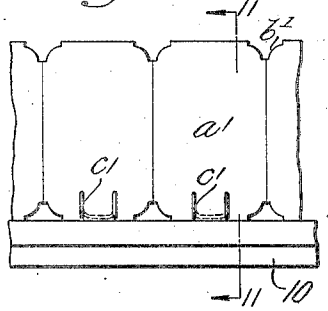

Fig. 11.

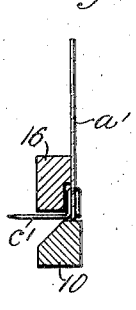

Fig. 8.

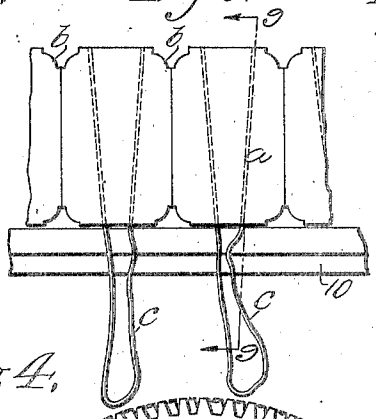

Fig. 9.

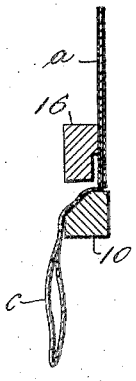

Fig. 4.

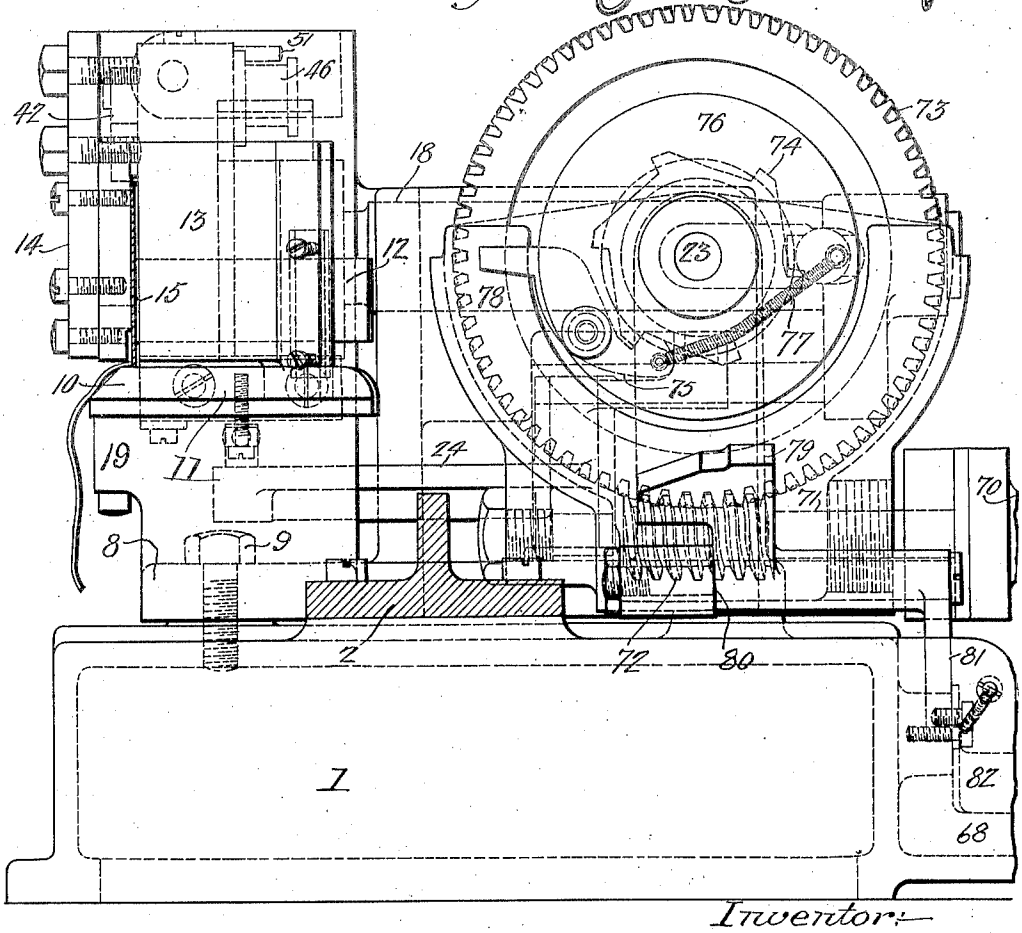

Inventor:
George W. Henry Jr.,
by his Attorneys,
Howson & Howson

Jan. 10, 1928.

1,655,999

G. W. HENRY, JR.

TAG PRINTING MACHINE

Filed March 5, 1926

5 Sheets-Sheet 5

Fig. 7.

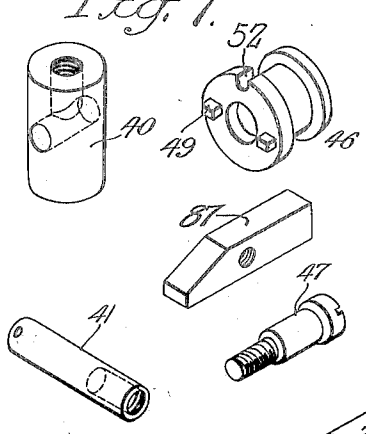

Fig. 6.

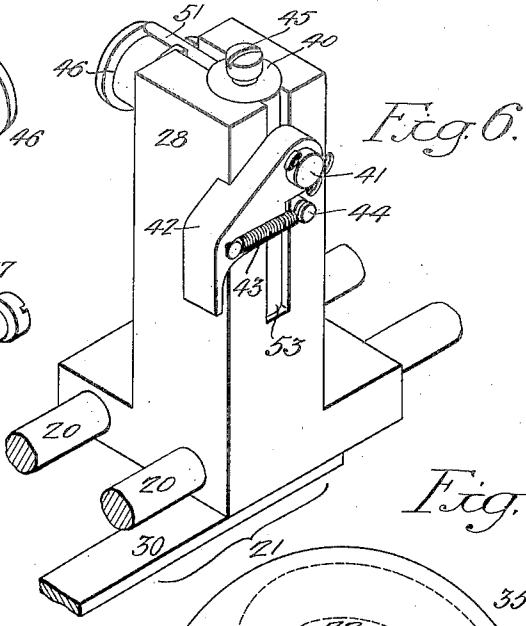

Fig. 5.

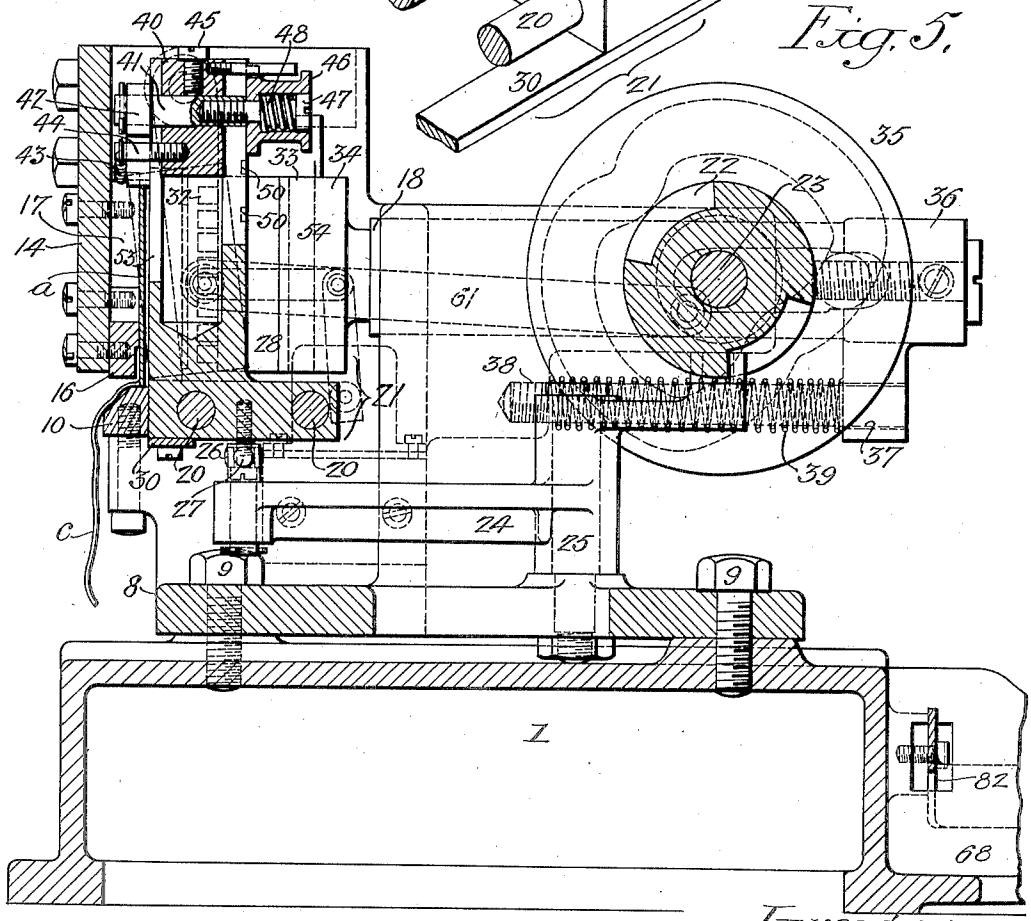

Inventor:
George W. Henry, Jr.,
by his Attorneys,
Howson & Howson

Patented Jan. 10, 1928. 1,655,999

UNITED STATES PATENT OFFICE.

GEORGE W. HENRY, JR., OF PHILADELPHIA, PENNSYLVANIA, ASSIGNOR TO SOABAR COMPANY, OF PHILADELPHIA, PENNSYLVANIA, A CORPORATION OF PENNSYLVANIA.

TAG-PRINTING MACHINE.

Application filed March 5, 1926. Serial No. 92,496.

My invention relates to certain improvements in machines for printing and cutting tags.

One object of my invention is to design a machine for printing tags as they are fed to the machine from a coiled strip having either strings attached or provided with attaching staples.

A further object of the invention is to feed the strips on edge to the printing mechanism and to the means for severing the individual printed tags from the strips, allowing the strings or staples to freely pass through the machine.

In the accompanying drawings:

Fig. 1 is a side view of my improved machine for printing tags;

Fig. 2 is a view similar to Fig. 1, with the front plate removed to show the feeding and printing mechanism;

Fig. 3 is a plan view;

Fig. 4 is an end view;

Fig. 5 is a transverse sectional view on the line 5—5, Fig. 3;

Fig. 6 is a detached perspective view of the feeding device;

Fig. 7 is a perspective view showing parts of the feeding mechanism detached;

Fig. 8 is a detached front elevation showing a string tag strip on the rail.

Fig. 9 is a sectional view on the line 9—9, Fig. 8;

Fig. 10 is a detached front elevation showing a staple tag on the rail; and

Fig. 11 is a sectional view on the line 11—11, Fig. 10.

The mechanism is mounted on a base 1, to which is attached an arm 2 carrying a reel 3 which is mounted on a pivot pin 4. This reel has a hub 5, and a base 6 on which are radial ribs 7 which support the coil of tags, as clearly shown in Fig. 1. The arm has a segmental guard flange 2^a, as shown in Fig. 3. The frame 8 of the machine is secured to the base by a bolt 9.

Secured to uprights 19 on the frame 8 is a rail 10, on which the tags travel on edge. The feed end of the rail is curved as at 11 for the passage of the tag strip. A detent 12, consisting of a flat plate set at an angle, rests on the tags and prevents any rearward movement of the tag strip. The plate is clamped to a bracket 13 secured to a front plate 14 which is located above the rail 10. The bracket 13 is slotted at 15 for the passage of the tag strips. The slot is open at the bottom to allow the strings or staple of the tag strip to pass out between the rail 10 and front plate 14 (see Fig. 4).

Secured to the front plate 14 is a guide strip 16 for the tag, and a platen 17 which is located opposite the printing plunger 18. Extending from one upright member 19 to the other upright member 19 of the frame 8 are two round rails 20—20, on which is mounted a carriage 21. This carriage is reciprocated by a cam 22 on a driven shaft 23 by a lever 24 pivoted to the frame 8 at 25. On one end of the lever 24 is a swivel head 26, through which extends an adjusting screw 27 mounted on the underside of the carriage 21. On adjusting this screw, the carriage can be properly timed with the other mechanism of the machine.

The carriage 21 consists of two members, a pawl post 28 for feeding the tag strip, and an inking pad carrier 29. These parts are connected by a plate 30. The pad may be made in any suitable manner to hold the ink which is applied to the type 32 secured in the chase 33, which is removably mounted in the undercut head 34 of the plunger 18. The carriage moves the inking pad in position in front of the chase, so that as the plunger moves forward the type comes in contact with the pad and receives the ink. The plunger is then retracted by its cam 35 and is moved forward after the pad has been withdrawn, printing the tag that has been fed over the platen. The cam 35 is secured to the cam-shaft 23.

On the inner end of the plunger 18 is a collar 36 having a pin 37, and on the frame is a pin 38. A coiled spring 39 is located on the two pins 37 and 38 and places tension on the plunger. The pawl post is made as shown in Figs. 5 and 6.

In the post 28 is a vertical opening in which a block 40 is mounted. The block can be vertically adjusted in the opening to accommodate tags of different sizes. A pin 41 extends through the block 40 and carries a blunt pawl 42. A spring 43 is attached to the pawl and to a post 44 on the block,

tending to yieldingly hold the pawl in engagement with the tag strip *a*. The pin 41 is held by a set screw 45. By making the pawl blunt as shown, it will not cut or mar the edge of the tag strip.

In order to retain the block in position after adjustment, a collar 46 is mounted on a screw 47 adapted to a threaded opening in one end of the pin 41, and between the head of the screw and an internal flange on the collar is a coiled spring 48. On one face of the collar are lugs 49 which enter notches 50 in the post 28. A pin 51 projects from the upper end of the block 40 into a notch 52 in the collar, preventing the collar turning on its screw 47, but allowing the collar to be withdrawn against the pressure of the spring 48, to withdraw the lugs from their notches 50 so that the block with its pawl can be adjusted vertically to accommodate tag strips of different sizes. The post 28 is slotted at 53 and 54 on each side of the vertical opening for the pin 41.

The pawl is so shaped as to enter the notches *b* in the tag strip *a*, so that as the carriage moves forward the pawl feeds the strip forward the width of one tag.

Secured by bolts 55 to the front plate 14 is the fixed blade 56 of the tag cutter. The movable blade 57 is attached to an arm 58 pivotally mounted on a pin 59 carried by a bracket 60 secured to one of the upright members 19 of the frame 8. The arm 58 is connected by a rod 61 to a pin 62 on a crank 63 at the end of the shaft 23. As the shaft rotates, the movable blade moves over the fixed blade and makes a shear cut, severing a tag from the strip. A spring 88 on the pin 59 bears against the arm 58 and presses the movable blade towards the fixed blade of the cutter. In the present instance, a counter 64 is used. This counter is mounted on a bracket 65. The arm 66 of the counter is connected to the arm 58 of the cutter by a rod 67.

The mechanism is preferably driven by an electric motor. Projecting rearwardly from the base is a support 68 for the motor 69. The shaft 70 of the motor is coupled to the shaft 71 of a worm 72 which meshes with a worm-wheel 73 loose on the cam-shaft 23. Secured to the worm-wheel is a ratchet-wheel 74, with which engages a pawl 75 pivotally mounted on a disk 76 secured to the shaft 23. A spring 77 tends to hold the pawl yieldingly in engagement with the ratchet-wheel. On the pawl is an arm 78, which is arranged to engage a stop 79 when said stop is moved into the path of the arm. The stop is pivoted at 80 to the frame 8, and on the stop is an arm 81, connected to a shifter 82, having a slot 83 and a notch 84. A pin 85 extends through the slot. The operator can move the shifter so that the stop will be in the path of the arm. The shifter is held in this position as the pin 85 is in the notch 84, and the machine will feed and print tags continuously until the operator shifts the stop. As soon as the operator releases the shifter, a spring 86 moves the stop into the path of the arm of the pawl, and the driven shaft 23 is released from the driving gear.

The machine can be used in printing and cutting string tags or pin tags from long coiled strips which are fed automatically from the coil to and through the machine, the strings and pins projecting through the space between the rail and the guide strip 16.

In each of Figs. 8 and 9 a string tag strip *a* is shown, the strings *c* being looped in the present instance and extending between two plies of paper of which the tag is made.

In each of Figs. 10 and 11 a pin tag *a'* is shown, the pins C' being U-shaped and bent as shown. The prongs of the pins project at right angles to the face of the tag, the space between the rail 10 and the guide strip 16 being sufficient to allow for the passage of the pins.

As the strip is fed from the reel, it passes the detent plate, and is engaged by the pawl 42 which enters one of the notches *b* in the tag strip *a*. The pawl feeds the strip the width of one tag on the forward movement of the carriage, bringing a section of the strip in front of the printing plunger. The strip remains in this position while the plunger moves forward, the type being brought in contact with the inking pad, and as the carriage returns, the plunger moves forward again to make the impression on a section of the tag strip. As the pawl moves forward again, it projects the printed section over the fixed cutter, and as the movement of the cam-shaft continues, the movable cutter severs the printed tag section from the strip.

In order to feed tickets of a width less than the standard width of the large ticket, I provide a cam 87, Fig. 2, which can be raised and located directly under the feeding pawl 42, so that the pawl will ride upon the cam and out of engagement with the ticket strip and past a feeding notch, which would otherwise feed two tickets at a time, the pawl dropping from the cam into engagement with the ticket, and feeding the narrow ticket strip the necessary distance. The width of the ticket can be varied to a certain extent.

I claim:—

1. The combination in a tag printing machine, of a rail on which tag strips travel on edge; a guide spaced from the upper surface of the rail to allow the fastening means for the tag to project therethrough; feeding mechanism; and printing mechanism, said printing mechanism making an impression on a section of the strip after it has been fed

the width of a tag and while the tag strip is in a vertical position.

2. The combination in a tag printing machine, of a rail on which the tag strip travels on edge; a guide spaced from the rail to allow the fastening means for the tag to project therethrough; feeding mechanism; printing mechanism, said printing mechanism making an impression on a section of the strip after it has been fed the width of a tag and while in a vertical position; and a cutter located beyond the printing mechanism for severing the printed section from the tag strip.

3. The combination in a machine for printing tags, of a base; a bracket; a reel forming a support for a coil of tags mounted on the bracket; a rail over which the tags travel on edge; a detent to prevent reverse movement of the tags; a reciprocating feeding device having a pawl engaging the tag strip; printing mechanism for printing a section of the tag strip while on edge; and means for severing the tag strip after it passes the printing mechanism.

4. The combination in a tag printing machine, of a reel upon which a coiled tag strip is located; a guide for the strip; a rail upon which the strip passes through the machine on edge; a guard spaced from the upper edge rail to allow the fastening means to project therethrough; a carriage; means for reciprocating the carriage; an inking pad on the carriage; a printing plunger; and cam mechanism for actuating the printing plunger, so that on reciprocation of the carriage the plunger will first move forward to allow the type strip carried by the plunger to be inked by the pad, and then under retraction of the carriage the plunger will move a second time to make an impression on a section of the tag while the tag strip is at rest.

5. The combination in a tag printing machine, of a reel upon which a coiled tag strip is mounted; a rail over which the tag strip is fed on end; a guard spaced from the rail, allowing the fastening means to project through the space; a reciprocating carriage; a pawl mounted on the carriage, said pawl being vertically adjustable to fit tags of different sizes; an inking pad on the carriage; a fixed platen; a reciprocating plunger carrying type, the mechanism being so timed that on the forward movement of the carriage the pawl will engage and feed the tag strip, and the inking pad will be moved into the path of the plunger which is moved forward to ink the type, and on the return of the carriage and while the tag strip is at rest the type plunger will make a second movement, making an impression on a section of the tag strip; a cam shaft; and cams on the shaft for actuating the carriage and reciprocating the plunger.

6. The combination in a tag printing machine of a reel upon which a tag strip is mounted; means for guiding the strip through the machine on end; means for feeding the strip; means for printing the strip; a fixed blade of a cutter and a pivoted movable blade; a cam-shaft for operating the feeding and printing mechanisms; and a crank on the cam-shaft connected to the arm carrying the movable cutter, the mechanism being so timed that when a tag section is projected from the machine it will be severed from the strip by the cutters.

7. The combination in a tag printing machine, of means for feeding a tag strip on edge through the machine, said tags trip having notches in its upper edge; a carriage having a pawl post; a vertically adjustable block in the post; means for locking the block in the position to which it is adjusted; a pawl carried by the block and arranged to engage the notches in the tag strip; and printing mechanism for printing a section of the tag strip when said strip is at rest.

8. The combination of a reel for holding a tag strip in the form of a coil, said strip having securing means for the tags attached thereto; a rail on which the tag strip is fed through the machine on edge, said rail being curved at the feed end of the machine; a detent plate bearing against the face of the tag strip; a carriage having a pawl post; an inking pad; means for reciprocating the carriage; a vertically adjustable pawl mounted on the post; and means for locking the pawl in its adjustable position, the strip being notched at its upper edge to receive the pawl; a printing plunger carrying type; and a fixed platen opposite the printing plunger, the plunger being so timed in respect to the carriage that the type will be inked on the first reciprocation of the plunger, and on the return of the carriage will make an impression upon that portion of the tag strip located in front of the platen.

9. The combination in a strip printing machine, of a rail upon which the tags are fed through the machine on edge; a carriage having a pawl-post, said post having a vertical opening therein; a block adjustably mounted in the opening; a pivot pin in the block; a pawl mounted on the pivot pin; a screw engaging the pin; and a spring-pressed sleeve mounted on the screw and having lugs on its face, said pawl-post having notches to receive the lugs, so that the pawl can be vertically adjusted to accommodate different sized tags, the sleeve retaining the pawl in the position in which it is adjusted.

10. The combination in a tag printing machine, of a base; a bracket secured to the base; a reel mounted on the bracket and on which the coiled tag strip is located, said bracket having a segmental flange extending above the reel; a frame; two parallel horizontal rails on the frame; a carriage

mounted on the frame, said carriage consisting of a pawl-post and an inking pad carrier; a bar connecting the two elements; a cam-shaft; a cam on the shaft; a lever engaging the cam and connected to the carriage; a type plunger; a fixed platen in front of the plunger; a cam for operating the plunger; a fixed cutting blade on the frame; a pivoted arm carrying a movable cutting blade; and a crank on the cam-shaft connected to the cutter and so timed with the printing mechanism that as the printed strip section is projected it will be severed by the cutter.

11. The combination in a tag printing machine, of a printing mechanism; a feeding mechanism having a pawl which engages the edges of the tag strip; and a cam in a fixed position in respect to the pawl which will hold the pawl out of engagement with the strip during a portion of its travel, so that the strip having narrow tags will only be fed one tag section at a time.

12. The combination in a tag printing machine, of a rail on which the tag is fed on edge; printing mechanism; and feeding mechanism including a pawl for engaging the upper edge of a tag strip, said pawl having a blunt end arranged to enter a corresponding notch in the edge of the tag strip.

GEORGE W. HENRY, JR.