(12) INTERNATIONAL APPLICATION PUBLISHED UNDER THE PATENT COOPERATION TREATY (PCT)

(19) World Intellectual Property
Organization
International Bureau

(43) International Publication Date
18 June 2020 (18.06.2020)

WIPO | PCT

(10) International Publication Number
WO 2020/121170 A1

(51) International Patent Classification:
E21B 43/08 (2006.01) *B01D 29/46* (2006.01)

(21) International Application Number:
PCT/IB2019/060577

(22) International Filing Date:
09 December 2019 (09.12.2019)

(25) Filing Language: English

(26) Publication Language: English

(30) Priority Data:
18211359.7 10 December 2018 (10.12.2018) EP

(71) Applicant: 3M INNOVATIVE PROPERTIES COMPANY [US/US]; 3M Center, Post Office Box 33427, Saint Paul, Minnesota 55133-3427 (US).

(72) Inventors: MESCHKE, Frank; Carl-Schurz-Strasse 1, D-41453 Neuss (DE). **BARTH, Peter**; Carl-Schurz-Strasse 1, D-41453 Neuss (DE).

(74) Agent: SPIELBAUER, Thomas M., et al.; 3M Center, Office of Intellectual Property Counsel, Post Office Box 33427, Saint Paul, Minnesota 55133-3427 (US).

(81) Designated States *(unless otherwise indicated, for every kind of national protection available)*: AE, AG, AL, AM, AO, AT, AU, AZ, BA, BB, BG, BH, BN, BR, BW, BY, BZ, CA, CH, CL, CN, CO, CR, CU, CZ, DE, DJ, DK, DM, DO, DZ, EC, EE, EG, ES, FI, GB, GD, GE, GH, GM, GT, HN, HR, HU, ID, IL, IN, IR, IS, JO, JP, KE, KG, KH, KN, KP, KR, KW, KZ, LA, LC, LK, LR, LS, LU, LY, MA, MD, ME, MG, MK, MN, MW, MX, MY, MZ, NA, NG, NI, NO, NZ, OM, PA, PE, PG, PH, PL, PT, QA, RO, RS, RU, RW, SA, SC, SD, SE, SG, SK, SL, SM, ST, SV, SY, TH, TJ, TM, TN, TR, TT, TZ, UA, UG, US, UZ, VC, VN, ZA, ZM, ZW.

(84) Designated States *(unless otherwise indicated, for every kind of regional protection available)*: ARIPO (BW, GH, GM, KE, LR, LS, MW, MZ, NA, RW, SD, SL, ST, SZ, TZ, UG, ZM, ZW), Eurasian (AM, AZ, BY, KG, KZ, RU, TJ, TM), European (AL, AT, BE, BG, CH, CY, CZ, DE, DK, EE, ES, FI, FR, GB, GR, HR, HU, IE, IS, IT, LT, LU, LV, MC, MK, MT, NL, NO, PL, PT, RO, RS, SE, SI, SK, SM, TR), OAPI (BF, BJ, CF, CG, CI, CM, GA, GN, GQ, GW, KM, ML, MR, NE, SN, TD, TG).

Published:
— *with international search report (Art. 21(3))*
— *in black and white; the international application as filed contained color or greyscale and is available for download from PATENTSCOPE*

(54) Title: SEPARATING DEVICE AND USE OF A SEPARATING DEVICE

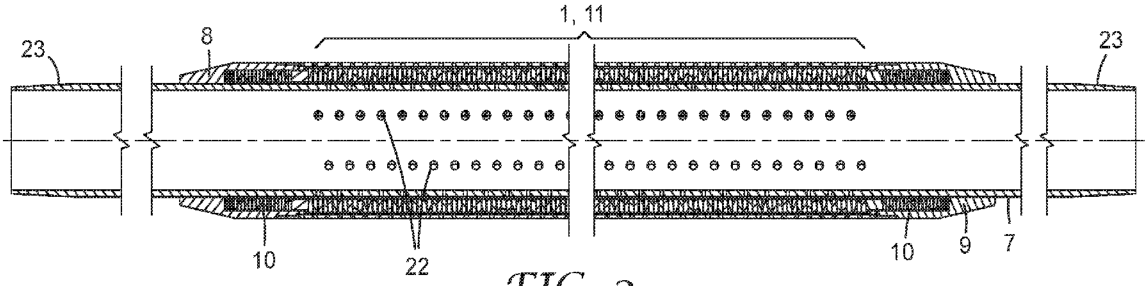

FIG. 2

(57) Abstract: The present disclosure relates to a separating device for removing solid particles from fluids having an improved resistance to mechanical shocks, and to the use of said separating device for removing solid particles from fluids.

WO 2020/121170 A1

SEPARATING DEVICE AND USE OF A SEPARATING DEVICE

Technical Field

The present disclosure relates to a separating device for the removal of solid particles from a fluid.

Background

Such separating devices are required in many oil and gas extraction wells. Mineral oil and natural gas are stored in naturally occurring underground reservoirs, the oil or gas being distributed in more or less porous and permeable mineral layers. The aim of every oil or gas drill hole is to reach the reservoir and exploit it in such a way that, as far as possible, only saleable products such as oil and gas are extracted, while undesired by-products are minimized or even avoided completely. The undesired by-products in oil and gas extraction include solid particles such as sands and other mineral particles that are entrained from the reservoir up to the borehole by the liquid or gas flow.

Since the mineral sands are often abrasive, the influx of such solids into the production tubing and pump cause considerable undesired abrasive and erosive wear on all of the technical internals of the borehole. It is therefore endeavoured to free the production flow of undesired sands directly after it leaves the reservoir, that is to say while it is still in the borehole, by filter systems.

Problems of abrasion and erosion in the removal of solid particles from liquid and gas flows are not confined to the oil and gas industry, but may also occur in the extraction of water. Water may be extracted for the purpose of obtaining drinking water or else for the obtainment of geothermal energy. The porous, often loosely layered reservoirs of water have the tendency to introduce a considerable amount of abrasive particles into the material that is extracted. In these applications too, there is the need for abrasion- and erosion-resistant filters. Also in the extraction of ore and many other minerals, there are problems of abrasion and erosion in the removal of solid particles from liquid and gas flows.

In oil and gas extraction, the separation of undesired particles is usually achieved today by using filters that are produced by spirally winding and welding steel forming wires onto a perforated basepipe. Such filters are referred to as "wire wrap filters". Another commonly used type of construction for filters in oil and gas extraction is that of wrapping a perforated basepipe with metal screening meshes. These filters are referred to as "metal mesh screens". Both methods provide filters with effective screen apertures of 75 μm to 350 μm. Depending on the type of construction and the planned intended use of both these types of filter, the filtering elements are additionally protected from mechanical damage during transport and introduction into the borehole by an externally fitted, coarse-mesh cage. The disadvantage of these types of filter is that, under the effect of the abrasive particles flowing at high speed, metal structures are subject to rapid abrasive wear, which quickly leads to destruction of the filigree screen structures. Such high-speed abrasive flows often occur in oil and/or gas extraction wells, which leads to considerable technical and financial maintenance expenditure involved in changing the filters. There are even extraction wells which, for reasons of these flows, cannot be controlled by the conventional filtering technique, and therefore cannot be commercially exploited. Conventional metallic filters are subject to abrasive and erosive wear, since steels, even if they are hardened, are softer than the particles in the extraction wells, which sometimes contain quartz.

In order to counter the abrasive flows of sand with abrasion-resistant screen structures, US 8,893,781 B2, US 8,833,447 B2, US 8,662,167 B2 and WO 2016/018821 A1 propose filter structures in which the filter gaps, that is to say the functional openings of the filter, are created by stacking specially formed densely sintered annular discs of a brittle-hard material, preferably of a ceramic material. In this case, spacers are arranged on the upper side of annular discs, distributed over the circumference of the discs.

During the installation procedure of the screen into the borehole, i.e. during insertion of the screen, running downhole through narrow passages and setting to the final position, there is a risk of subjecting the screen to mechanical shocks which may cause damage of the annular discs made from the brittle-hard material. It has been observed that screens according to US 8,662,167 B2 and WO 2016/018821 A1 may show failure due to breaking of the ceramic rings after a fall from a height of for example 30 cm, or by a jarring procedure, during the installation procedure.

Therefore, there is still a need to provide an improved separating device for the removal of solid particles from fluids, in particular from oil, gas and water. Particularly, there is a need to provide a separating device having an improved resistance to mechanical shocks, specifically during the installation procedure of the separating device.

As used herein, "a", "an", "the", "at least one" and "one or more" are used interchangeably. The term “comprise” shall include also the terms “consist essentially of” and “consists of”.

Summary

In a first aspect, the present disclosure relates to a separating device for removing solid particles from fluids, comprising:

- a stack of at least three annular discs defining a central annular region along a central axis, each annular disc having an upper side and an underside, wherein the upper side of each annular disc each has one or more spacers, and wherein the one or more spacers of the upper side of each annular disc contact the underside of the adjacent annular disc defining a separating gap, and wherein each annular disc (2) comprises a material independently selected from the group consisting of (i) ceramic materials; (ii) mixed materials having fractions of ceramic or metallic hard materials and a metallic binding phase; and (iii) powder metallurgical materials with hard material phases formed in-situ,
- a perforated pipe, which is located inside the stack of at least three annular discs and on which the annular discs are stacked,
- an end cap at the upper end of the central annular region and an end cap at the lower end of the central annular region, and

- a shock absorber at the lower end and/or at the upper end of the central annular region for absorption of mechanical shock loads.

In another aspect, the present disclosure also relates to a separating device for removing solid particles from fluids, comprising:

- a stack of at least three annular discs defining a central annular region along a central axis, each annular disc having an upper side and an underside, wherein the upper side and the underside of every second annular disc in the stack each has one or more spacers, and wherein the upper side and the underside of the respectively adjacent annular discs do not comprise any spacers, and wherein the one or more spacers of the upper side of each annular disc contact the underside of the adjacent annular disc defining a separating gap, and wherein the one or more spacers (5) of the underside (15) of each annular disc (12) contact the upper side (16) of the adjacent annular disc (13) defining a separating gap (6), and wherein each annular disc (12, 13) comprises a material independently selected from the group consisting of (i) ceramic materials; (ii) mixed materials having fractions of ceramic or metallic hard materials and a metallic binding phase; and (iii) powder metallurgical materials with hard material phases formed in-situ, - a perforated pipe, which is located inside the stack of at least three annular discs and on which the annular discs are stacked,
- an end cap at the upper end of the central annular region and an end cap at the lower end of the central annular region, and
- a shock absorber at the lower end and/or at the upper end of the central annular region for absorption of mechanical shock loads.

In yet a further aspect, the present disclosure relates to the use of a separating device as disclosed herein for removing solid particles from fluids;

in a process for extracting fluids from extraction wells, or
in water or in storage installations for fluids, or
in a process for extracting ores and minerals.

The separating device as disclosed herein has an improved robustness during handling, such as during transport or during the installation procedure of the separating device, specifically an improved resistance to mechanical shocks.

In some embodiments, the separating device as disclosed herein can withstand reliably mechanical shocks corresponding to impact from a fall from a height of 100 mm without damage, with the separating device being oriented vertically. In some embodiments, the separating device as disclosed herein can withstand reliably mechanical shocks corresponding to impact from a fall from a height of up to 200 mm without damage, with the separating device being oriented vertically.

The shock absorber of the separating device as disclosed herein allows to absorb a high amount of energy from impact. The kinetic energy from the stack of annular discs is transferred slowly to the shock absorber and a hard stopping of the annular discs is avoided, thereby avoiding a rupture of the brittle-hard annular discs. In some embodiments, the amount of energy from impact is completely absorbed by the shock absorber of the separating device.

Brief description of the drawings

The present disclosure is explained in more detail on the basis of the drawings, in which,

Figure 1 schematically shows the overall view of a separating device as disclosed herein;

Figure 2 shows a cross-sectional view of a separating device as disclosed herein;

Figures 3A - 3L show various details of the stack of annular discs of an embodiment of a separating device as disclosed herein;

Figures 4A - 4L show various details of the stack of annular discs of a further embodiment of a separating device as disclosed herein;

Figures 5 shows a detail of the cross-sectional view of the separating device of Figure 2 including a shock absorber; and

Figures 6A - 6B show the shock absorber which is represented in Figure 5, before it is assembled on the separating device.

Detailed Description

Preferred embodiments and details of the separating device of the present disclosure are explained in more detail below with reference to the drawings.

Figure 1 shows the overall view of a separating device according to the present disclosure. Figure 2 shows a cross-sectional view of a separating device according to the present disclosure. The separating device according to the present disclosure comprises a stack of at least three annular discs defining a central annular region 1, 11 along a central axis. Preferably, the stack of at least three annular discs is a concentric stack. The separating device comprises a perforated pipe 7, on which the annular discs are stacked. The perforated pipe 7 with perforations 22 is located inside the stack 1, 11 of annular discs and is also referred to hereinafter as the base pipe. Usually provided at both ends of the perforated pipe 7 are threads 23, by way of which the separating device can be connected to further components, either to further separating devices or to further components of the extraction equipment. The separating device comprises an end cap 8 at the upper end of the central annular region and an end cap 9 at the lower end of the central annular region 1, 11, the end caps being firmly connected to the base pipe 7. The separating device may further comprise a tubular shroud 21 (see Figure 1) that can be freely passed through by a flow. The shroud 21 protects the central annular region from mechanical damage during handling and fitting into the borehole.

For better understanding, and since the separating device according to the present disclosure is generally introduced into an extraction borehole in vertical alignment, the terms "upper" and "lower" are used here, but the separating device may also be positioned in horizontal orientation in the extraction borehole (in which case, upper typically would refer to the most upstream portion and lower would refer to the most downstream portion of the separating device, when in service).

The separating device according to the present disclosure comprises a stack of at least three annular discs defining a central annular region 1, 11 (see Figures 2, 3H, 4H) along a central axis. The annular discs 2, 12, 13 (see Figures 3A - 3F and 4A - 4F) have an upper side 3, 14, 16 and an underside 4, 15, 17 (see Figures 3B, 4B).

In some embodiments, the upper side 3 of each annular disc 2 each has one or more spacers 5 (see Figure 3A), and the underside 4 of each annular disc does not comprise any spacers (see Figure 3B). The one or more spacers 5 of the upper side 3 of each annular disc 2 contact the underside 4 of the adjacent annular disc, defining a separating gap 6 (see Figures 3B - 3D).

The contact area 18 of the spacers 5 may be planar, so that the spacers 5 have a planar contact area with the adjacent annular disc (see Figures 3C and 3E). The planar contact area 18 is in contact with the adjacent underside 4 of the adjacent annular disc. The annular discs are stacked in such a way that between the individual discs there is in each case a separating gap 6 for the removal of solid particles.

The upper side 3 of each annular disc 2 may have only one spacer 5. In this case, the spacers 5 of the annular discs 2 are stacked in such a way that they lie on top of each other. Typically, the upper side 3 of each annular disc 2 has two or more spacers 5 which are distributed over the circumference of the upper side 3 of the annular discs 2.

The underside 4 of each annular disc 2 may be formed at right angles to the central axis.

In some further embodiments, the upper side 14 and the underside 15 of every second annular disc 12 in the stack each has one or more spacers 5 (see Figures 4A - 4F). The upper side 16 and the underside 17 of the respectively adjacent annular discs 13 do not comprise any spacers (see Figures 4H - 4J). The one or more spacers 5 of the upper side 14 of each annular disc 12 contact the underside 17 of the adjacent annular disc 13, defining a separating gap 6 (see Figures 4H - 4J), and the one or more spacers 5 of the underside 15 of each annular disc 12 contact the upper side 16 of the adjacent annular disc 13 defining a separating gap 6.

The upper side 14 and the underside 15 of each annular disc 12 each may have only one spacer 5. Typically, the upper side 14 and the underside 15 of each annular disc 12 each has two or more spacers 5 which are distributed over the circumference of the upper side 14 and the underside 15 of the annular discs 12.

The contact area 18 of the spacers 5 may be planar, so that the spacers 5 have a planar contact area with the adjacent annular disc (see Figures 4C, 4E). The planar contact area 18 of the spacers 5 of the upper side 14 of an annular disc 12 is in contact with the underside 17 of the adjacent annular disc 13, and the planar contact area 18 of the spacers 5 of the underside 15 of an annular disc 12 is in contact with the upper side 16 of the adjacent annular disc 13. The annular discs are stacked in such a way that between the individual discs there is in each case a separating gap 6 for the removal of solid particles.

Every upper side 16 of an annular disc 13 which does not comprise any spacers may be formed at right angles to the central axis, and every underside 17 of an annular disc 13 which does not comprise any spacers may be formed at right angles to the central axis.

The separating device further comprises a perforated pipe 7 located in the central annular region 1, 11 (see Figures 1 and 2). The perforated pipe or base pipe is co-centric with the central annular region.

The base pipe is perforated, i.e. provided with holes, in the region of the central annular region; it is not perforated outside the region of the central annular region. The perforation 22 serves the purpose of directing the filtered fluid, i.e. the fluid flow freed of the solid particles, such as for example gas, oil or mixtures thereof, into the interior of the base pipe, from where it can be transported or pumped away.

Pipes such as those that are used in the oil and gas industry for metallic filters (wire wrap filter, metal mesh screen) may be used as the base pipe. The perforation is provided in accordance with patterns customary in the industry, for example 30 holes with a diameter of 9.52 mm may be introduced over a base pipe length of 0.3048 m (corresponding to 1 foot).

Threads 23 are usually cut at both ends of the base pipe 7 and can be used for screwing the base pipes together into long strings.

The base pipe can consist of a metallic material, a polymer or ceramic material. The base pipe may consist of a metallic material such as steel, for example steel L80. Steel L80 refers to steel that has a yield strength of 80 000 psi (corresponding to about 550 MPa). As an alternative to steel L80, steels that are referred to in the oil and gas industry as J55, N80, C90, T95, P110 and L80Cr13 (see Drilling Data Handbook, 8th Edition, IFP Publications, Editions Technip, Paris, France) may also be used. Other steels, in particular corrosion-resistant alloy and high-alloy steels, may also be used as the material for the base pipe. For special applications in corrosive conditions, base pipes of nickel-based alloys or Duplex stainless steels may also be used. It is also possible to use aluminum materials as the material for the base pipe, in order to save weight. Furthermore, base pipes of titanium or titanium alloys may also be used.

The inside diameter of the annular discs must be greater than the outside diameter of the base pipe. This is necessary on account of the differences with regard to the thermal expansion between the metallic base pipe and the material from which the annular discs are made and also for technical reasons relating to flow. It has been found to be favorable in this respect that the inside diameter of the annular discs is at least 0.5 mm and at most 10 mm greater than the outside diameter of the base pipe. In particular embodiments, the inside diameter of the annular discs is at least 1.5 mm and at most 5 mm greater than the outside diameter of the base pipe.

The outside diameter of the base pipe is typically from 1 inch to 10 inches.

The separating device further comprises two end caps 8, 9 (see Figures 1 and 2) at the upper and lower ends of the central annular region 1, 11. The end caps are produced from metal, usually steel and typically from the same material as the base pipe.

The end caps 8, 9 may be firmly connected to the base pipe 7. The end caps may be fastened to the base pipe by means of welding, clamping, riveting or screwing. During assembly, the end caps are pushed onto the base pipe after the central annular region and are subsequently fastened on the base pipe. In the embodiments of the separating device as disclosed herein that is shown in Figures 1 and 2, the end caps are fastened by means of welding. If the end caps are fastened by means of clamping connections, friction-increasing structural design measures are preferably taken. Friction-increasing coatings or surface structurings may be used for example as friction-increasing measures. The friction-increasing coating may be configured for example as a chemical-nickel layer with incorporated hard material particles, preferably diamond particles. The layer thickness of the nickel layer is in this case for example 10 - 25 µm; the average size of the hard particles is for example 20 - 50 µm. The friction-increasing surface structures may be applied for example as laser structuring.

The separating device of the present disclosure further comprises a shock absorber 10 at the lower end and/or at the upper end of the central annular region (see Figures 2 and 5) for absorption of mechanical shock loads.

The energy absorption capacity of the shock absorber, i.e. the energy that can be absorbed by the shock absorber, of the separating device disclosed herein should be at least as high as the impact energy of a mechanical shock load. Preferably, the energy absorption capacity of the shock absorber should be higher than the impact energy of a mechanical shock load, but only to an extent that allows smooth damping instead of rigid damping. Preferably, the energy absorption capacity of the shock absorber is at most 200% of the impact energy, more preferably at most 150%, even more preferably at most 120%. The energy absorption capacity of the shock absorber may be at least as high as the impact energy of a mechanical shock load and at most as high as 5 times the impact energy of a mechanical shock load. Preferably, the energy absorption capacity of the shock absorber may be at least as high as the impact energy of a mechanical shock load and at most as high as 2 times the impact energy of a mechanical shock load. More preferably, the energy absorption capacity of the shock absorber may be at least 1.1 times the impact energy of a mechanical shock load and at most 1.3 times the impact energy of a mechanical shock load. Even more preferably, the energy absorption capacity of the shock absorber may be at least 1.15 times the impact energy of a mechanical shock load and at most 1.25 times the impact energy of a mechanical shock load.

The impact energy of a mechanical shock load can be calculated as the potential energy of the central annular region at a fall from a defined height, more specifically from a height of 10 to 150 cm. The potential energy E_{pot} can be calculated according to the formula:

$$E_{impact} = E_{pot} = m * g * h$$

wherein E_{impact} is the impact energy of a mechanical shock load, E_{pot} is the potential energy of the central annular region at a fall from a height h, m is the mass of the central annular region, g is the earth acceleration and h is the height of the fall of the separating device.

Impact energy of a mechanical shock load may not only arise from a fall from a defined height, but also from side impact, for example during introduction of the separating device into the borehole.

The energy absorption capacity of the shock absorber may be from 1 J to 15,000 J. For smaller separating devices with a diameter of the basepipe of 0.59 inch and an outer diameter of the annular discs of 30 mm, the energy absorption capacity of the shock absorber may be from 1 J to 500 J. For larger separating devices with a diameter of the basepipe of 5.5 inch and an outer diameter of the annular discs of 170 mm, the energy absorption capacity of the shock absorber may be from 30 J to 15,000 J.

The energy absorption capacity of the shock absorber should preferably be larger than the impact energy of a mechanical shock load, as not only the mass of the central annular region, but also the mass of the complete separating device comprising the base pipe needs to be considered.

The shock absorber may be a mechanical shock absorber or a shock absorber using a fluid or a combination of both.

The shock absorber using a fluid is absorbing mechanical shock loads by viscous friction, using a gas or a liquid, preferably a liquid, similar to pneumatic or hydraulic shock absorbers which are used for vehicles. The shock absorber using a fluid may be ring-shaped and stacked on the base pipe on top of the central annular region, or several conventional pneumatic or hydraulic shock absorbers may be used and placed along the circumference of the annular stack.

The mechanical shock absorber may comprise a spring package 19 (see Figure 5). The spring package comprises at least one spring 20 and may comprise a plurality of springs 20 (see Figure 5).

In some embodiments, the spring package comprises at least two springs being arranged in axial direction on top of each other.

In some embodiments, the spring package comprises coil springs, cup springs, helical disc springs or combinations thereof. Preferably, the spring package comprises cup springs. Cup springs are also known as Belville springs, coned-disc springs or disc springs. The cup springs are stacked on the basepipe. The inner diameter of the cup springs is larger than the outer diameter of the basepipe. The outer diameter of the cup springs may be suitably selected to correspond to the outer diameter of the central annular region, i.e. of the annular discs.

The spring package may have a linear or a non-linear spring characteristic curve. Preferably, the spring package has a non-linear spring characteristic curve.

The spring characteristic curve is the curve describing the load of the spring in relation to the compression of the spring.

The non-linear spring characteristic curve may be a progressively rising spring characteristic curve. The non-linear spring characteristic curve may also be a non-linear spring characteristic curve with portions of different slopes. For these types of non-linear spring characteristic curves, a higher energy absorption with less space can be achieved.

In some embodiments, the spring package comprises at least two different springs being arranged in axial direction on top of each other. The two different springs may be of the same type having different spring constants, for example two different cup springs having different spring constants. The spring package may comprise more than one spring of the same type and with the same spring constant.

In some embodiments, the spring package comprises at least three different springs being arranged in axial direction on top of each other. The three different springs may be of the same type having different spring constants, for example three different cup springs having different spring constants. The spring package may comprise more than one spring of the same type and with the same spring constant.

In some embodiments, the spring package comprises a first and a second part, wherein the slope of the portion of the spring characteristic curve of the spring package which corresponds to the second part of the spring package is higher than the slope of the portion of the spring characteristic curve of the spring package which corresponds to the first part of the spring package.

In some embodiments, the spring package comprises a first and a second and a third part, wherein the slope of the portion of the spring characteristic curve of the spring package which corresponds to the second part of the spring package is higher than the slope of the portion of the spring characteristic curve of the spring package which corresponds to the first part of the spring package, and wherein the slope of the portion of the spring characteristic curve of the spring package which corresponds to the third part of the spring package is higher than the slope of the spring characteristic curve of the spring package which corresponds to the second part of the spring package.

In some embodiments, the spring package comprises more than three parts, wherein each portion of the spring characteristic curve of the spring package which belongs to each of the parts has a different slope.

The first part of the spring package whose portion of the spring characteristic curve has the lowest slope may be positioned near the end cap or near the central annular region. The third part of the spring package whose portion of the spring characteristic curve has a higher slope than the portions of the spring characteristic curve corresponding to the first and second part of the spring package may be positioned near the end cap or near the central annular region. The second part of the spring package whose portion of the spring characteristic curve has a higher slope than the portion of the spring characteristic curve corresponding to the first part of the spring package and a lower slope than the portion of the spring characteristic curve corresponding to the second part of the spring package may be positioned between the first and the third part of the spring package, or near the end cap, or near the central annular region.

The slope of the spring characteristic curve may be from 100 N/mm to about 10 million N/mm. Typically, the slope of the spring characteristic curve of the second part of the spring package is two to ten times higher than the slope of the spring characteristic curve of the first part of the spring package, and the slope of the spring characteristic curve of the third part of the spring package is two to ten times higher than the slope of the spring characteristic curve of the second part of the spring package.

The first part of the spring package may be pre-loaded during assembly of the separating device by at least 80% of its energy absorption capacity and is able to absorb at most 20% of its energy absorption capacity by mechanical shock loads. The energy absorption capacity may also be referred to as spring capacity. The further part of the spring package, that is the part which comprises the second part and the third part and eventually further parts of the spring package, which means the parts that have a higher slope in the corresponding portion of the spring characteristic curve than the corresponding portion of the first part, may be pre-loaded during assembly of the separating device by at most 20% of its energy absorption capacity and is able to absorb at least 80% of its energy absorption capacity by mechanical shock loads.

The thickness of the cup springs may be from 0.2 to 10 mm and typically is from 2 to 4 mm.

The springs of the spring package may be made from steel, such as steel according to DIN EN 10089 and DIN EN 10132-4, or may also be made from corrosion resistant and high-alloy steels. For special applications in corrosive conditions, nickel-based alloys or Duplex stainless steels may also be used.

The number and thickness of the cup springs may be selected depending on the impact energy, the weight of the central annular region and the size of available space for the shock absorber.

It is desirable that the length of the shock absorber in axial direction is not too high relative to the length of the central annular region, as the central annular region is the productive filtering portion of the separating device. In some embodiments of the separating device disclosed herein, the length of the shock absorber in axial direction is at most 15% of the length of the central annular region. In some embodiments of the separating device disclosed herein, the length of the shock absorber in axial direction is at most 10%, or at most 5%, or at most 2% of the length of the central annular region.

The separating device as disclosed herein may further comprise a thermal compensator at the upper end or at the lower end or at both ends of the central annular region. The thermal compensator serves to compensate for the different thermal expansions of the base pipe and the central annular region, from ambient temperature to operation temperature. The thermal compensator may for example comprise one or more springs, or a compensating bush consisting of a material on the basis of polytetrafluoroethylene (PTFE), or a tubular double-walled liquid-filled container, the outer walls of which are corrugated in the axial direction.

Figures 5 shows a preferred example of a shock absorber of a separating device as disclosed herein, representing a detail of the separating device of Figure 2. Figure 5 shows a shock absorber comprising different cup springs. Figures 6A shows a side view and Figure 6B shows a cross-sectional view of the shock absorber represented in Figure 5, before it has been assembled on the separating device.

The mechanical shock absorber 10 shown in Figures 5 and 6A - 6B comprises a spring package 19. The spring package 19 comprises a plurality of cup springs 20 being arranged in axial direction on top of each other. The cup springs 20 are stacked on the basepipe 7. The spring package is arranged between the end cap 8, 9 and the central annular region 1, 11. Between the central annular region 1, 11 and the spring package 19, an intermediate annular disc 25 is stacked on the base pipe to transfer axial loads from the spring package to the central annular region. The intermediate annular disc may be made from steel or from a brittle-hard material as used for the annular discs of the central annular region.

The spring package 19 comprises a first part 26 of the spring package, a second part 27 of the spring package and a third part 28 of the spring package. The first part 26 of the spring package comprises four cup springs, each cup spring having a material thickness of 1.5 mm, for example. The four cup springs are stacked in an alternating orientation on the base pipe, as can be seen from Figure 5. The total axial length of the first part 26 of the spring package is 22 mm, for example. The second part 27 of the spring package comprises twelve cup springs, each cup spring having a material thickness which is larger than the material thickness of the cup springs of the first part 26 of the spring package and is 3.5 mm, for example. The twelve cup springs are stacked in an alternating orientation on the base pipe, as can be seen from Figure 5. The total axial length of the second part 27 of the spring package is 54 mm, for example. The third part 28 of the spring package comprises four cup springs, each cup spring having a material thickness of 3.5 mm, for example. The first and the second of these four cup springs in the stack are arranged in the same orientation, parallelly on top of each other in axial direction, resulting in a total material strength of the first and second cup spring of 7 mm. The third and the fourth of these four cup springs are also arranged in the same orientation, parallelly on top of each other in axial direction, resulting in a total material strength of the third and fourth cup spring of 7 mm. The third and fourth cup spring are arranged in axial direction mirror-symmetrically to the first and second cup spring. The total axial length of the third part 28 of the spring package is 20 mm, for example.

The spring package 19 has a non-linear spring characteristic curve with three portions of different slopes, the first portion corresponding to the first part 26 of the spring package, the second portion corresponding to the second part 27 of the spring package and the third portion being corresponding to the third part 28 of the spring package. The slope of the second portion of the spring characteristic curve is higher than the slope of the first portion of the spring characteristic curve, and the slope of the third portion of the spring characteristic curve is higher than the slope of the second portion of the spring characteristic curve. The slope of the first portion of the spring characteristic curve may be 1500 N/mm, for example. The slope of the first portion of the spring characteristic curve corresponds to the spring constant of the individual four cup springs of the first part 26 of the spring package. The slope of the second portion of the spring characteristic curve may be 5000 N/mm, for example. The slope of the second portion of the spring characteristic curve corresponds to the spring constant of the individual twelve cup springs of the second part 27 of the spring package. The slope of the third portion of the spring characteristic curve may be 10000 N/mm, for example.

During assembly of the separating device, it can be pre-loaded for example to 6000 N, corresponding to a compression of 4 mm of the cup springs of the first part 26 of the spring package. If higher loads are applied to the separating device, such as mechanical shock loads during the installation procedure, the cup springs of the first part 26 of the spring package can be no further compressed, and the cup springs of the second part 27 of the spring package will be compressed and can absorb the mechanical shock loads. If even higher loads are applied to the separating device, and the cup springs of the second part 27 of the spring package are completely compressed, then the cup springs of the third part 28 of the spring package will be compressed and can absorb the even higher mechanical shock loads.

The first, second and third parts of the spring package 19 may also comprise a different number of individual cup springs, different from the example shown in Figures 5 and 6A - 6B. For example, only one cup spring for each part of the spring package may be used, or alternatively less or more cup springs may be used than in the example shown in Figures 5 and 6A - 6B. The thickness of the individual cup springs in the first, second and third part may differ from the example shown in Figures 5 and 6A - 6B.

In some embodiments of the separating device disclosed herein, the shock absorber comprises a spring package 19 comprising only a first part 26 of the spring package and a second part 27 of the spring package. For example, the shock absorber may comprise a first part 26 comprising four cup springs, each cup spring having a material thickness of 1.5 mm and being stacked in an alternating orientation on the base pipe, with a total axial length of the first part of 22 mm, and a second part 27 comprising four cup springs, each cup spring having a material thickness of 3.5 mm and being stacked in an alternating orientation on the base pipe, with a total axial length of the second part 27 of 22 mm.

In some embodiments of the separating device disclosed herein, the shock absorber comprises a spring package 19 comprising only a first part 26 of the spring package. Preferably, the shock absorber comprises a spring package 19 comprising a first part 26 and a second part 27 of the spring package. More preferably, the shock absorber comprises a spring package 19 comprising a first part 26, a second part 27 and a third part 28. The slope of the portion of the spring characteristic curve of the spring package which corresponds to the second part of the spring package is higher than the slope of the portion of the spring characteristic curve of the spring package which corresponds to the first part of the spring package, and the slope of the portion of the spring characteristic curve of the spring package which corresponds to the third part of the spring package is higher than the slope of portion of the spring characteristic curve of the spring package which corresponds to the second part of the spring package. It is also possible that the shock absorber comprises a spring package with more than three parts.

The first part 26 of the spring package 19 of the mechanical shock absorber may have the additional function of thermal compensation. During assembly of the separating device, the annular discs are pre-loaded in order to keep the annular discs in their correct radial position and in order to maintain the predefined height of the separating gap by keeping intimate contact of the annular discs throughout operation. The operation temperature of the separating device is usually above ambient temperature and may be up to 200 °C or 300 °C. The thermal expansion of the brittle-hard annular discs and the thermal expansion of the basepipe from ambient temperature to operation temperature are different. The first part 26 of the spring package 19 is able to compensate these different thermal expansions and to maintain the predefined height of the separating gap throughout operation condition including pressure and temperature changes downhole.

Another example of a shock absorber of a separating device as disclosed herein, which is not shown in the drawings, is a spring package comprising a helical disc spring. A helical disc spring has a non-linear progressively increasing spring characteristic curve.

Tests carried out by the inventors have proven that an impact energy from a fall of 130 cm has been absorbed without damage by the shock absorber of the separating device disclosed herein as shown in Figures 2, 5 and 6A - 6B. Even after multiple impacts by dropping from 130 cm height no failure has occurred. This means a considerable gain in safety margins in comparison to known separating devices. For the tests a separating device with a base pipe having an outer diameter of 1.18 inches has been used. For this separating device, from its potential energy it can be calculated that an impact energy of 56 J needs to be absorbed when dropping from a height of 130 cm. The spring package used as shock absorber had an energy absorption capacity exceeding 180 J and three different cup springs resulting in a spring characteristic curve with three portions with different slopes.

The central annular region of the separating device disclosed herein can, and typically does, comprise more than 3 annular discs. The number of annular discs in the central annular region can be from 3 to 500, but also larger numbers of annular discs are possible. For example, the central annular region can comprise 50, 100, 250 or 500 annular discs.

The annular discs 2 and the annular discs 12, 13, respectively, of the central annular region 1, 11 are stacked on top of each other, resulting in a stack of annular discs. The annular discs 2 and the annular discs 12, 13, respectively, are stacked and fixed in such a way that between the individual discs there is in each case a separating gap 6 for the removal of solid particles.

Every upper side 3, 14 of an annular disc 2, 12 which has one or more spacers may be inwardly or outwardly sloping, preferably inwardly sloping, in the regions between the spacers (see Figures 3D, 4D), and every underside 15 of an annular disc 12 which has one or more spacers may be inwardly or outwardly sloping, preferably inwardly sloping, in the regions between the spacers (see Figure 4D).

If the upper side, or the upper side and underside, respectively, of the annular discs which have one or more spacers, is inwardly or outwardly sloping in the regions between the spacers, in the simplest case, the sectional line on the upper side of the ring cross-section of the annular discs is straight and the ring cross-section of the annular discs in the portions between the spacers is trapezoidal (see Figures 3D, 4D), the thicker side of the ring cross-section having to lie on the respective inlet side of the flow to be filtered. If the flow to be filtered comes from the direction of the outer circumferential surface of the central annular region, the thickest point of the trapezoidal cross-section must lie on the outside and the upper side of the annular discs is inwardly sloping. If the flow to be filtered comes from the direction of the inner circumferential surface of the annular disc, the thickest point of the trapezoidal cross-section must lie on the inside and the upper side of the annular discs is outwardly sloping. The forming of the ring cross-section in a trapezoidal shape, and consequently the forming of a separating gap that diverges in the direction of flow, has the advantage that, after passing the narrowest point of the filter gap, irregularly shaped particles, i.e. non-spherical particles, tend much less to get stuck in the filter gap, for example due to rotation of the particles as a result of the flow in the gap. Consequently, a separating device with a divergent filter gap formed in such a way is less likely to become plugged and clogged than a separating device in which the separating gaps have a filter opening that is constant over the ring cross-section.

The height of the separating gap, i.e. the filter width, may be from 50 to 1000 μm. The height of the separating gap is measured at the position of the smallest distance between two adjacent annular discs.

The annular discs 2, 12, 13 may have a height of 1 to 12 mm. More specifically, the height of the annular discs may be from 2 to 7 mm. The height of the annular discs is the thickness of the annular discs in axial direction.

In some embodiments, the annular discs 12 having one or more spacers on the upper side 14 and the underside 15 have a height of 1 to 12 mm, and the annular discs 13 which do not comprise any spacers may have the same height as the annular discs 12 with spacers, or may be thinner than the annular discs 12 with spacers. The annular discs 13 may have a height of 2 to 7 mm, for example. With the reduced height of the annular discs 13 which do not comprise any spacers, the open flow area can be increased.

The base thickness of the annular discs is measured in the region between the spacers and, in the case of a trapezoidal cross-section, on the thicker side in the region between the spacers. The axial thickness or height of the annular discs in the region of the spacers corresponds to the sum of the base thickness and the filter width.

The height of the spacers determines the filter width of the separating device, that is to say the height of the separating gap between the individual annular discs. The filter width additionally determines which particle sizes of the solid particles to be removed, such as for example sand and rock particles, are allowed to pass through by the separating device and which particle sizes are not allowed to pass through. The height of the spacers is specifically set in the production of the annular discs.

For any particular separating device, the annular discs may have uniform base thickness and filter width, or the base thickness and/or filter width may vary along the length of the separating device (e.g., to account for varying pressures, temperatures, geometries, particle sizes, materials, and the like).

The outer contours of the annular discs may be configured with a bevel 24, as illustrated in Figures 3C - 3D and 4C - 4D. It is also possible to configure the annular discs with rounded edges. This may, for some applications, represent even better protection of the edges (versus straight edged) from the edge loading that is critical for the materials from which the annular discs are produced.

The circumferential surfaces (lateral surfaces) of the annular discs may be cylindrical. However, it is also possible to form the circumferential surfaces as outwardly convex, in order to achieve a better incident flow.

In practice, it is expected that the annular discs are produced with an outer diameter that is adapted to the borehole of the extraction well provided in the application concerned, so that the separating device according to the present disclosure can be introduced into the borehole with little play, in order to make best possible use of the cross-section of the extraction well for achieving a high delivery output. The outer diameter of the annular discs may be 20 - 250 mm, but outer diameters greater than 250 mm are also possible, as the application demands.

The radial ring width of the annular discs may lie in the range of 8 - 20 mm. These ring widths are suitable for separating devices with basepipe diameters in the range of $2^3/_8$ to 5½ inches.

As already stated, the spacers arranged on the upper side, or on the upper side and the underside, respectively, of the annular discs have planiform contact with the adjacent annular disc. The spacers make a radial throughflow possible and therefore may be arranged radially aligned on the first major surface of the annular discs. The spacers may, however, also be aligned at an angle to the radial direction.

The transitions between the surface of the annular discs, i.e. the upper side, or the upper side and the underside of the annular discs, and the spacers are typically not formed in a step-shaped or sharp-edged manner. Rather, the transitions between the surface of the annular discs and the spacers are typically configured appropriately for the material from which the annular discs are made, i.e. the transitions are made with radii that are gently rounded. This is illustrated in Figures 3E and 4E.

The contact area of the spacers, that is to say the planar area with which the spacers are in contact with the adjacent annular disc are not particularly limited, and may be, for instance, rectangular, round, rhomboidal, elliptical, trapezoidal or else triangular, while the shaping of the corners and edges should always be appropriate for the material from which the annular discs are made, e.g. rounded.

Depending on the size of the annular discs, the contact area 18 of the individual spacers is typically between 4 and 100 mm^2.

The spacers 5 may be distributed over the circumference of the annular discs (see Figures 3A and 4A). The number of spacers may be even or odd.

In some embodiments of the separating device, the annular discs are stacked in such a way that the spacers lie on top of each other, i.e. the spacers are arranged in alignment one above another. In other embodiments of the separating device, the annular discs are stacked in such a way that the spacers do not lie on top of each other. If only one spacer is provided on the upper side 3 of the annular discs 2, or on the upper side 14 and underside 15 of the annular discs 12, the annular discs are stacked in such a way that the spacers lie on top of each other.

Each annular disc comprises a material independently selected from the group consisting of (i) ceramic materials; (ii) mixed materials having fractions of ceramic or metallic hard materials and a metallic binding phase; and (iii) powder metallurgical materials with hard material phases formed in-situ.

In some embodiments, the annular discs are produced from a material which is independently selected from the group consisting of (i) ceramic materials; (ii) mixed materials having fractions of ceramic or metallic hard materials and a metallic binding phase; and (iii) powder metallurgical materials with hard material phases formed in-situ. These materials are typically chosen based upon their relative abrasion- and erosion-resistance to solid particles such as sands and other mineral particles and also corrosion-resistance to the extraction media and the media used for maintenance, such as for example acids.

The material which the annular discs comprise can be independently selected from this group of materials, which means that each annular disc could be made from a different material. But for simplicity of design and manufacturing, of course, all annular discs of the separating device could be made from the same material.

The ceramic materials which the annular discs can comprise or from which the annular discs are made can be selected from the group consisting of (i) oxidic ceramic materials; (ii) non-oxidic ceramic materials; (iii) mixed ceramics of oxidic and non-oxidic ceramic materials; (iv) ceramic materials having a secondary phase; and (v) long- and/or short fiber-reinforced ceramic materials.

Examples of oxidic ceramic materials are materials chosen from Al_2O_3, ZrO_2, mullite, spinel and mixed oxides. Examples of non-oxidic ceramic materials are SiC, B_4C, TiB_2 and Si_3N_4. Ceramic hard materials are, for example, carbides and borides. Examples of mixed materials with a metallic binding phase are WC-Co, TiC-Fe and TiB2-FeNiCr. Examples of hard material phases formed in situ are chromium carbides. An example of fiber-reinforced ceramic materials is C/SiC. The material group of fiber-reinforced ceramic materials has the advantage that it leads to still greater internal and external pressure resistance of the separating devices on account of its greater strength in comparison with monolithic ceramic.

The aforementioned materials are distinguished by being harder than the typically occurring hard particles, such as for example sand and rock particles, that is to say the HV (Vickers) or HRC (Rockwell method C) hardness values of these materials lie above the corresponding values of the surrounding rock. Materials suitable for the annular discs of the separating device according to the present disclosure have HV hardness values greater than 11 GPa, or even greater than 20 GPa.

All these materials are at the same time distinguished by having greater brittleness than typical unhardened steel alloys. In this sense, these materials are referred to herein as "brittle-hard".

Materials suitable for the annular discs of the separating device according to the present disclosure have moduli of elasticity greater than 200 GPa, or even greater than 350 GPa.

Materials with a density of at least 90%, more specifically at least 95%, of the theoretical density may be used, in order to achieve the highest possible hardness values and high abrasion and erosion resistances. Sintered silicon carbide (SSiC) or boron carbide may be used as the material for the annular discs. These materials are not only abrasion-resistant but also corrosion-resistant to the treatment fluids usually used for flushing out the separating device and stimulating the borehole, such as acids, for example HCl, bases, for example NaOH, or else steam.

Particularly suitable are, for example, SSiC materials with a fine-grained microstructure (mean grain size ≤ 5 µm), such as those sold for example under the names 3M^{TM} silicon carbide type F and 3M^{TM} silicon carbide type F plus from 3M Technical Ceramics, Kempten, Germany. Furthermore, however, coarse-grained SSiC materials may also be used, for example with a bimodal microstructure. In one embodiment, 50 to 90% by volume of the grain size distribution consisting of prismatic, platelet-shaped SiC crystallites of a length of from 100 to 1500 µm and 10 to 50% by volume consisting of prismatic, platelet-shaped SiC crystallites of a length of from 5 to less than 100 µm (3M^{TM} silicon carbide type C from 3M Technical Ceramics, Kempten, Germany).

Apart from these single-phase sintered SSiC materials, liquid-phase-sintered silicon carbide (LPS-SiC) can also be used as the material for the annular discs. An example of such a material is 3M^{TM} silicon carbide type T from 3M Technical Ceramics, Kempten, Germany. In the case of LPS-SiC, a mixture of silicon carbide and metal oxides is used as the starting material. LPS-SiC has a higher bending resistance and greater toughness, measured as a KIc value, than single-phase sintered silicon carbide (SSiC).

The annular discs of the separating device disclosed herein may be prepared by the methods that are customary in technical ceramics or powder metallurgy, that is to say by die pressing of pressable starting powders and subsequent sintering. The annular discs may be formed on mechanical or hydraulic presses in accordance with the principles of "near-net shaping", debindered and subsequently sintered to densities > 90% of the theoretical density. The annular discs may be subjected to 2-sided facing on their upper side and underside.

To protect the brittle-hard annular discs from mechanical damage during handling and fitting into the borehole, the separating device may be surrounded by a tubular shroud 21 (see Figure 1) that can be freely passed through by a flow. This shroud may be configured for example as a coarse-mesh screen and preferably as a perforated plate. The shroud may be produced from a metallic material, such as from steel, particularly from corrosion-resistant steel. The shroud may be produced from the same material as that used for producing the basepipe.

The shroud can be held on both sides by the end caps; it may also be firmly connected to the end caps. This fixing is possible for example by way of adhesive bonding, screwing or pinning; the shroud may be welded to the end caps after assembly.

The inside diameter of the shroud must be greater than the outside diameter of the annular discs. This is necessary for technical reasons relating to flow. It has been found to be favorable in this respect that the inside diameter of the shroud is at least 0.5 mm and at most 15 mm greater than the outside diameter of the annular discs. The inside diameter of the shroud may be at least 1.5 mm and at most 5 mm greater than the outside diameter of the annular discs.

In Figures 3A - 3L, one embodiment of a central annular region of a separating device as disclosed herein is represented. Figures 3A - 3F show various details of an individual annular disc 2 of the central annular region 1. Figures 3G - 3L show the central annular region 1 constructed from annular discs 2 of Figures 3A - 3L, representing various details of the stack of annular discs. Figure 3A shows a plan view of the upper side 3 of the annular disc 2, Figure 3B shows a cross-sectional view along the sectional line denoted in Figure 3A by “3B”, Figures 3C - 3D show enlarged details of the cross-sectional view of Figure 3B. The enlarged detail of Figure 3C is in the region of a spacer, the enlarged detail of Figure 3D is in the region between two spacers. Figure 3F shows a 3D view of the annular disc 2, and Figure 3E shows a 3D representation along the sectional line denoted in Figure 3A by “3E”. Figure 3G shows a plan view of the central annular region 1 constructed from annular discs 2 of Figures 3A - 3F, Figure 3H shows a cross-sectional view along the sectional line denoted in Figure 3G by “3H”, Figures 3I - 3J show enlarged details of the cross-sectional view of Figure 3H. The enlarged detail of Figure 3I is in the region of a spacer, the enlarged detail of Figure 3J is in the region between two spacers. Figure 3K shows a 3D view of the central annular region 1, and Figure 3L shows a 3D representation along the sectional line denoted in Figure 3 I by “3L”.

The removal of the solid particles takes place at the inlet opening of a separating gap 6, which may be divergent, i.e. opening, in the direction of flow (see Figures 3D and 3J) and is formed between two annular discs lying one over the other. The annular discs are designed appropriately for the materials from which the annular discs are produced and the operational environment intended for the devices made with such annular discs, e.g., materials may be chosen for given pressure, temperature and corrosive operating conditions, and so that cross-sectional transitions may be configured without notches so that the occurrence of flexural stresses is largely avoided by the structural design.

The upper side 3 of each annular disc 2 has fifteen spacers 5 distributed over its circumference. The underside 4 does not comprise any spacers. The spacers 5 are of a defined height, with the aid of which the height of the separating gap 6 (gap width of the filter gap, filter width) is set. The spacers are not separately applied or subsequently welded-on spacers, they are formed directly in production, during the shaping of the annular discs.

The contact area 18 of the spacers 5 is planar (see Figures 3C, 3E), so that the spacers 5 have a planar contact area with the underside 4 of the adjacent annular disc. The upper side 3 of the annular discs is plane-parallel with the underside 4 of the annular discs in the region of the contact area 18 of the spacers 5, i.e. in the region of contact with the adjacent annular disc. The underside 4 of the annular discs is formed as smooth and planar and at right angles to the disc axis and the central axis of the central annular region. At the planar contact area of the spacers, the annular discs contact the respective adjacent annular disc.

The upper side 3 of an annular disc 2 having fifteen spacers 5 is inwardly sloping, in the regions between the spacers. The ring cross-section of the annular discs in the portions between the spacers is trapezoidal (see Figure 3D), the thicker side of the ring cross-section lying on the outside, i.e. on the inlet side of the flow to be filtered.

In Figures 4A - 4L, a further embodiment of a central annular region of a separating device as disclosed herein is represented. Figures 4A - 4F show various details of individual annular discs 12 of the central annular region 11. Figures 4G - 4L show the central annular region 11 constructed from annular discs 12 and 13, representing various details of the stack of annular discs. Figure 4A shows a plan view of the upper side 14 and of the underside 15 of the annular disc 12, Figure 4B shows a cross-sectional view along the sectional line denoted in Figure 4A by “4B”, Figures 4C - 4D show enlarged details of the cross-sectional view of Figure 4B. The enlarged detail of Figure 4C is in the region of the spacers, the enlarged detail of Figure 4D is in the region between the spacers. Figure 4F shows a 3D view of the annular disc 12, and Figure 4E shows a 3D representation along the sectional line denoted in Figure 4A by “4E”. Figure 4G shows a plan view of the central annular region 11 constructed from annular discs 12 and 13, Figure 4H shows a cross-sectional view along the sectional line denoted in Figure 4G by “4H”, Figures 4I - 4J show enlarged details of the cross-sectional view of Figure 4H. The enlarged detail of Figure 4I is in the region of a spacer, the enlarged detail of Figure 4J is in the region between the spacers. Figure 4K shows a 3D view of the central annular region 11, and Figure 4L shows a 3D representation along the sectional line denoted in Figure 4G by “4L”.

The stack of annular discs 11 is composed of annular discs 12 and 13 which are stacked in an alternating manner. Every second annular disc in the stack is an annular disc 12 having fifteen spacers 5 on the upper side 14 of the annular disc 12 distributed over its circumference (see Figure 4A) and fifteen spacers 5 on the underside 15 of the annular disc 12 distributed over its circumference. The plan view of the upper side 14 of Figure 4A is identical to the plan view of the underside 15. The spacers 5 on the upper side 14 of the annular disc 12 may be positioned mirror-symmetrically to the spacers 5 on the underside 15 of the annular disc 10 as shown in Figure 4A, but it is also possible that the spacers on the upper side 14 are at positions different from the spacers of the underside 15. The spacers 5 of the annular discs 12 are of a defined height, with the aid of which the height of the separating gap 6 (gap width of the filter gap, filter width) is set. The spacers are not separately applied or subsequently welded-on spacers, they are formed directly in production, during the shaping of the annular discs.

The respectively adjacent annular discs of the annular discs 12 in the stack of annular discs 11 are annular discs 13 as shown in Figures 4H - 4J. The upper side 16 and the underside 17 of the annular discs 13 do not comprise any spacers.

The removal of the solid particles takes place at the inlet opening of a separating gap 6, which may be divergent, i.e. opening, in the direction of flow (see Figures 4D and 4J) and is formed between two adjacent annular discs lying one over the other. The annular discs are designed appropriately for the materials from which the annular discs are produced and the operational environment intended for the devices made with such annular discs, e.g., materials may be chosen for given pressure, temperature and corrosive operating conditions, and so that cross-sectional transitions may be configured without notches so that the occurrence of flexural stresses is largely avoided by the structural design.

The contact area 18 of the spacers 5 is planar (see Figures 4C, 4E), so that the spacers 5 have a planar contact area with the underside 17 or upper side 16 of the adjacent annular disc 13. The upper side 14 of the annular discs 12 is plane-parallel with the underside 15 of the annular discs 12 in the region of the contact area 18 of the spacers 5, i.e. in the region of contact with the adjacent annular disc. At the planar contact area of the spacers, the annular discs contact the respective adjacent annular disc 13.

The upper side 16 and the underside 17 of the annular discs 13 is formed as smooth and planar and at right angles to the disc axis and the central axis of the central annular region.

The upper side 14 and the underside 15 of an annular disc 12 having fifteen spacers 5 is inwardly sloping, in the regions between the spacers 5. The ring cross-section of the annular discs in the portions between the spacers is trapezoidal (see Figure 4D), the thicker side of the ring cross-section lying on the outside, i.e. on the inlet side of the flow to be filtered.

The separating device according to the present disclosure may be used for removing solid particles from a fluid. A fluid as used herein means a liquid or a gas or combinations of liquids and gases.

The separating device according to the present disclosure may be used in extraction wells in oil and/or gas reservoirs for separating solid particles from volumetric flows of mineral oil and/or natural gas. The separating device may also be used for other filtering processes for removing solid particles from fluids outside of extraction wells, processes in which a great abrasion resistance and a long lifetime of the separating device are required, such as for example for filtering processes in mobile and stationary storage installations for fluids or for filtering processes in naturally occurring bodies of water, such as for instance in the filtering of seawater. The separating device disclosed herein can also be used in a process for extracting ores and minerals. In the extraction of ore and many other minerals, there are problems of abrasion and erosion in the removal of solid particles from fluid flows. The separating device according to the present disclosure is particularly suitable for the separation of solid particles from fluids, in particular from mineral oil, natural gas and water, in extraction wells in which high and extremely high rates of flow and delivery volumes occur.

Claims

1. A separating device for removing solid particles from fluids, comprising:

- a stack of at least three annular discs defining a central annular region (1) along a central axis, each annular disc (2) having an upper side (3) and an underside (4), wherein the upper side (3) of each annular disc (2) each has one or more spacers (5), and wherein the one or more spacers (5) of the upper side (3) of each annular disc (2) contact the underside (4) of the adjacent annular disc defining a separating gap (6), and wherein each annular disc (2) comprises a material independently selected from the group consisting of (i) ceramic materials; (ii) mixed materials having fractions of ceramic or metallic hard materials and a metallic binding phase; and (iii) powder metallurgical materials with hard material phases formed in-situ,
- a perforated pipe (7), which is located inside the stack of at least three annular discs and on which the annular discs are stacked,
- an end cap (8) at the upper end of the central annular region and an end cap (9) at the lower end of the central annular region (1), and
- a shock absorber (10) at the lower end and/or at the upper end of the central annular region for absorption of mechanical shock loads.

2. A separating device for removing solid particles from fluids, comprising:

- a stack of at least three annular discs defining a central annular region (11) along a central axis, each annular disc (12, 13) having an upper side (14, 16) and an underside (15, 17), wherein the upper side (14) and the underside (15) of every second annular disc (12) in the stack each has one or more spacers (5), and wherein the upper side (16) and the underside (17) of the respectively adjacent annular discs (13) do not comprise any spacers, and wherein the one or more spacers (5) of the upper side (14) of each annular disc (12) contact the underside (17) of the adjacent annular disc (13) defining a separating gap (6), and wherein the one or more spacers (5) of the underside (15) of each annular disc (12) contact the upper side (16) of the adjacent annular disc (13) defining a separating gap (6), and wherein each annular disc (12, 13) comprises a material independently selected from the group consisting of (i) ceramic materials; (ii) mixed materials having fractions of ceramic or metallic hard materials and a metallic binding phase; and (iii) powder metallurgical materials with hard material phases formed in-situ,
- a perforated pipe (7), which is located inside the stack of at least three annular discs and on which the annular discs are stacked,
- an end cap (8) at the upper end of the central annular region and an end cap (9) at the lower end of the central annular region, and
- a shock absorber (10) at the lower end and/or at the upper end of the central annular region for absorption of mechanical shock loads.

3. The separating device according to claim 1 or 2, wherein the one or more spacers (5) have a planar contact area (18) with the adjacent annular disc.

4. The separating device according to any of claims 1 to 3, wherein the shock absorber (10) is a mechanical shock absorber or a shock absorber using a fluid or a combination of both.

5. The separating device according to claim 4, wherein the shock absorber (10) is a mechanical shock absorber, and wherein the mechanical shock absorber comprises a spring package (19), and wherein the spring package comprises at least one spring (20).

6. The separating device according to claim 5, wherein the spring package (19) comprises at least two springs (20), and wherein the springs (20) are arranged in axial direction on top of each other.

7. The separating device according to claim 5 or 6, wherein the spring package (19) comprises coil springs, cup springs, helical disc springs or combinations thereof, preferably cup springs.

8. The separating device according to any of claims 5 to 7, wherein the spring package (19) has a non-linear spring characteristic curve.

9. The separating device according to claim 8, wherein the non-linear spring characteristic curve is a progressively rising spring characteristic curve or a non-linear spring characteristic curve with portions of different slopes.

10. The separating device according to any of claims 1 to 9, wherein the annular discs in the stack of annular discs (1, 11) are stacked in such a way that the spacers are arranged in alignment one above another.

11. The separating device of any of claims 1 to 10, wherein the length of the shock absorber (10) in axial direction is at most 15% of the length of the central annular region (1, 11).

12. The separating device according to any of claims 1 to 11, wherein the energy absorption capacity of the shock absorber is at least as high as the impact energy of a mechanical shock load and at most as high as 5 times the impact energy of a mechanical shock load.

13. The separating device according to claim 12, wherein the impact energy of a mechanical shock load can be calculated as the potential energy of the central annular region at a fall from a height of 10 to 150 cm.

14. The separating device according to claim 12 or 13, wherein the energy absorption capacity of the shock absorber is from 1 J to 15,000 J.

15. The separating device according to any of claims 1 to 14, wherein the material of annular discs is sintered silicon carbide (SSiC) or boron carbide.

16. The separating device according to any of claims 1 to 15, further comprising a shroud (21) for protection from mechanical damage.

17. Use of the separating device of any of claims 1 to 16 for removing solid particles from fluids
in a process for extracting fluids from extraction wells, or
in water or in storage installations for fluids, or
in a process for extracting ores and minerals.

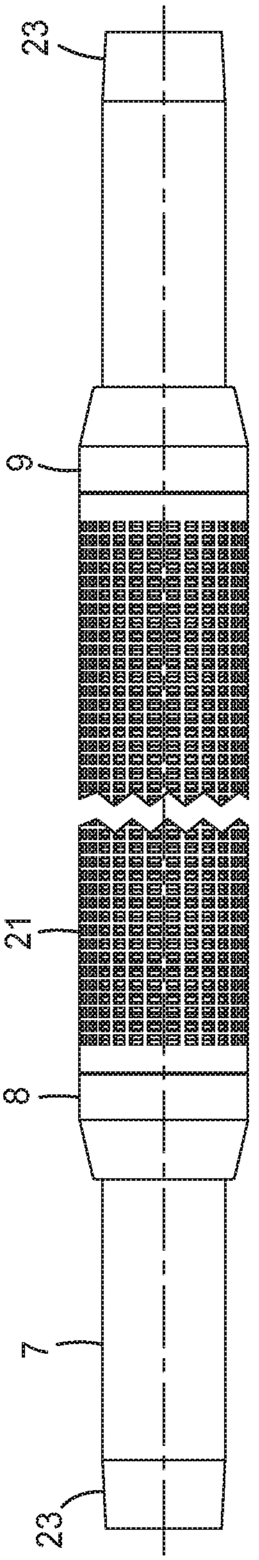

FIG. 1

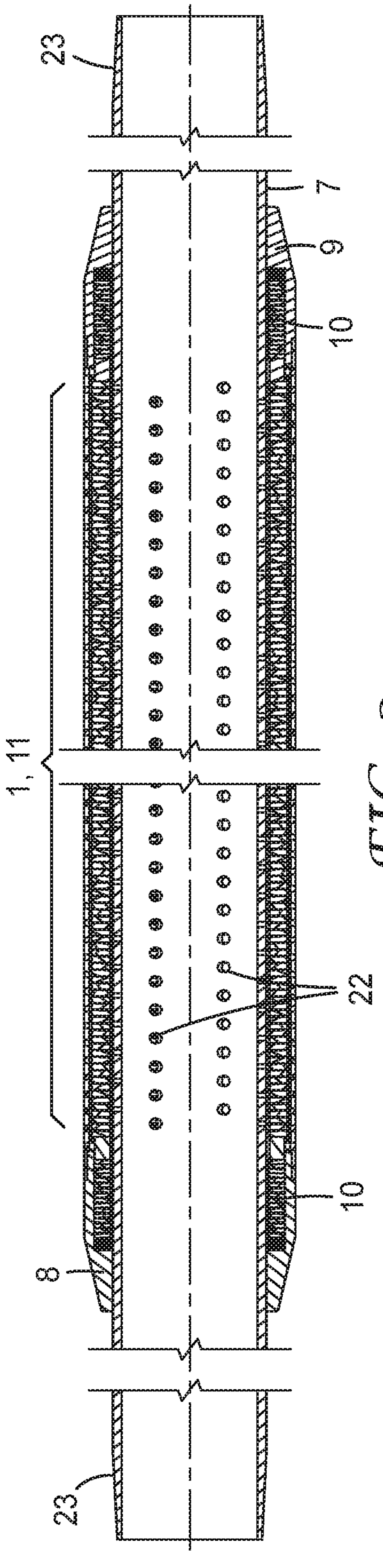

FIG. 2

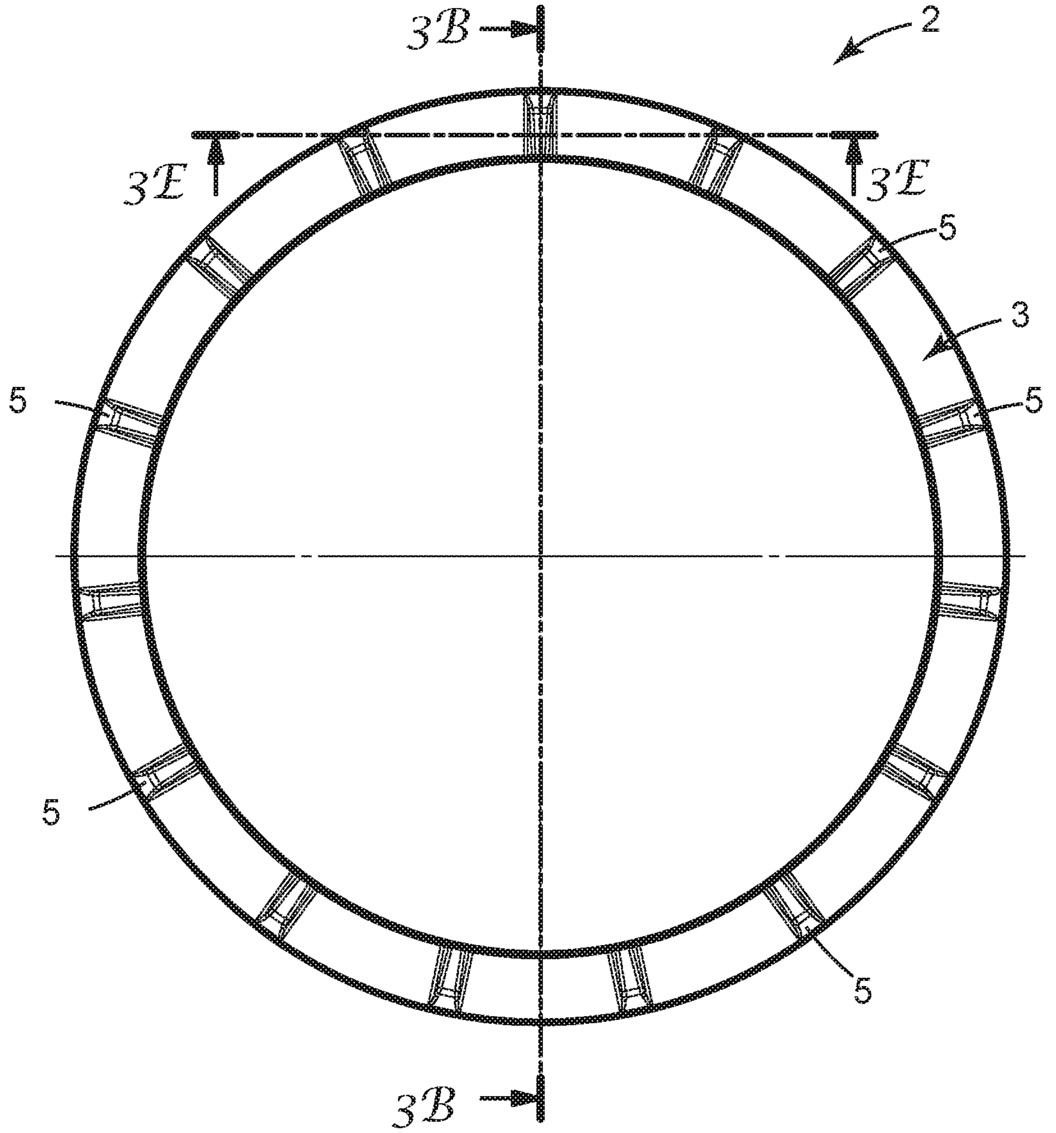

FIG. 3A

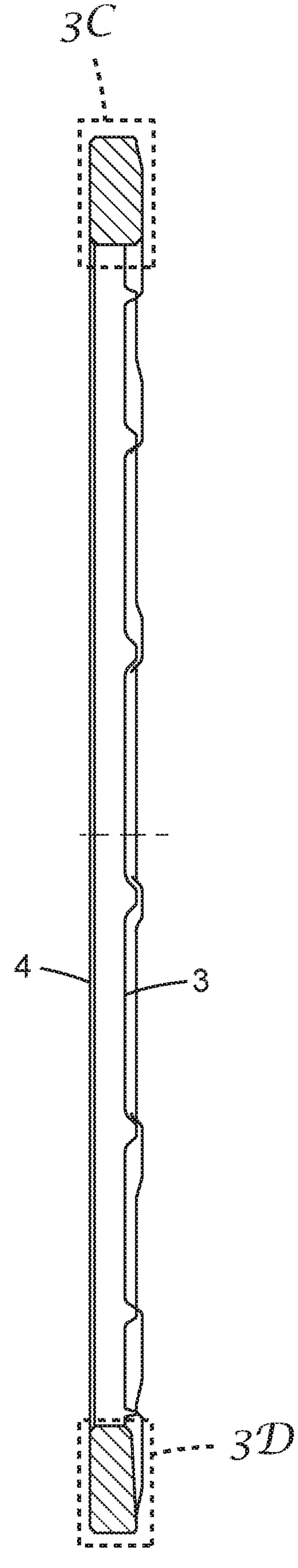

FIG. 3B

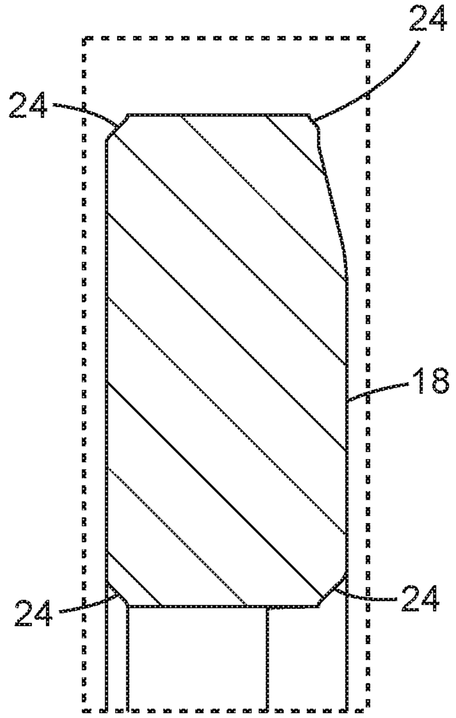

FIG. 3C

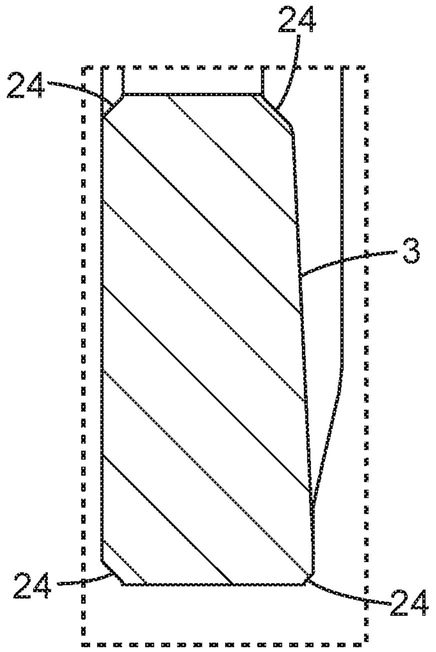

FIG. 3D

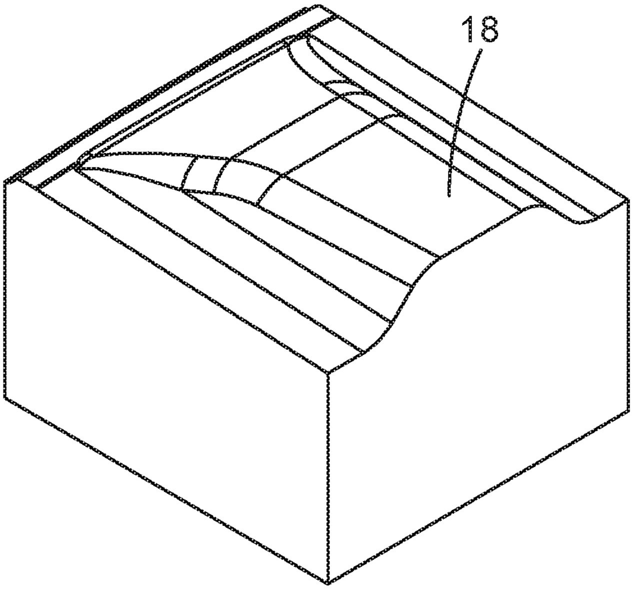

FIG. 3E

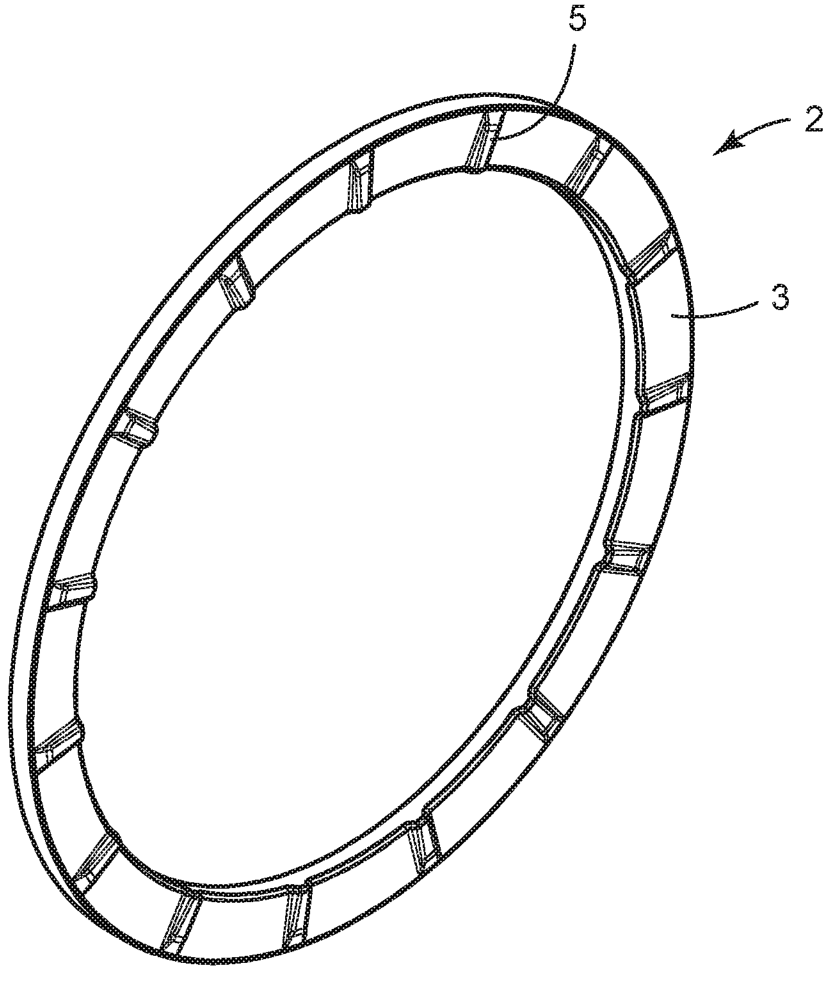

FIG. 3F

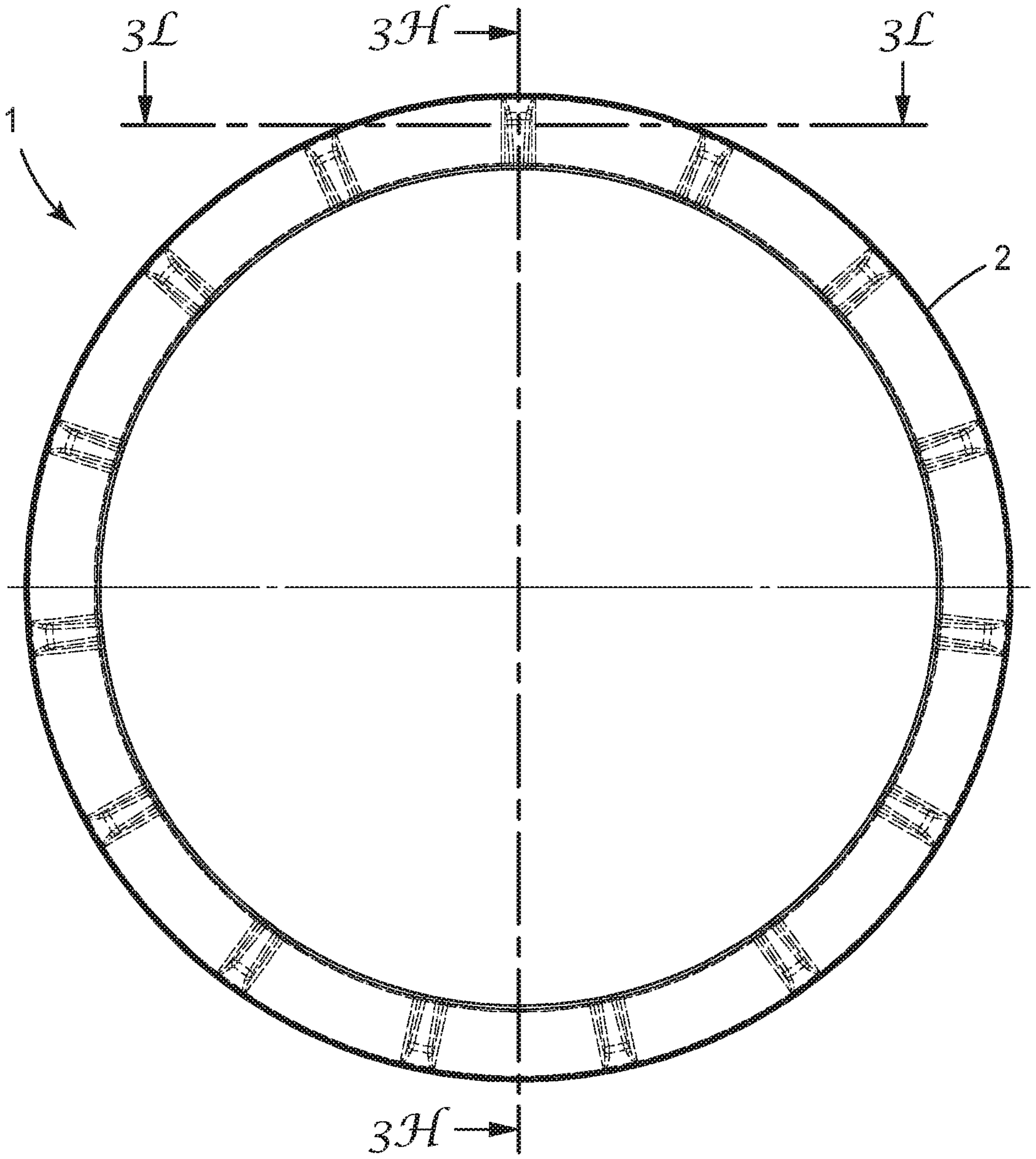

FIG. 3G

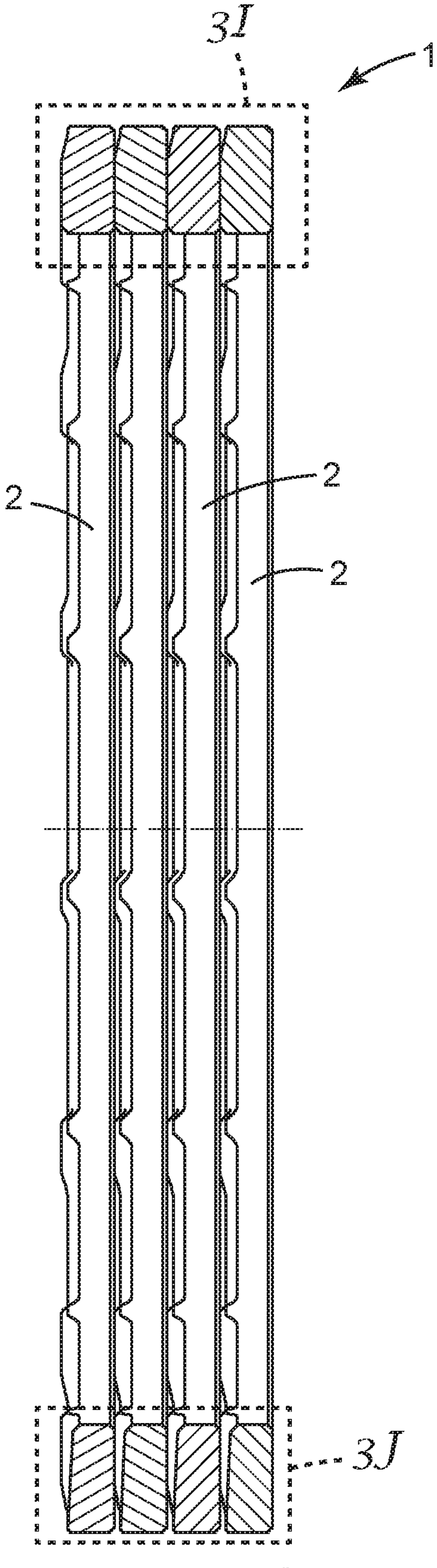

FIG. 3H

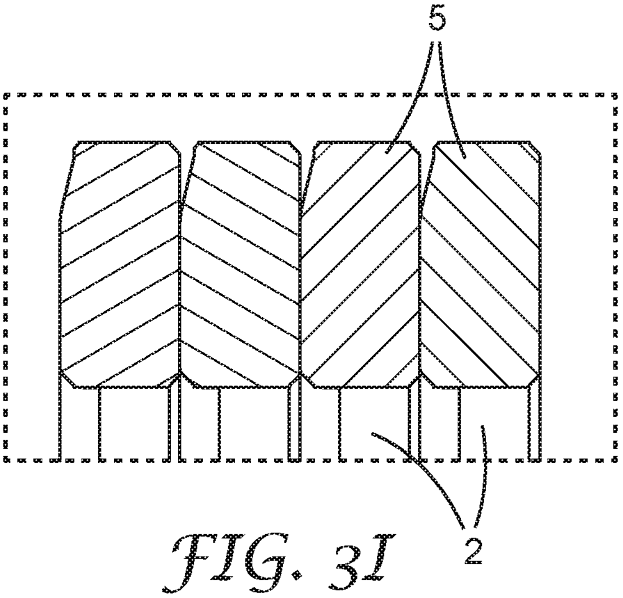

FIG. 3I

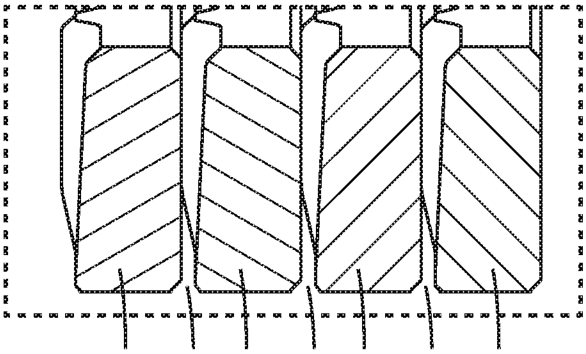

FIG. 3J

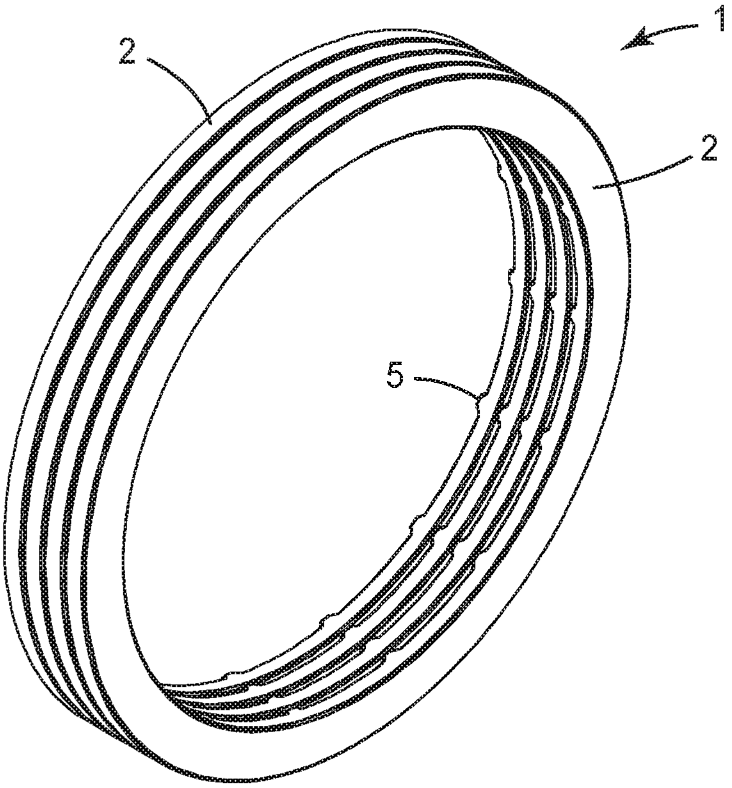

FIG. 3K

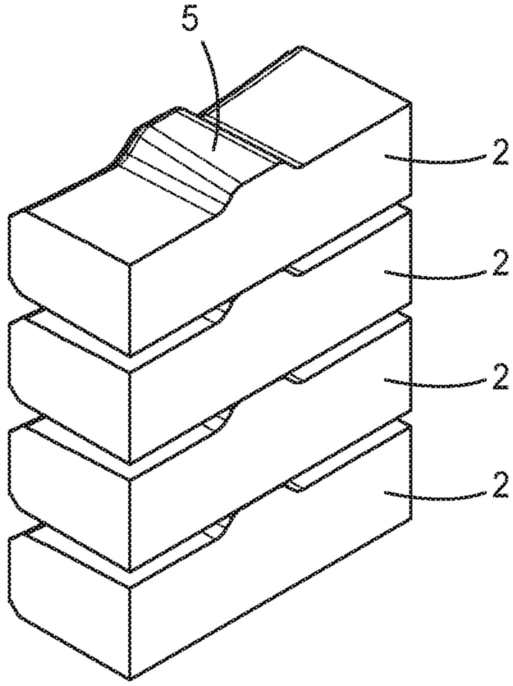

FIG. 3L

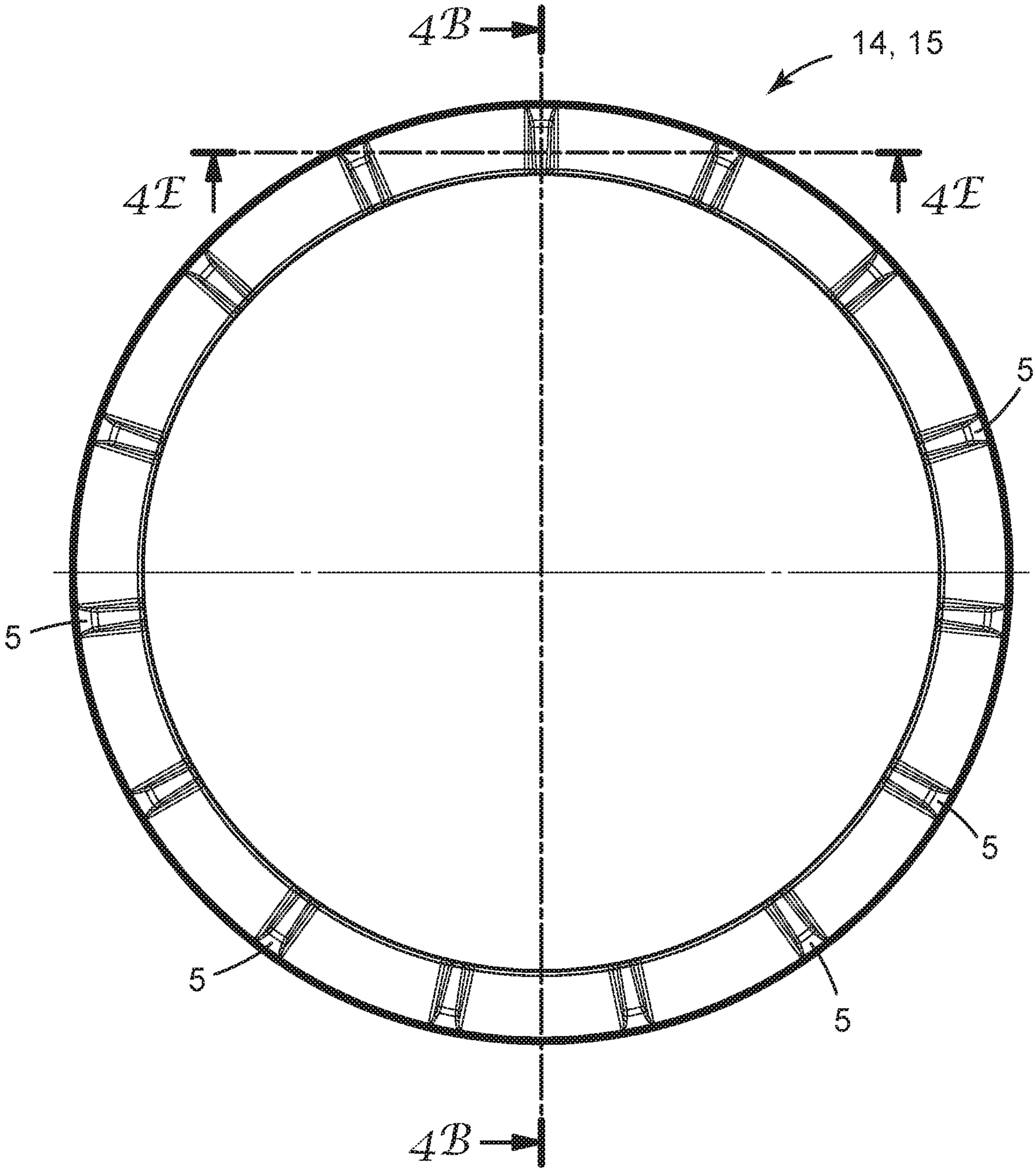

FIG. 4A

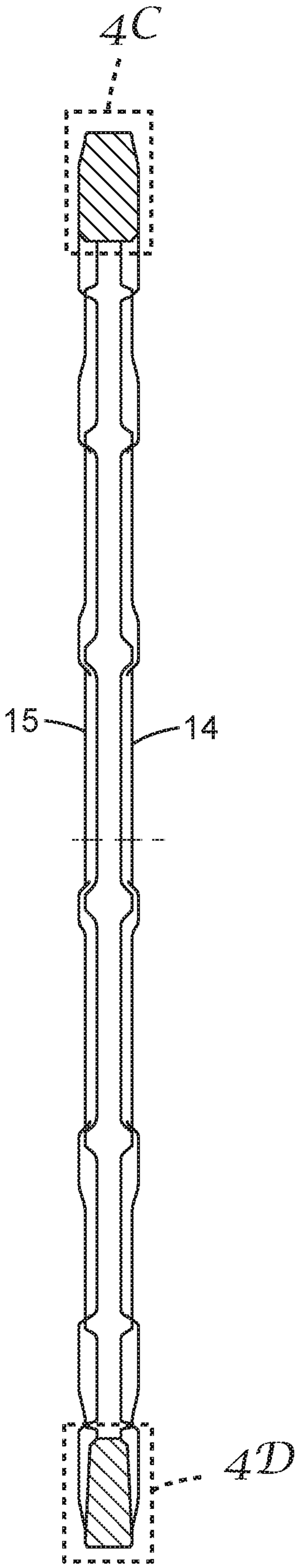

FIG. 4B

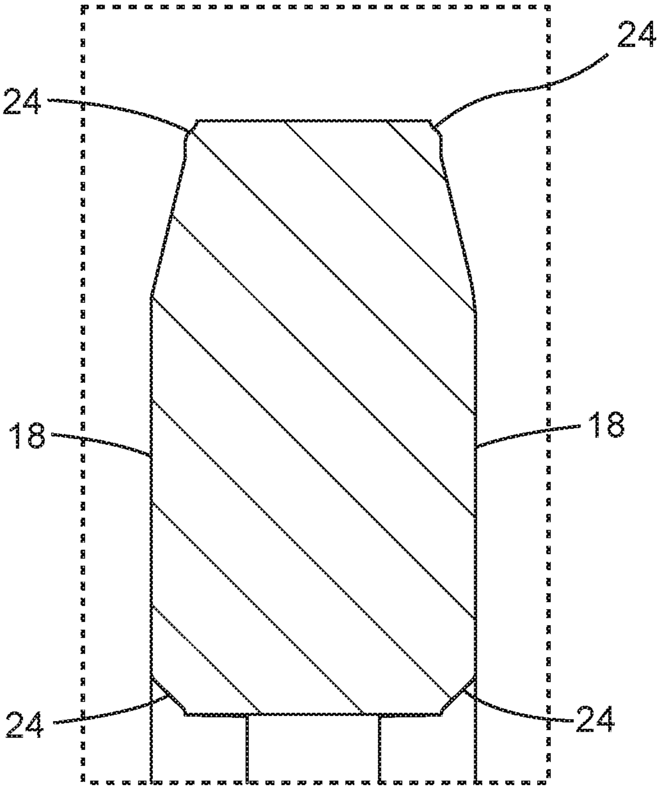

FIG. 4C

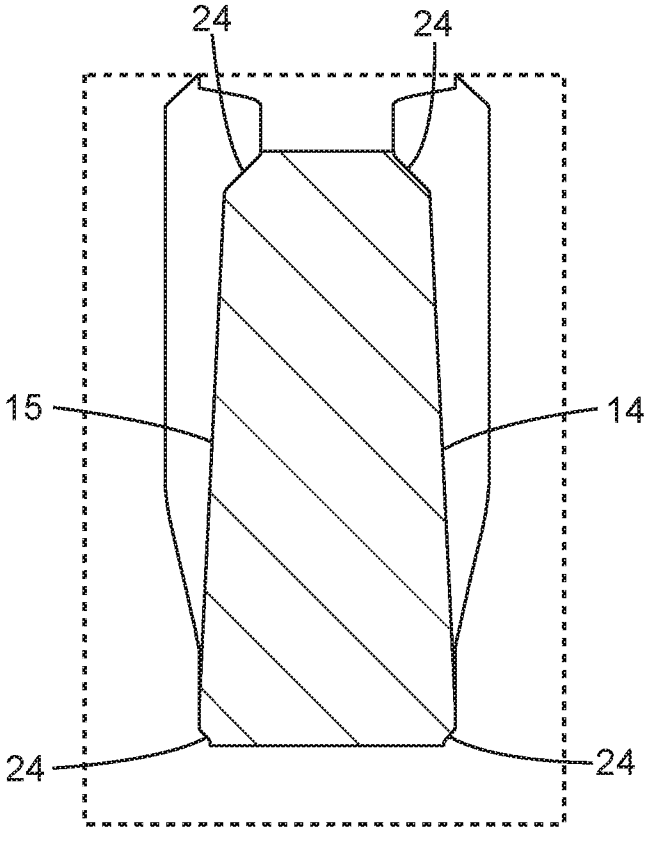

FIG. 4D

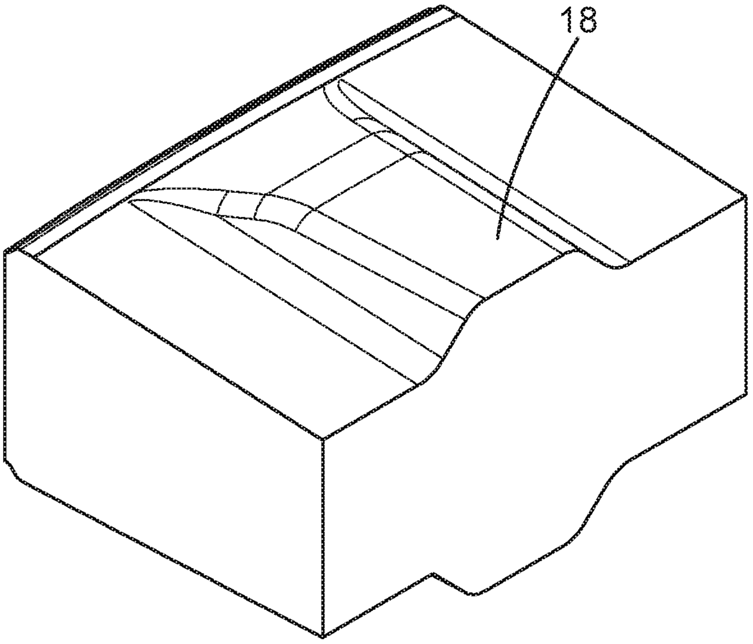

FIG. 4E

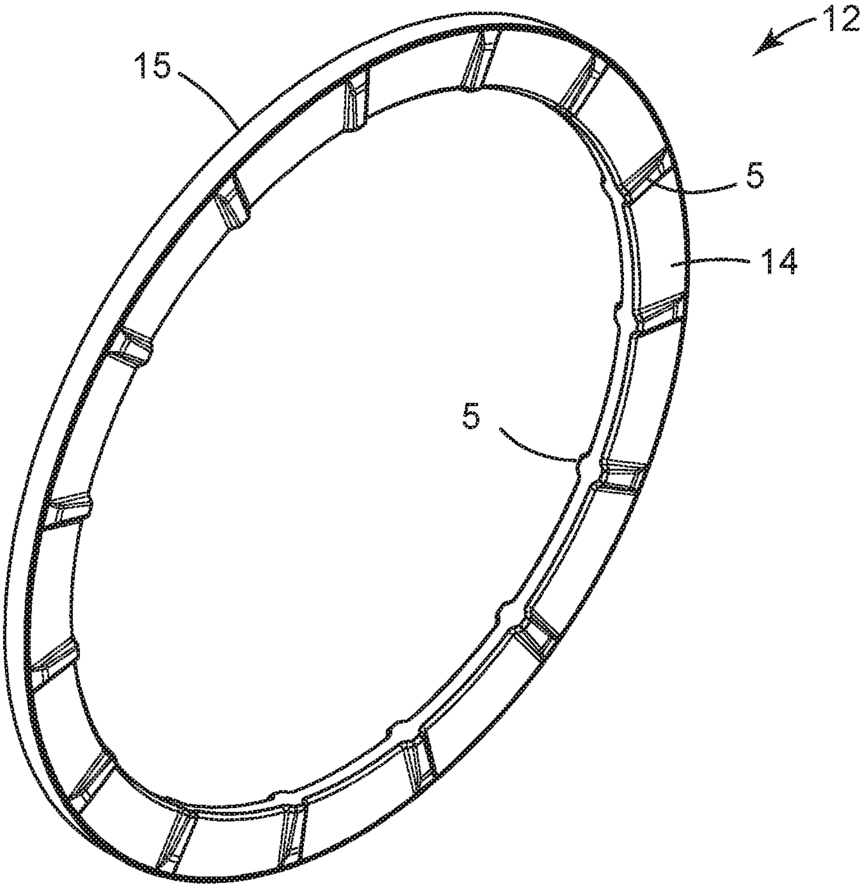

FIG. 4F

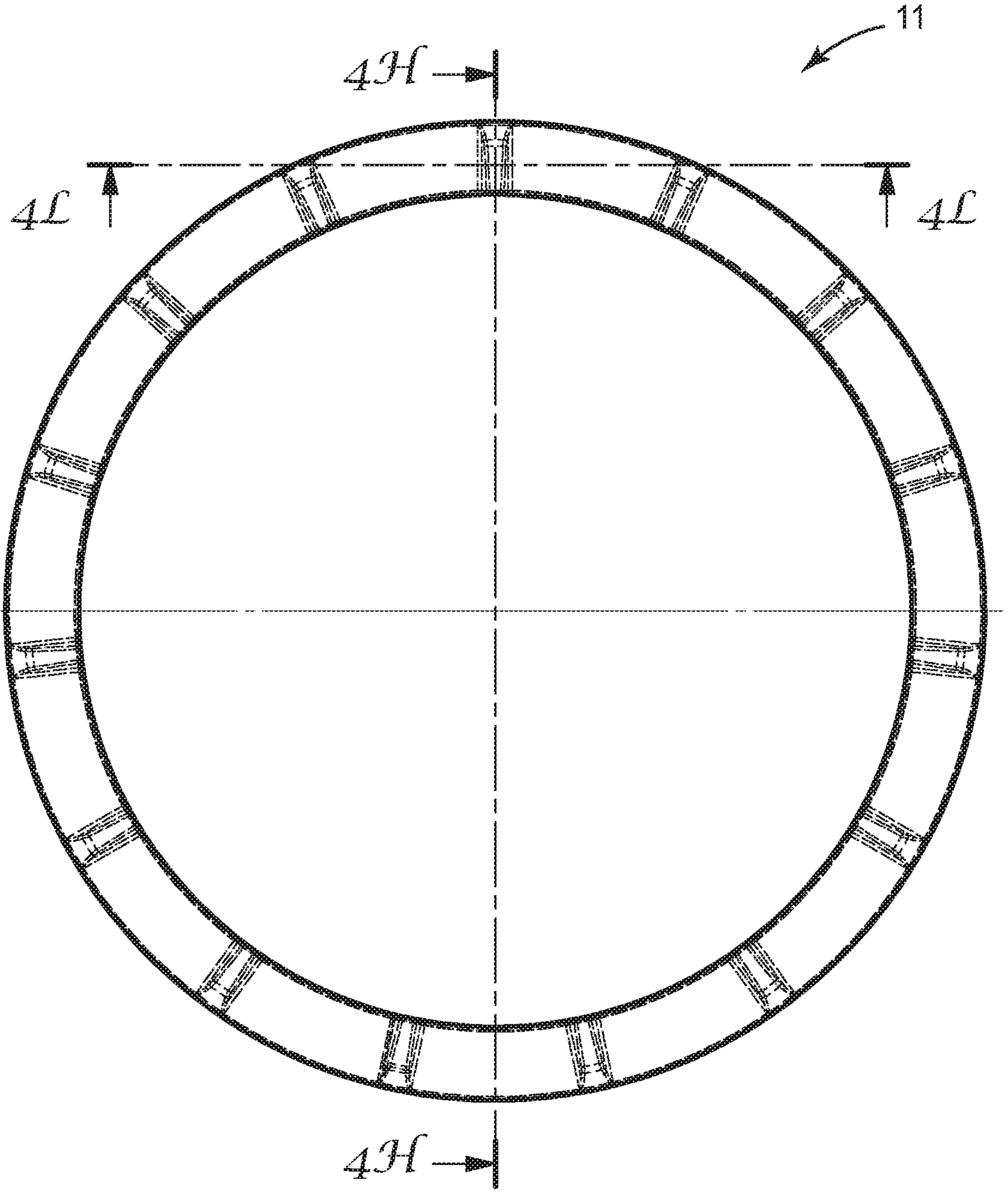

FIG. 4G

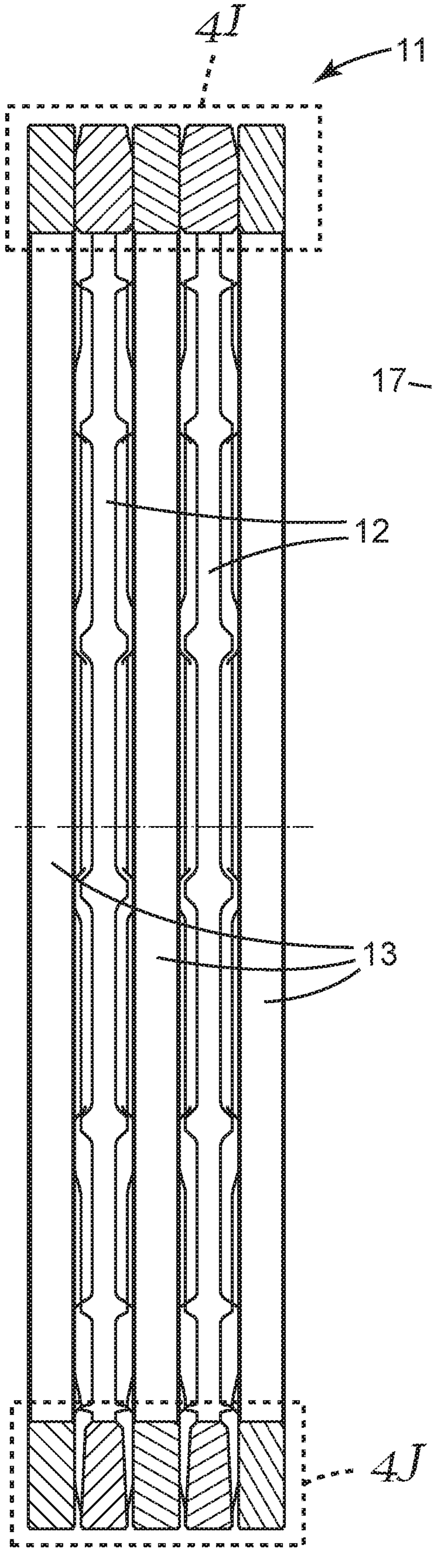

FIG. 4H

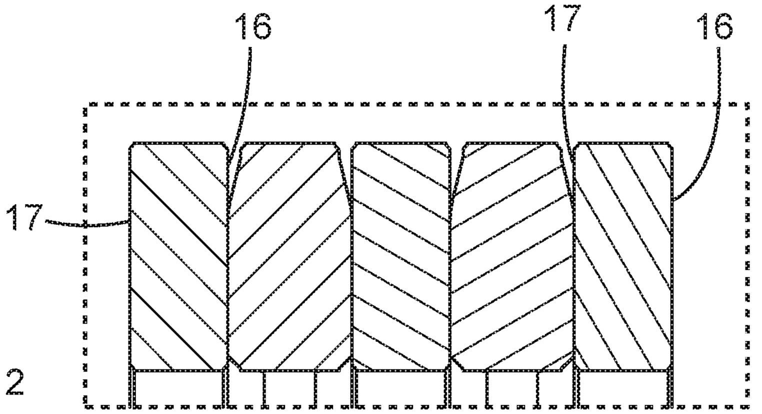

FIG. 4I

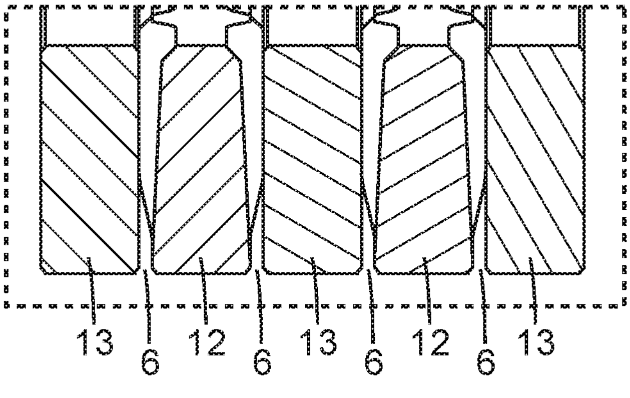

FIG. 4J

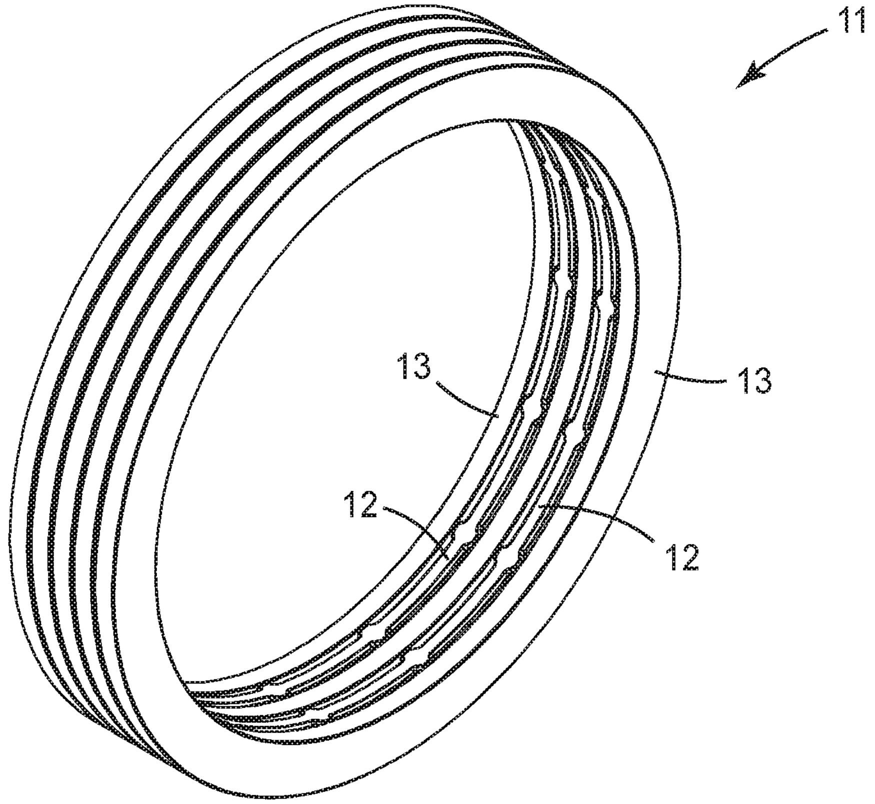

FIG. 4K

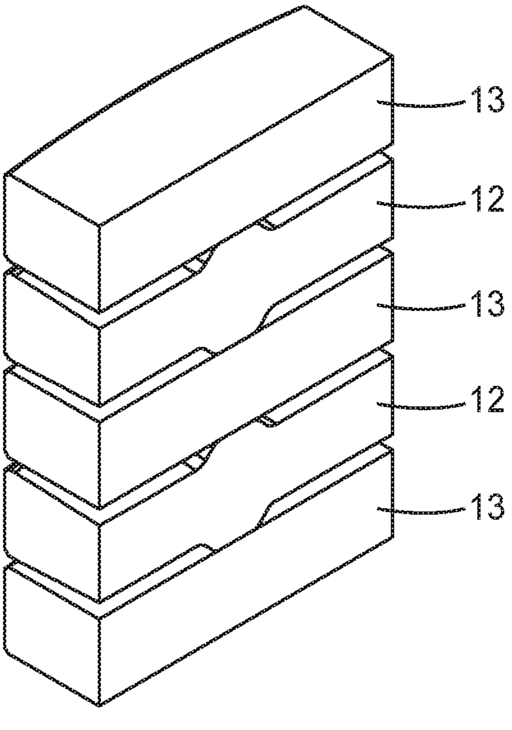

FIG. 4L

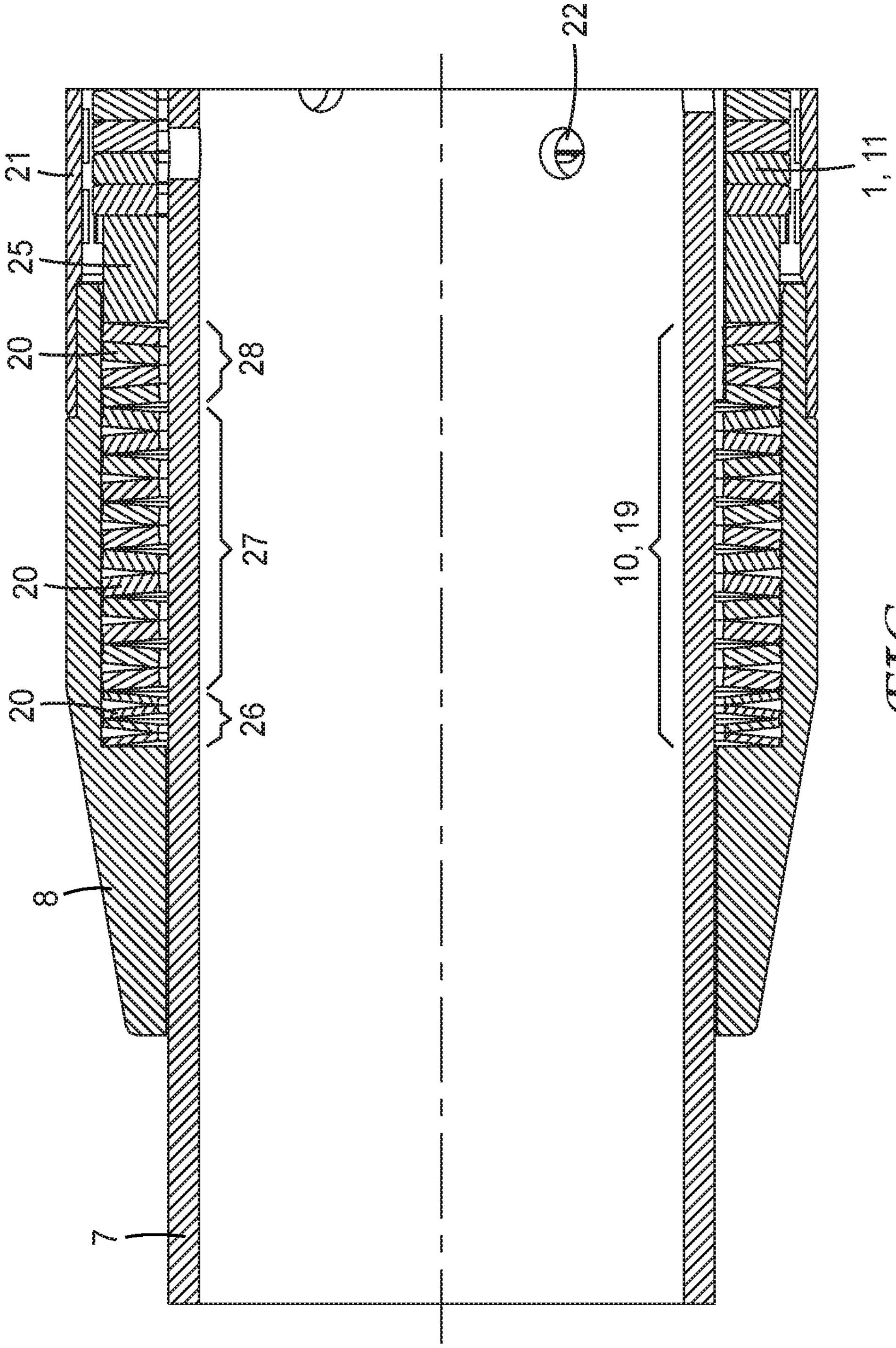

FIG. 5

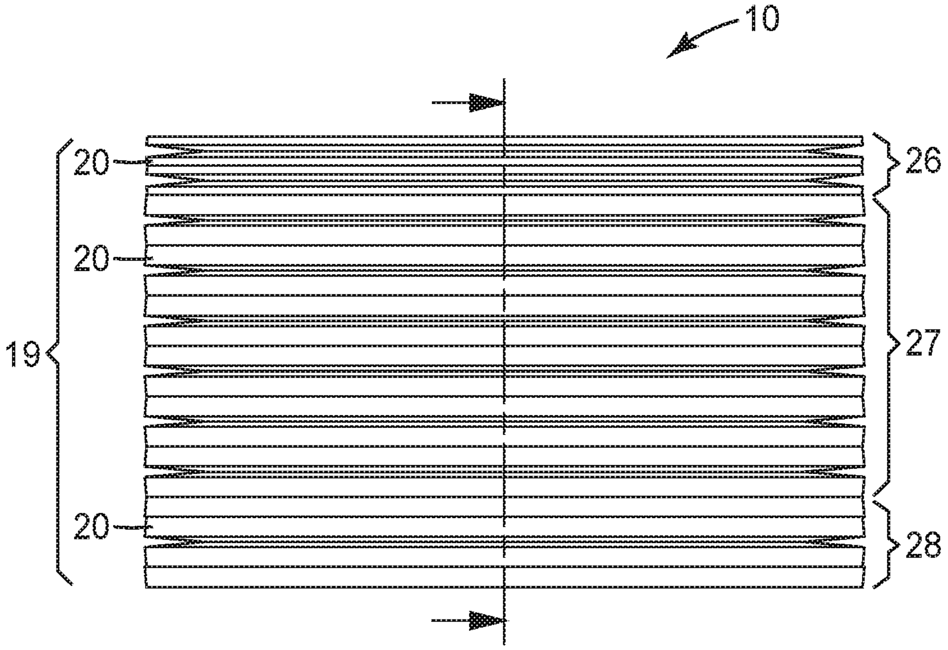

FIG. 6A

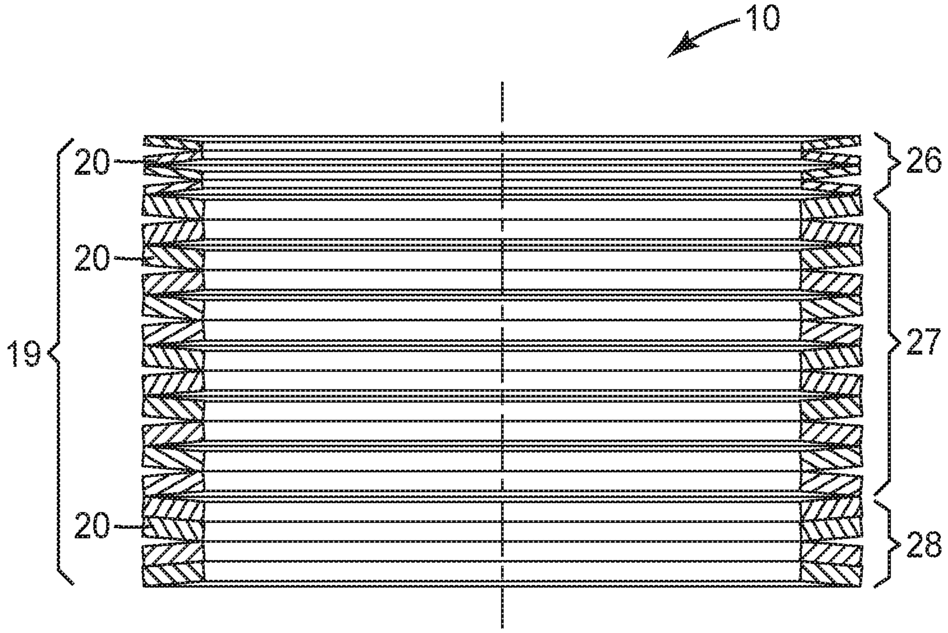

FIG. 6B

INTERNATIONAL SEARCH REPORT

International application No
PCT/IB2019/060577

A. CLASSIFICATION OF SUBJECT MATTER
INV. E21B43/08 B01D29/46
ADD.

According to International Patent Classification (IPC) or to both national classification and IPC

B. FIELDS SEARCHED

Minimum documentation searched (classification system followed by classification symbols)
E21B B01D

Documentation searched other than minimum documentation to the extent that such documents are included in the fields searched

Electronic data base consulted during the international search (name of data base and, where practicable, search terms used)

EPO-Internal, WPI Data

C. DOCUMENTS CONSIDERED TO BE RELEVANT

Category*	Citation of document, with indication, where appropriate, of the relevant passages	Relevant to claim No.
X	US 2012/125601 A1 (MUESSIG SIEGFRIED [DE] ET AL) 24 May 2012 (2012-05-24) paragraph [0037] - paragraph [0094]; figures 1-4	1,4-17
X	US 2017/254185 A1 (LANGE DIETRICH [DE] ET AL) 7 September 2017 (2017-09-07) the whole document	1-4,10, 11,15-17
X	US 2012/018146 A1 (WILDHACK STEFANIE [DE] ET AL) 26 January 2012 (2012-01-26) paragraph [0054] - paragraph [0140]; figures 1-7	1,4,5,7, 10,11, 15-17
X	US 2011/220347 A1 (KAYSER ARMIN [DE]) 15 September 2011 (2011-09-15) paragraph [0025] - paragraph [0066]; figures 1-5	1,4,5,7, 10,15,17

☐ Further documents are listed in the continuation of Box C. ☒ See patent family annex.

* Special categories of cited documents :

"A" document defining the general state of the art which is not considered to be of particular relevance

"E" earlier application or patent but published on or after the international filing date

"L" document which may throw doubts on priority claim(s) or which is cited to establish the publication date of another citation or other special reason (as specified)

"O" document referring to an oral disclosure, use, exhibition or other means

"P" document published prior to the international filing date but later than the priority date claimed

"T" later document published after the international filing date or priority date and not in conflict with the application but cited to understand the principle or theory underlying the invention

"X" document of particular relevance; the claimed invention cannot be considered novel or cannot be considered to involve an inventive step when the document is taken alone

"Y" document of particular relevance; the claimed invention cannot be considered to involve an inventive step when the document is combined with one or more other such documents, such combination being obvious to a person skilled in the art

"&" document member of the same patent family

Date of the actual completion of the international search	Date of mailing of the international search report
2 March 2020	09/03/2020

Name and mailing address of the ISA/	Authorized officer
European Patent Office, P.B. 5818 Patentlaan 2 NL - 2280 HV Rijswijk Tel. (+31-70) 340-2040, Fax: (+31-70) 340-3016	Hennion, Dmitri

INTERNATIONAL SEARCH REPORT

Information on patent family members

International application No
PCT/IB2019/060577

Patent document cited in search report	Publication date	Patent family member(s)	Publication date
US 2012125601 A1	24-05-2012	AU 2009350223 A1	08-12-2011
		BR 112012001485 A2	08-11-2016
		CA 2761686 A1	27-01-2011
		CN 102639205 A	15-08-2012
		DK 2456531 T3	18-11-2013
		DK 2662124 T3	13-02-2017
		EA 201171223 A1	30-04-2012
		EP 2456531 A1	30-05-2012
		EP 2662124 A1	13-11-2013
		ES 2435892 T3	26-12-2013
		ES 2614718 T3	01-06-2017
		US 2012125601 A1	24-05-2012
		WO 2011009469 A1	27-01-2011
US 2017254185 A1	07-09-2017	AU 2015296866 A1	16-02-2017
		BR 112017001857 A2	21-11-2017
		CA 2956483 A1	04-02-2016
		CN 106574494 A	19-04-2017
		DK 2980348 T3	02-10-2017
		EP 2980348 A1	03-02-2016
		ES 2640477 T3	03-11-2017
		RU 2645393 C1	21-02-2018
		US 2017254185 A1	07-09-2017
		WO 2016018821 A1	04-02-2016
US 2012018146 A1	26-01-2012	AU 2010350079 A1	18-10-2012
		BR 112012024771 A2	07-06-2016
		CA 2738171 A1	30-09-2011
		CN 102822444 A	12-12-2012
		DK 2553216 T3	03-03-2014
		EA 201290987 A1	29-03-2013
		EP 2553216 A1	06-02-2013
		ES 2462116 T3	22-05-2014
		US 2012018146 A1	26-01-2012
		WO 2011120539 A1	06-10-2011
US 2011220347 A1	15-09-2011	CN 102216558 A	12-10-2011
		DE 102008057894 A1	02-06-2010
		EA 201170707 A1	31-10-2011
		EP 2347092 A1	27-07-2011
		US 2011220347 A1	15-09-2011
		WO 2010057591 A1	27-05-2010