(12) INTERNATIONAL APPLICATION PUBLISHED UNDER THE PATENT COOPERATION TREATY (PCT)

(19) World Intellectual Property Organization
International Bureau

(43) International Publication Date
30 July 2020 (30.07.2020)

WIPO | PCT

(10) International Publication Number
WO 2020/154163 A1

(51) International Patent Classification:
B29C 64/106 (2017.01) *B33Y 10/00* (2015.01)
B29C 64/209 (2017.01) *B33Y 30/00* (2015.01)
B29C 64/393 (2017.01) *B33Y 50/02* (2015.01)
B29C 70/38 (2006.01) *B29C 64/295* (2017.01)

(21) International Application Number:
PCT/US2020/013838

(22) International Filing Date:
16 January 2020 (16.01.2020)

(25) Filing Language: English

(26) Publication Language: English

(30) Priority Data:
62/797,078 25 January 2019 (25.01.2019) US
16/739,891 10 January 2020 (10.01.2020) US

(71) Applicant: **CONTINUOUS COMPOSITES INC.** [US/US]; 215 East Lakeside Ave., Coeur d'Alene, Idaho 83814 (US).

(72) Inventor: **BUDGE, Trevor David**; 1028 E. Boyd Ave., Coeur d'Alene, Idaho 83814 (US).

(74) Agent: **STOCKETT, Ryan C.**; 215 East Lakeside Ave., Coeur d'Alene, Idaho 83814 (US).

(81) Designated States *(unless otherwise indicated, for every kind of national protection available)*: AE, AG, AL, AM, AO, AT, AU, AZ, BA, BB, BG, BH, BN, BR, BW, BY, BZ, CA, CH, CL, CN, CO, CR, CU, CZ, DE, DJ, DK, DM, DO, DZ, EC, EE, EG, ES, FI, GB, GD, GE, GH, GM, GT, HN, HR, HU, ID, IL, IN, IR, IS, JO, JP, KE, KG, KH, KN, KP, KR, KW, KZ, LA, LC, LK, LR, LS, LU, LY, MA, MD, ME, MG, MK, MN, MW, MX, MY, MZ, NA, NG, NI, NO, NZ, OM, PA, PE, PG, PH, PL, PT, QA, RO, RS, RU, RW, SA, SC, SD, SE, SG, SK, SL, ST, SV, SY, TH, TJ, TM, TN, TR, TT, TZ, UA, UG, US, UZ, VC, VN, WS, ZA, ZM, ZW.

(84) Designated States *(unless otherwise indicated, for every kind of regional protection available)*: ARIPO (BW, GH, GM, KE, LR, LS, MW, MZ, NA, RW, SD, SL, ST, SZ, TZ, UG, ZM, ZW), Eurasian (AM, AZ, BY, KG, KZ, RU, TJ, TM), European (AL, AT, BE, BG, CH, CY, CZ, DE, DK, EE, ES, FI, FR, GB, GR, HR, HU, IE, IS, IT, LT, LU, LV, MC, MK, MT, NL, NO, PL, PT, RO, RS, SE, SI, SK, SM, TR), OAPI (BF, BJ, CF, CG, CI, CM, GA, GN, GQ, GW, KM, ML, MR, NE, SN, TD, TG).

Declarations under Rule 4.17:
— *as to applicant's entitlement to apply for and be granted a patent (Rule 4.17(ii))*

(54) Title: SYSTEM FOR ADDITIVELY MANUFACTURING COMPOSITE STRUCTURE

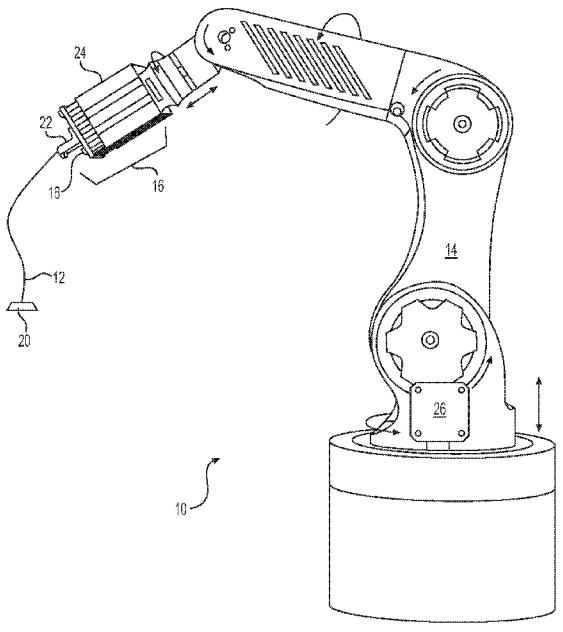

FIG. 1

(57) Abstract: A system (10) for additively manufacturing a composite structure (12) is disclosed. The system may include a support (14), and a print head (16) operatively connected to and moveable by the support. The print head may be configured to discharge a continuous reinforcement that is at least partially coated in a liquid matrix. The system may also include a cure enhancer (18) connected to the print head and configured to expose the discharge to cure energy to cause the liquid matrix to at least partially polymerize, and a controller (22) in communication with the heater and the cure enhancer. The controller may be configured to selectively activate the heater and the cure enhancer.

WO 2020/154163 A1

[Continued on next page]

Published:
— *with international search report (Art. 21(3))*

Description

SYSTEM FOR ADDITIVELY MANUFACTURING COMPOSITE STRUCTURE

Related Application

[0001] This application is based on and claims the benefit of priority from United States Provisional Application No. 62/797,078 that was filed on January 25, 2019, the contents of which are expressly incorporated herein by reference.

Technical Field

[0002] The present disclosure relates generally to a manufacturing system and, more particularly, to a system for additively manufacturing composite structures.

Background

[0003] Continuous fiber 3D printing (a.k.a., CF3D®) involves the use of continuous fibers embedded within a matrix discharging from a moveable print head. The matrix can be a traditional thermoplastic, a powdered metal, a liquid resin (e.g., a UV curable and/or two-part resin), or a combination of any of these and other known matrixes. Upon exiting the print head, a head-mounted cure enhancer (e.g., a UV light, an ultrasonic emitter, a heat source, a catalyst supply, etc.) is activated to initiate and/or complete curing of the matrix. This curing occurs almost immediately, allowing for unsupported structures to be fabricated in free space. When fibers, particularly continuous fibers, are embedded within the structure, a strength of the structure may be multiplied beyond the matrix-dependent strength. An example of this technology is disclosed in U.S. Patent 9,511,543 that issued to Tyler on December 6, 2016 ("the '543 patent").

[0004] Although CF3D® provides for increased strength, compared to manufacturing processes that do not utilize continuous fiber reinforcement, improvements can be made to the structure and/or operation of existing systems. For example, Applicant has found that conditioning the matrix prior to discharge can improve the fabrication process and enhance properties of the resulting structure. The disclosed additive manufacturing system is uniquely configured to provide these improvements and/or to address other issues of the prior art.

Summary

[0005] In one aspect, the present disclosure is directed to a system for additively manufacturing a composite structure. The system may include a support, and a print head operatively connected to and moveable by the support. The print head may be configured to discharge a continuous reinforcement that is at least partially coated in a liquid matrix. The system may also include a cure enhancer connected to the print head and configured to expose the discharge to cure energy to cause the, and a controller in communication with the heater and the cure enhancer. The controller may be configured to selectively activate the heater and the cure enhancer.

[0006] In another aspect, the present disclosure is directed to a method of additively manufacturing a composite structure. The method may include receiving a liquid matrix into a print head, receiving a continuous reinforcement into the print head, and at least . The method may also include selectively discharging the continuous reinforcement and the liquid matrix only when a temperature of the liquid matrix is within a desired range.

[0007] In yet another aspect, the present disclosure is directed to another method of additively manufacturing a composite structure. This method may include receiving a liquid matrix into a print head, receiving a continuous reinforcement into the print head, and at least partially coating the continuous reinforcement with the liquid matrix inside of the print head. The method may also include monitoring a temperature of the liquid matrix inside of the print head, and responsively adjusting the temperature of the liquid matrix. The method may further include selectively discharging the continuous reinforcement and the liquid matrix when a temperature of the liquid matrix is within a desired range, and exposing the liquid matrix after discharge.

Brief Description of the Drawings

[0008] Fig. 1 is a diagrammatic illustration of an exemplary disclosed additive manufacturing system;

[0009] Fig. 2 is an enlarged isometric illustration of an exemplary disclosed portion of the additive manufacturing system of Fig. 1; and

[0010] Fig. 3 is a flowchart depicting an exemplary disclosed method that may be performed by the additive manufacturing system of Fig. 1.

Detailed Description

[0011] Fig. 1 illustrates an exemplary system 10, which may be used to manufacture a composite structure 12 having any desired shape. System 10 may include a support 14 and deposition head ("head") 16. Head 16 may be coupled to and moved by support 14. In the disclosed embodiment of Fig. 1, support 14 is a robotic arm capable of moving head 16 in multiple directions during fabrication of structure 12. Support 14 may alternatively embody a gantry (e.g., an overhead bridge or single-post gantry) or a hybrid gantry/arm also capable of moving head 16 in multiple directions during fabrication of structure 12. Although support 14 is shown as being capable of 6-axis movements, it is contemplated that support 14 may be capable of moving head 16 in a different manner (e.g., along or around a greater or lesser number of axes). In some embodiments, a drive may mechanically couple head 16 to support 14, and include components that cooperate to move portions of and/or supply power or materials to head 16.

[0012] Head 16 may be configured to receive or otherwise contain a matrix (shown as **M** in Fig. 2). The matrix may include any type of material (e.g., a liquid resin, such as a zero-volatile organic compound resin, a powdered metal, etc.) that is curable. Exemplary resins include thermosets, single- or multi-part epoxy resins, polyester resins, cationic epoxies, acrylated epoxies, urethanes, esters, thermoplastics, photopolymers, polyepoxides, thiols, alkenes, thiol-enes, and more. In one embodiment, the matrix inside head 16 may be pressurized (e.g., negatively and/or positively), for example by an external device (e.g., by an extruder, a pump, etc. - not shown) that is fluidly connected to head 16 via a corresponding conduit (not shown). In another embodiment, however, the pressure may be generated completely inside of head 16 by a similar type of device. In yet other embodiments, the matrix may be gravity-fed into and/or through head 16. For example, the matrix may be fed into head 16, and pushed or pulled out of head 16 along with one or more continuous reinforcements (shown as **R** in Fig. 2). In some instances, the matrix inside head 16 may need to be kept cool and/or dark in order to inhibit premature curing or otherwise obtain a desired rate of curing after discharge. In other instances, the matrix may need to be kept warm and/or illuminated for similar reasons. In either situation, head 16 may be specially configured (e.g., insulated, temperature-controlled, shielded, etc.) to provide for these needs.

[0013] The matrix may be used to at least partially coat any number of continuous reinforcements (e.g., separate fibers, tows, rovings, socks, and/or sheets of continuous material) and, together with the reinforcements, make up a portion (e.g., a wall) of composite structure 12. The reinforcements may be stored within or otherwise passed through head 16. When multiple reinforcements are simultaneously used, the reinforcements may be of the same material composition and have the same sizing and cross-sectional shape (e.g., circular, square, rectangular, etc.), or a different material composition with different sizing and/or cross-sectional shapes. The reinforcements may include, for example, carbon fibers, vegetable fibers, wood fibers, mineral fibers, glass fibers, plastic fibers, metallic wires, optical tubes, etc. It should be noted that the term "reinforcement" is meant to encompass both structural and non-structural (e.g., functional) types of continuous materials that are at least partially encased in the matrix discharging from head 16.

[0014] The reinforcements may be exposed to (e.g., at least partially coated with) the matrix while the reinforcements are inside head 16, while the reinforcements are being passed to head 16, and/or while the reinforcements are discharging from head 16. The matrix, dry (e.g., unimpregnated) reinforcements, and/or reinforcements that are already exposed to the matrix (e.g., pre-impregnated reinforcements) may be transported into head 16 in any manner apparent to one skilled in the art. In some embodiments, a filler material (e.g., chopped fibers, nano particles or tubes, etc.) may be mixed with the matrix before and/or after the matrix coats the continuous reinforcements.

[0015] One or more cure enhancers (e.g., a UV light, an ultrasonic emitter, a laser, a heater, a catalyst dispenser, etc.) 18 may be mounted proximate (e.g., within, on, and/or adjacent) head 16 and configured to enhance a cure rate and/or quality of the matrix as it is discharged from head 16. Cure enhancer 18 may be controlled to selectively expose portions of structure 12 to energy (e.g., UV light, electromagnetic radiation, vibrations, heat, a chemical catalyst, etc.) during material discharge and the formation of structure 12. The energy may trigger a chemical reaction to occur within the matrix, increase a rate of the chemical reaction, sinter the matrix, harden the matrix, solidify the matrix, polymerize the matrix, or otherwise cause the matrix to cure as it discharges from head 16. The amount of energy produced by cure enhancer 18 may be sufficient to cure the matrix before structure 12 axially grows more than a predetermined length away from

head 16. In one embodiment, structure 12 is completely cured before the axial growth length becomes equal to an external diameter of the matrix-coated reinforcement.

[0016] The matrix and/or reinforcement may be discharged from head 16 via at least two different modes of operation. In a first mode of operation, the matrix and/or reinforcement are extruded (e.g., pushed under pressure and/or mechanical force) from head 16 as head 16 is moved by support 14 to create features of structure 12. In a second mode of operation, at least the reinforcement is pulled from head 16, such that a tensile stress is created in the reinforcement during discharge. In this mode of operation, the matrix may cling to the reinforcement and thereby also be pulled from head 16 along with the reinforcement, and/or the matrix may be discharged from head 16 under pressure along with the pulled reinforcement. In the second mode of operation, where the matrix is being pulled from head 16 with the reinforcement, the resulting tension in the reinforcement may increase a strength of structure 12 (e.g., by aligning the reinforcements, inhibiting buckling, etc.) after curing of the matrix, while also allowing for a greater length of unsupported structure 12 to have a straighter trajectory. That is, the tension in the reinforcement remaining after curing of the matrix may act against the force of gravity (e.g., directly and/or indirectly by creating moments that oppose gravity) to provide support for structure 12.

[0017] The reinforcement may be pulled from head 16 as a result of head 16 being moved by support 14 away from an anchor point 20. In particular, at the start of structure formation, a length of matrix-impregnated reinforcement may be pulled and/or pushed from head 16, deposited onto anchor point 20, and cured, such that the discharged material adheres (or is otherwise coupled) to anchor point 20. Thereafter, head 16 may be moved away from anchor point 20, and the relative movement may cause the reinforcement to be pulled from head 16. It should be noted that the movement of reinforcement through head 16 could be assisted via internal feed mechanisms, if desired. However, the discharge rate of reinforcement from head 16 may primarily be the result of relative movement between head 16 and anchor point 20, such that tension is created within the reinforcement. As discussed above, anchor point 20 could be moved away from head 16 instead of or in addition to head 16 being moved away from anchor point 20.

[0018] As can be seen in Fig. 1, head 16 may include, among other things, an outlet 22 and a matrix reservoir 24 located upstream of outlet 22. In this example, outlet 22 is a single-channel nozzle configured to discharge composite material having a generally circular, tubular, or

rectangular cross-section. The configuration of head 16, however, may allow outlet 22 to be swapped out for another outlet (not shown) that discharges composite material having a different shape (e.g., a flat or sheet-like cross-section, a multi-track cross-section, etc.). Fibers, tubes, and/or other reinforcements may pass through matrix reservoir 24 and be wetted (e.g., at least partially coated and/or fully saturated) with matrix prior to discharge.

[0019] A controller 26 may be provided and communicatively coupled with support 14 and head 16. Each controller 26 may embody a single processor or multiple processors that are programmed and/or otherwise configured to control an operation of system 10. Controller 26 may include one or more general or special purpose processors or microprocessors. Controller 26 may further include or be associated with a memory for storing data such as, for example, design limits, performance characteristics, operational instructions, tool paths, and corresponding parameters of each component of system 10. Various other known circuits may be associated with controller 26, including power supply circuitry, signal-conditioning circuitry, solenoid driver circuitry, communication circuitry, and other appropriate circuitry. Moreover, controller 26 may be capable of communicating with other components of system 10 via wired and/or wireless transmission.

[0020] One or more maps may be stored in the memory of controller 26 and used during fabrication of structure 12. Each of these maps may include a collection of data in the form of lookup tables, graphs, and/or equations. In the disclosed embodiment, the maps may be used by controller 26 to determine the movements of head 16 required to produce desired geometry (e.g., size, shape, material composition, performance parameters, and/or contour) of structure 12, and to regulate operation of cure enhancer(s) 18 and/or other related components in coordination with the movements.

[0021] It has been found that the material discharged by head 16 may have characteristics, which are at least partially dependent on how the material is processed by head 16. For example, a glass transition temperature (Tg) of the material can be affected by a temperature achieved prior to discharge and/or during curing subsequent to discharge from outlet 22. In particular, a higher temperature achieved within the matrix during curing generally results in a higher Tg of the finished structure 12. Accordingly, it may be beneficial to selectively increase the matrix temperature to a level higher than can be achieved solely via cure enhancer(s) 20 and/or resulting normally from chemical reactions occurring within the matrix. Care must be taken, however, to

avoid premature curing (e.g., curing prior to discharge from outlet 22) caused by the elevated temperatures and to ensure consistent and even heating throughout the matrix.

[0022] It has also been found that preheating the matrix (i.e., heating the matrix to an elevated temperature just below a cure initiation temperature at which molecules begin to cross-bond with each other) may reduce an amount of energy exposure required outside of head 16 to initiate and/or complete through-curing of the matrix. This may be particularly helpful, for example, in applications where it is difficult to fully penetrate the reinforcements (e.g., opaque reinforcements such as carbon) with the cure energy.

[0023] In the embodiment of Fig. 2, the matrix within reservoir 24 or otherwise passing through head 16 may be selectively preheated prior to discharge, so as to increase the temperature achieved inside the matrix during curing. The preheating may be facilitated by way of a heater 40. In the disclosed example, heater 40 is an electric coil placed in a vicinity of head 16 (e.g., wrapped around matrix reservoir 24 and/or outlet 22). It is contemplated, however, that heater 40 could alternatively be placed inside of head 16 or at some location upstream of head 16. For example, heater 40 could embody a cartridge heater embedded within a wall of matrix reservoir 24 and/or outlet 22, or an electrode heater in direct fluid contact with the matrix (e.g., inside of reservoir 24). Other heater configurations are also contemplated.

[0024] Heater 40 may be regulated (e.g., selectively energized by controller 26) to increase the temperature of the matrix inside head 16 to about 80-95% of a threshold temperature that initiates or otherwise causes curing of the matrix (e.g., the "kick-off" temperature). With this preheating, cure enhancers 18 may more easily trigger cure initiation after discharge (e.g., via additional direct heating and/or via UV reactions that cause further heating), and the matrix temperature achieved during the reaction may be higher than otherwise possible. It is contemplated that the kickoff temperature of a particular matrix could be selectively lowered (e.g., via one or more thermal initiators), in addition to preheating the matrix, such that an even lower level of energy exposure from cure enhancer(s) 18 may be required.

[0025] In the embodiment of Fig. 2, one or more portions of head 16 may be provided with an insulating jacket 42. Jacket 42 may embody any type of insulating layer or material applied to any portion of head 16, with the primary purpose being to reduce heat transfer with (e.g., loss to) the environment (and/or other portions of head 16) and thereby facilitate greater accuracy in matrix temperature control. It is contemplated that a sensor 44 could be associated with reservoir

24, if desired, and used to provide feedback control signals associated with the matrix temperature. Controller 26 may be configured to receive these signals and responsively adjust current levels passing through heater 40 alone and/or in combination with adjustments to operation of cure enhancer(s) 18.

[0026] Fig. 3 is a flowchart depicting an exemplary method that may be implemented by system 10 and regulated by controller 26 during fabrication of structure 12. Fig. 3 will be discussed in more detail in the following section to further illustrate the disclosed concepts.

Industrial Applicability

[0027] The disclosed system may be used to manufacture composite structures having any desired cross-sectional shape and length. The composite structures may include any number of different fibers of the same or different types and of the same or different diameters, and any number of different matrixes of the same or different makeup. Operation of system 10 will now be described in detail.

[0028] At a start of a manufacturing event, information regarding a desired structure 12 may be loaded into system 10 (e.g., into controller 26 that is responsible for regulating operations of support 14 and/or head 16) (Step 300). This information may include, among other things, a size (e.g., diameter, wall thickness, length, etc.), a contour (e.g., a trajectory), surface features (e.g., ridge size, location, thickness, length; flange size, location, thickness, length; etc.), connection geometry (e.g., locations and sizes of couplings, tees, splices, etc.), reinforcement selection, matrix selection, etc. It should be noted that this information may alternatively or additionally be loaded into system 10 at different times and/or continuously during the manufacturing event, if desired. Based on the component information, one or more different reinforcements and/or matrix materials may be installed and/or continuously supplied into system 10.

[0029] To install the reinforcements, individual fibers, tows, and/or ribbons may be passed through matrix reservoir 24 and outlet 22. In some embodiments, the reinforcements may also need to be connected to a pulling machine (not shown) and/or to a mounting fixture (e.g., to anchor point 20). Installation of the matrix material may include filling head 16 (e.g., reservoir 24) and/or coupling of an extruder (not shown) to head 16.

[0030] At the same time as or after completion of Step 300, controller 26 (or a software module that forms a portion of system 10) may receive and/or determine operational properties of the

selected matrix (Step 310). These properties may include, among other things, a desired glass transition temperature for structure 12 and/or a temperature that should be achieved within head 16 via heater 40 alone and/or a temperature achieved during curing via a combination of heater 40 and cure enhancer(s) 18 that will produce the desired glass transition temperature. These properties may be stored, for example, within the memory of controller 26 as one or more relationship maps that can be referenced by controller 26 during operation of system 10.

[0031] After completion of Steps 300 and 310, controller 26 may monitor a temperature of the matrix (Step 320), and determine if the temperature is within a desired range suitable for material discharge from head 16 (Step 330). This temperature may include the temperature of matrix within head 16 induced by heater 40 alone or a maximum temperature of the matrix achieved via energy received from both heater 40 and cure enhancer(s) 18. In one embodiment, the temperature of the matrix may be determined, at least in part, based on signals generated by sensor 44. For example, the temperature may correspond directly to the signals. Alternatively, the temperature may correspond to an amount of energy exposure from heater 40 and/or cure enhancer(s) 18, as indicated by levels of current supplied to these devices and regulated by controller 26.

[0032] When the temperature is within the desired range (Step 330: Y), controller 26 may initiate discharge of material from head 16 and the fabrication of structure 12 (Step 340). For example, the reinforcements may be pulled and/or pushed along with the matrix material from head 16. Support 14 may also selectively move head 16 and/or anchor point 20 in a desired manner, such that an axis of the resulting structure 12 follows a desired three-dimensional trajectory.

[0033] However, when controller 26 determines at Step 330 that the temperature of the matrix is not within the desired range (Step 330: N), controller 26 may selectively adjust operation of heater 40 and/or cure enhancer(s) 18 to bring the matrix temperature into the desired range (Step 350). The desired range may include, for example about (e.g., within engineering tolerances) 80-95% of the kickoff temperature (e.g., the temperature at which self-supported curing occurs) of the matrix. Control may then return to Step 320.

[0034] Controller 26 may periodically or continuously monitor and selectively adjust the matrix temperature during fabrication of structure 12. Once structure 12 has grown to a desired length, structure 12 may be severed from system 10.

[0035] It will be apparent to those skilled in the art that various modifications and variations can be made to the disclosed system. Other embodiments will be apparent to those skilled in the art from consideration of the specification and practice of the disclosed system. It is intended that the specification and examples be considered as exemplary only, with a true scope being indicated by the following claims and their equivalents.

Claims

What is claimed is:

1. An additive manufacturing system (10), comprising:

a support (14);

a print head (16) operatively connected to and moveable by the support, the print head configured to discharge a continuous reinforcement (R) that is at least partially coated in a liquid matrix (M);

a cure enhancer (18) connected to the print head and configured to expose the discharge to cure energy to cause the liquid matrix to at least partially polymerize;

a heater (40) configured to warm the liquid matrix inside of the print head; and

a controller (22) in communication with the heater and the cure enhancer, the controller being configured to selectively activate the heater and the cure enhancer.

2. The additive manufacturing system of claim 1, wherein the controller is configured to selectively activate at least one of the heater and the cure enhancer based on a desired glass transition temperature of the liquid matrix within a fabricated structure.

3. The additive manufacturing system of claim 2, further including a sensor (44) configured to generate a signal indicative of a temperature of the liquid matrix inside of the print head, wherein the controller is configured to activate the at least one of the heater and the cure enhancer based on the signal.

4. The additive manufacturing system of claim 1, further including an insulating jacket (42) associated with the print head to reduce heat loss from the liquid matrix.

5. The additive manufacturing system of claim 3, wherein the controller is configured to cause the print head to discharge material only when the signal indicates an internal temperature of the liquid matrix within a desired range.

6. A method of additively manufacturing a composite structure (12), comprising:

receiving a liquid matrix (M) into a print head (16);

receiving a continuous reinforcement (R) into the print head;

at least partially coating the continuous reinforcement with the liquid matrix inside of the print head; and

selectively discharging the continuous reinforcement and the liquid matrix only when a temperature of the liquid matrix is within a desired range.

7. The method of claim 6, further including generating a signal indicative of the temperature of the liquid matrix, wherein selectively discharging the continuous reinforcement and the liquid matrix includes selectively discharging the continuous reinforcement and the liquid matrix only when the signal indicates that the temperature of the liquid matrix is within the desired range.

8. The method of claim 6, further including selectively conditioning the liquid matrix when the temperature of the liquid matrix is outside of the desired range.

9. The method of claim 8, wherein selectively conditioning includes heating the liquid matrix inside of the print head.

10. The method of claim 9, further including exposing the liquid matrix to a cure energy after discharge from the print head.

11. The method of claim 10, wherein selectively conditioning further includes adjusting an amount of energy directed to the liquid matrix after discharge from the print head.

12. The method of claim 9, wherein heating the liquid matrix includes heating the liquid matrix to about 80-95% of a kickoff temperature of the liquid matrix.

13. The method of claim 9, wherein heating the liquid matrix inside of the print head increases a glass transition temperature of the composite structure.

14. The method of claim 6, wherein the desired range is specific to the liquid matrix.

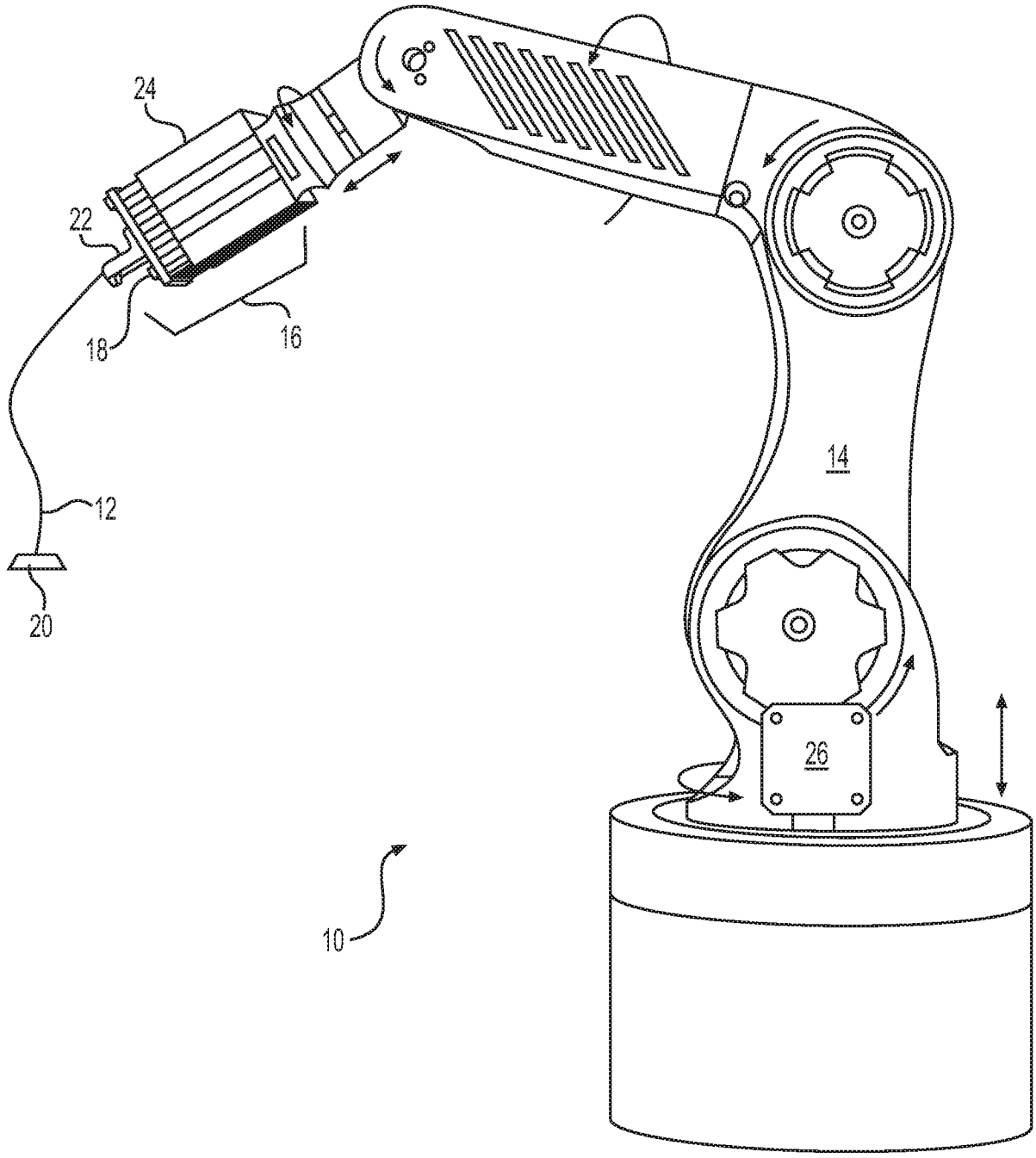

FIG. 1

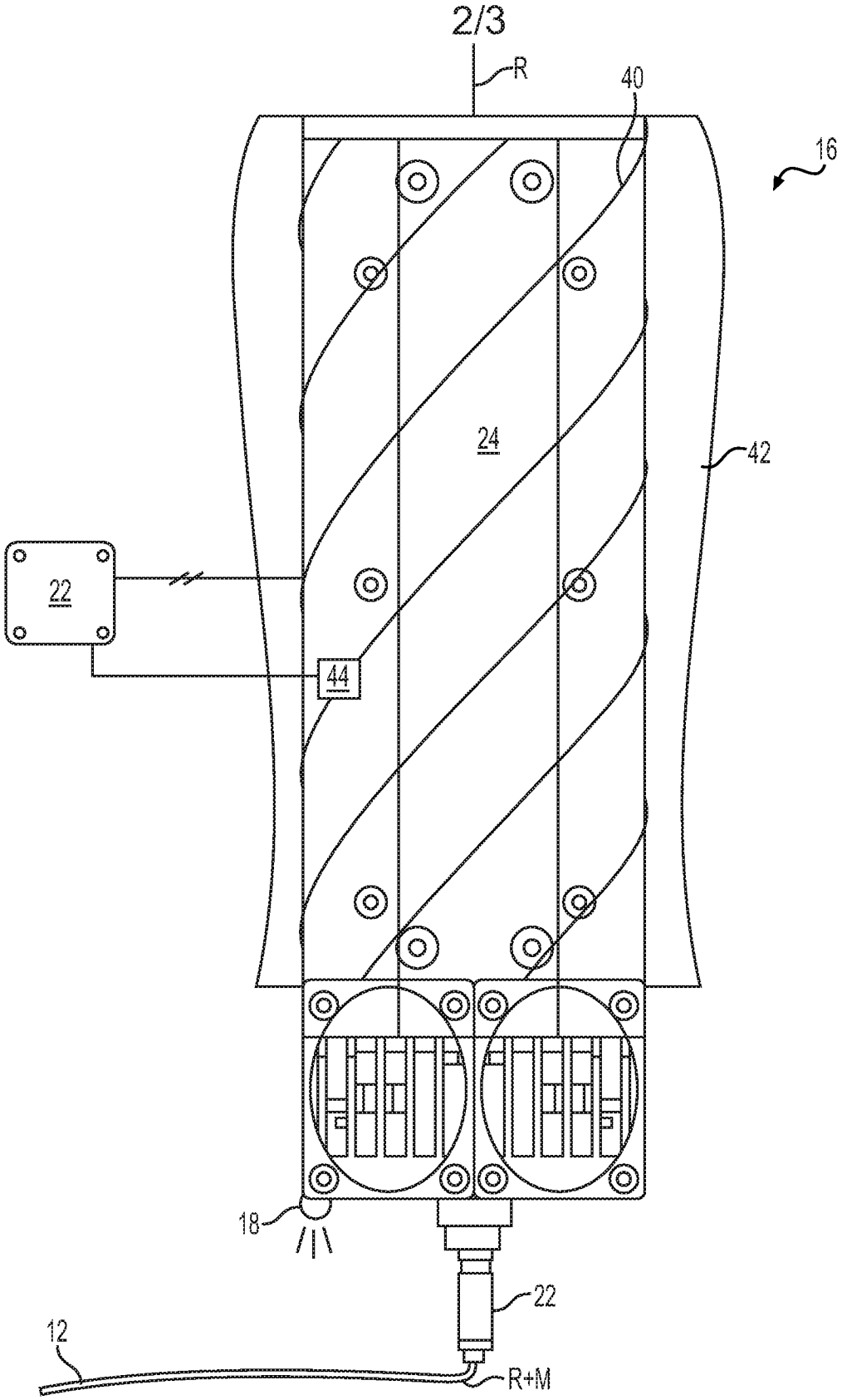

FIG. 2

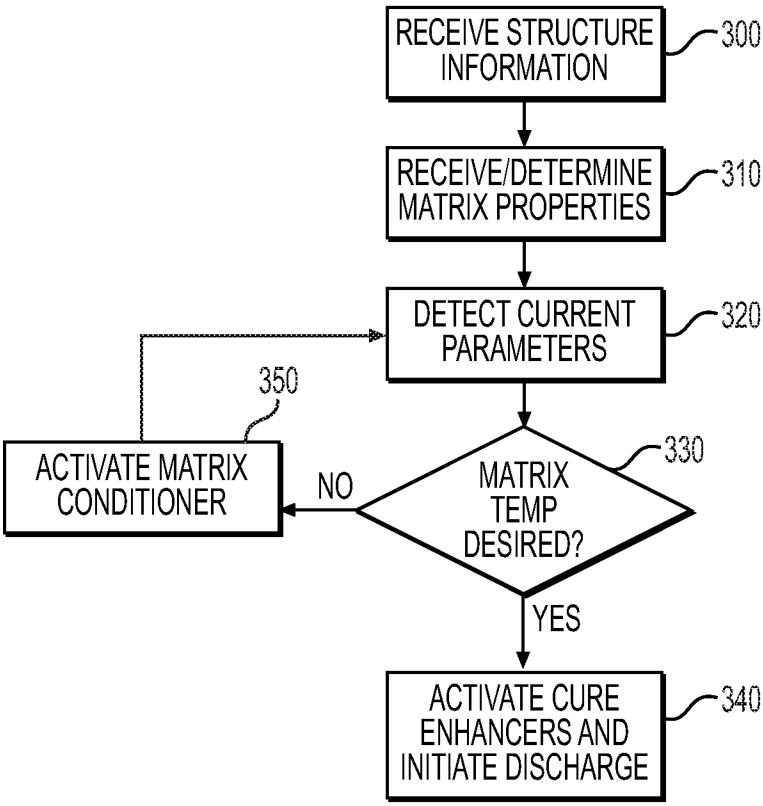
RECEIVE STRUCTURE INFORMATION
300
RECEIVE/DETERMINE MATRIX PROPERTIES
310
DETECT CURRENT PARAMETERS
320
350
ACTIVATE MATRIX CONDITIONER
NO
MATRIX TEMP DESIRED?
330
YES
ACTIVATE CURE ENHANCERS AND INITIATE DISCHARGE
340

FIG. 3

INTERNATIONAL SEARCH REPORT

International application No
PCT/US2020/013838

A. CLASSIFICATION OF SUBJECT MATTER
INV. B29C64/106 B29C64/209 B29C64/393 B29C70/38 B33Y10/00
B33Y30/00 B33Y50/02 B29C64/295
ADD.
According to International Patent Classification (IPC) or to both national classification and IPC

B. FIELDS SEARCHED

Minimum documentation searched (classification system followed by classification symbols)
B29C B33Y

Documentation searched other than minimum documentation to the extent that such documents are included in the fields searched

Electronic data base consulted during the international search (name of data base and, where practicable, search terms used)
EPO-Internal, WPI Data

C. DOCUMENTS CONSIDERED TO BE RELEVANT

Category*	Citation of document, with indication, where appropriate, of the relevant passages	Relevant to claim No.
X	US 2019/009462 A1 (WILENSKI MARK STEWART [US] ET AL) 10 January 2019 (2019-01-10)	1-3,5-14
Y	abstract figures 2,3 paragraph [0021] paragraph [0034] - paragraph [0037] paragraph [0042] - paragraph [0046] paragraph [0071] - paragraph [0072] -----	4
X	US 5 936 861 A (JANG BOR Z [US] ET AL) 10 August 1999 (1999-08-10) abstract figure 2 column 6, line 52 - column 7, line 20 claims 1,17,18 -----	6-10,14

-/--

[X] Further documents are listed in the continuation of Box C.

[X] See patent family annex.

* Special categories of cited documents :

"A" document defining the general state of the art which is not considered to be of particular relevance

"E" earlier application or patent but published on or after the international filing date

"L" document which may throw doubts on priority claim(s) or which is cited to establish the publication date of another citation or other special reason (as specified)

"O" document referring to an oral disclosure, use, exhibition or other means

"P" document published prior to the international filing date but later than the priority date claimed

"T" later document published after the international filing date or priority date and not in conflict with the application but cited to understand the principle or theory underlying the invention

"X" document of particular relevance; the claimed invention cannot be considered novel or cannot be considered to involve an inventive step when the document is taken alone

"Y" document of particular relevance; the claimed invention cannot be considered to involve an inventive step when the document is combined with one or more other such documents, such combination being obvious to a person skilled in the art

"&" document member of the same patent family

Date of the actual completion of the international search	Date of mailing of the international search report
28 April 2020	08/05/2020

Name and mailing address of the ISA/	Authorized officer
European Patent Office, P.B. 5818 Patentlaan 2 NL - 2280 HV Rijswijk Tel. (+31-70) 340-2040, Fax: (+31-70) 340-3016	Lozza, Monica

1

Form PCT/ISA/210 (second sheet) (April 2005)

INTERNATIONAL SEARCH REPORT

International application No
PCT/US2020/013838

C(Continuation). DOCUMENTS CONSIDERED TO BE RELEVANT

Category*	Citation of document, with indication, where appropriate, of the relevant passages	Relevant to claim No.
Y	US 2019/022935 A1 (LEONARDUS VAN TOOREN MICHAEL JOHANNES [US] ET AL) 24 January 2019 (2019-01-24) figure 12 paragraph [0068] - paragraph [0069]	4

1

INTERNATIONAL SEARCH REPORT

Information on patent family members

International application No
PCT/US2020/013838

Patent document cited in search report	Publication date	Patent family member(s)	Publication date
US 2019009462 A1	10-01-2019	CN 109203453 A	15-01-2019
		CN 109203454 A	15-01-2019
		EP 3424687 A1	09-01-2019
		EP 3424708 A1	09-01-2019
		JP 2019031074 A	28-02-2019
		US 2019009462 A1	10-01-2019
US 5936861 A	10-08-1999	NONE	
US 2019022935 A1	24-01-2019	US 2019022935 A1	24-01-2019
		WO 2019023167 A1	31-01-2019