G. O. DE CLARK.

DOUBLE FACED CLOCK.

APPLICATION FILED JULY 23, 1912.

1,068,417. Patented July 29, 1913.

Fig 1

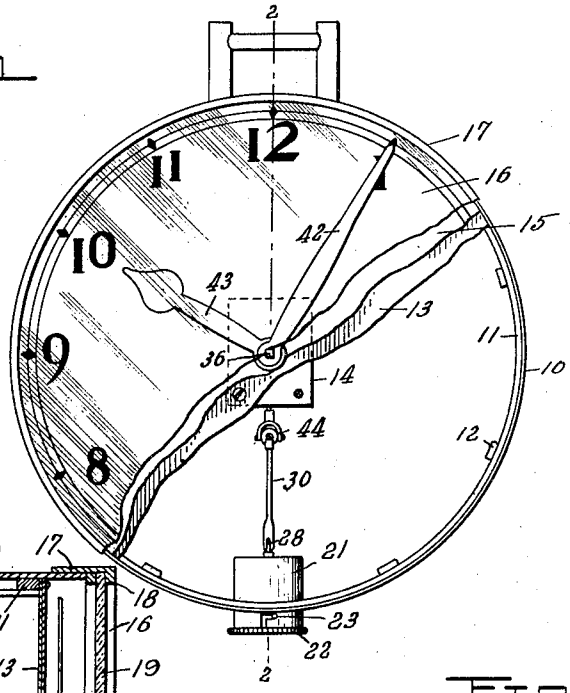

Fig 2

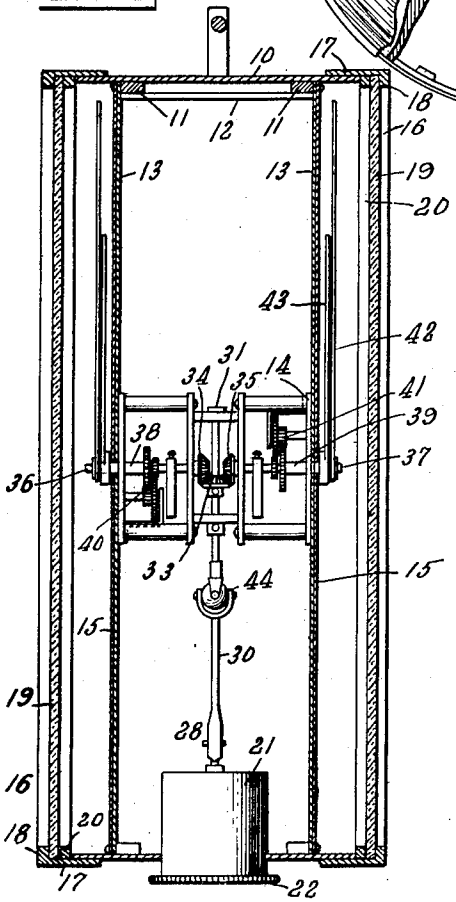

Fig 3

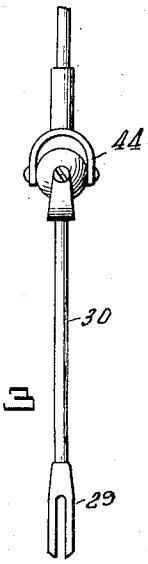

Fig 4

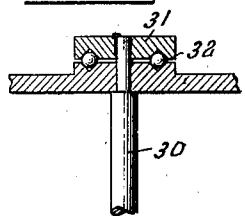

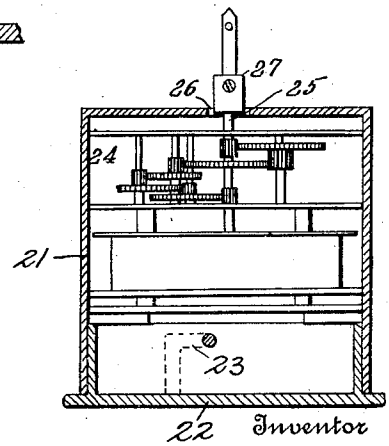

Witnesses

H. A. Robinette

S. P. Hollingsworth

Inventor

George O. DeClark

By Simpson, Cushman & Rea

Attorney

UNITED STATES PATENT OFFICE.

GEORGE O. DE CLARK, OF BROOKLYN, NEW YORK.

DOUBLE-FACED CLOCK.

1,068,417. Specification of Letters Patent. Patented July 29, 1913.

Application filed July 23, 1912. Serial No. 711,128.

To all whom it may concern:

Be it known that I, GEORGE O. DE CLARK, a citizen of the United States, residing at Brooklyn, in the county of Kings and State of New York, have invented new and useful Improvements in Double-Faced Clocks, of which the following is a specification.

This invention relates to clocks, particularly large street or sign clocks having a plurality of faces, designed to be suspended or otherwise upheld by a suitable support, and to contain within itself the entire mechanism for giving motion to the hands. The mechanism may be conveniently divided into two parts, one part comprising the usual train of wheels, means for imparting motion thereto and a regulating device for limiting the speed of rotation of said train of wheels. This part of the mechanism is preferably small and of compact form and, is in fact a small clock movement, removably mounted in the clock frame in such manner as to permit its easy withdrawal when necessary to clean, oil, regulate and repair. The other part of the mechanism includes a set of gear wheels for rotating the hands of each dial mounted in a frame rigidly secured to the clock casing a vertical shaft journaled on anti-friction bearings in said casing driven by the first part of the mechanism to which it is connected by a separable coupling, and bevel gear wheels between said shaft and the aforesaid set of gear wheels for driving them and the hands. The vertical shaft is made flexible by some suitable means, such as a universal joint, whereby any lack of alinement between said shaft and the shaft of the small clock movement to which it is connected will be compensated for, and any interference or interruption in the operation of the mechanism due to incorrect setting or placing of the parts prevented. A clock constructed in this manner is simple, easily cared for and regulated, and not affected by the shocks, vibrations and movements of the case to which a street clock, exposed out of doors, is subjected. These clocks are also relatively inexpensive as all the driving mechanism including the power and the regulating device, with the exception of the hour and minute hand gear wheels, is contained in a small cheap clock movement, mounted in a frame and casing of its own and adapted to be easily connected to and removed from the casing of the large clock.

To more clearly understand the construction and operation of this invention, attention is directed to the following detailed description and claims, and to the accompanying drawing, in which—

Figure 1 is a front elevation of a street clock constructed according to the present invention, a part of the casing being broken away to show its interior construction. Fig. 2 is a vertical central sectional view on the line 2—2 of Fig. 1, enlarged. Fig. 3 is an enlarged detailed view of the connecting shaft for transmitting the motion of the time movement to the hands, showing a separable coupling on one end and a flexible joint in its length. Fig. 4 is a detailed, sectional view of an anti-friction bearing for the upper end of the connecting shaft.

In the drawing, 10 indicates a cylindrical or drum shaped casing here shown as made of thin sheet metal reinforced by two annular ribs 11 bearing against the inner surface of the casing and attached thereto in any suitable manner, said ribs being set a short distance within the ends of the casing as shown in Fig. 2. These ribs are connected and stayed by a number of strips or bars 12 extending from one rib to the other around the casing as shown. Secured by screws or otherwise removably attached to the outer side of each rib 11 is a head 13 formed of a circular plate of sheet metal, to each of which heads is fastened by two opposite sides a frame 14 in which is journaled the shafts for the hour and minute hands. Against the outer face of each head 13 is fastened a dial 15 also made of a thin circular plate fitting closely within the end of the casing. The two dials face in opposite directions, each dial being covered by a glass cap 16 comprising a band or ring 17 fitting closely over the end of the casing and having an inwardly projecting flange 18 on

its outer end against which flange a glass plate 19 bears and is held tightly in position by a ring 20 in contact with the inner face of the glass plate and the inner side of the band 17.

Projecting through an opening in the bottom of the casing 10, and extending both within and without said casing is a cylindrical box-like receptacle 21, its open outer end being provided with a cover or closure 22 adapted to slide into the outer portion of said receptacle and to be locked thereto by a bayonet joint connection 23. Within the receptacle 21 is placed a clock movement 24, one shaft 25 of which projects upwardly through a hole 26 in the top of the receptacle 21 and has attached thereto one end 27 of a separable coupling 28. The opposite end 29 of said coupling is affixed on the lower end of a vertical shaft 30 mounted to rotate in the frame 14, the upper end of said shaft being attached to the rotating member 31 of a ball bearing 32. This bearing greatly reduces the friction of rotation of the shaft and at the same time supports its entire weight thus relieving the clock movement from any downward pressure from said shaft. Secured on the shaft 30 is a beveled gear wheel 33 meshing with two similar gear wheels 34 and 35 affixed on the inner ends of the respective minute hand shafts 36 and 37, surrounding which shafts in the usual manner are the tubular hour hand shafts 38 and 39, between which shafts are the usual gear wheel connections 40 and 41. The hour and minute hand shafts project through the heads 13 and dials 15 and have attached thereto the hands 42 and 43.

The clock movement 24 being easily removable from the clock case 10, it is not always possible when replacing the movement to be assured that its shaft 25 is in exact alinement with the shaft 30 to which it is coupled and which if the latter shaft were rigid, even a slight lack of alinement between the two shafts would interfere with and interrupt the movement of the clock. To overcome this difficulty, a universal joint 44 is inserted at any suitable point in the length of the shaft 30, and by its use, the shafts 25 and 30 although they should be placed at a considerable angle to each other, would transmit the motion of the clock mechanism to the hands without strain or inconvenience.

Large street and sign clocks can be erected on this principle at comparative slight cost, with small, simple and wholly self contained mechanism which may be quickly and easily removed as a unit when any attention is required and returned to place without requiring accurate and careful adjustment of the connecting parts. The whole mechanism being carried behind the dials in the suspended or supported part, any shaking by the wind or otherwise to which the clock is likely to be subjected will have no effect on its time keeping properties.

What I claim is,—

1. A clock of the kind described comprising a casing, and a plurality of dials, a set of hand rotating gears back of each dial mounted on a frame fixed to the casing, and a single vertical shaft operatively connected to said set of gears for rotating the same, said shaft being suspended from said frame by one end, the other end hanging free, a receptacle in the bottom of said casing opening out through the wall thereof, a clock movement adapted to be inserted into and removed from said receptacle and to move or vibrate with the casing, the minute hand shaft of said motor clock extending beyond the frame of the same and adapted to project through a hole in the receptacle into the casing, and a slip joint between the suspended vertical shaft and the minute hand shaft of the motor clock.

2. A clock of the kind described comprising a casing and a plurality of dials, a set of hand rotating gears back of each dial, and a single vertical shaft operatively connected with said sets of gears for rotating the same, said gearing and vertical shaft being wholly supported in the casing of the clock, a receptacle in the bottom of said casing opening outwardly through the wall thereof, a clock movement adapted to be easily inserted into and removed from said receptacle and to move with the casing, the minute hand shaft of said motor clock extending beyond the frame of the same and adapted to project through a hole in the receptacle into the casing, and a universally jointed connection suspended from the vertical hands operating shaft and provided at its lower end with a slip connection to engage the minute hand shaft of the motor clock.

3. A clock of the kind described comprising a casing, and a plurality of dials, a set of hand rotating gears back of each dial, and a single vertical shaft operatively connected with said sets of gears for rotating the same, said gearing and vertical shaft being wholly supported in the casing of the clock, a receptacle in the bottom of said casing opening outwardly through the wall thereof, a miniature clock movement adapted to be easily inserted into and removed from said receptacle and to move with the casing, a closure for the open end of said casing adapted to hold the motor clock in place, the minute hand shaft of which clock projects through a hole in the top wall of the receptacle into the casing, a universally jointed connection suspended from and wholly sustained by the vertical hands op-

erating shaft, and a slip joint between said shaft and the minute hand shaft of the motor clock, said joint adapted to rotate the vertical shaft and readily separate therefrom when the motor clock is removed from the receptacle.

In testimony whereof I have hereunto set my hand in presence of subscribing witnesses.

GEORGE O. DE CLARK.

Witnesses:
HENRY MÜLLER,
FRIEDRICH GANZ,
WILLIAM FR. RAUSCH.