(No Model.) 3 Sheets—Sheet 1.

J. F. KIESWETTER.

CARPET RAVELING MACHINE.

No. 456,147. Patented July 21, 1891.

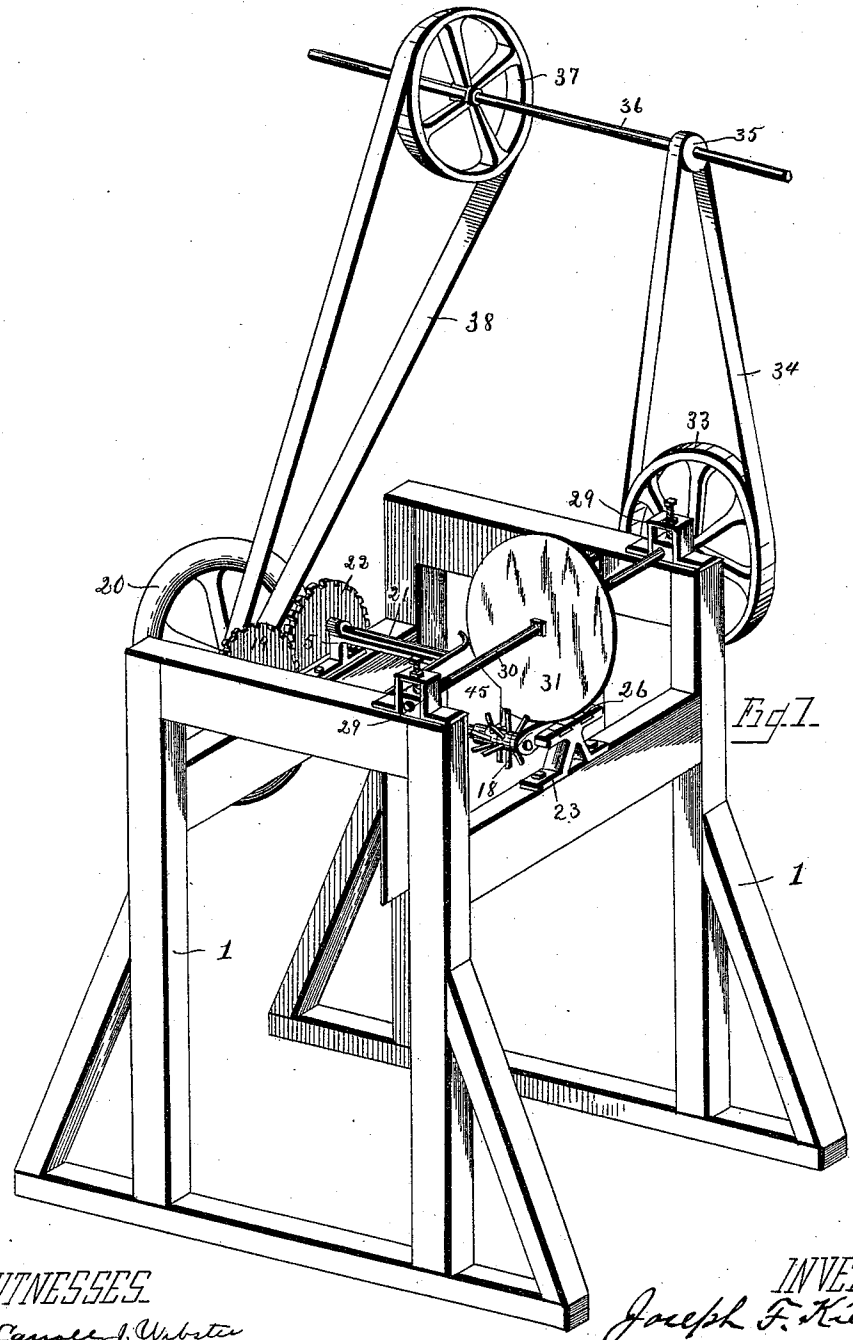

Fig. 1.

WITNESSES.

Carroll J. Webster

R. M. Elliott

INVENTOR.

Joseph F. Kieswetter

By Myers & Webster

Attys

THE NORRIS PETERS CO., PHOTO-LITHO., WASHINGTON, D. C.

(No Model.) 3 Sheets—Sheet 2.

J. F. KIESWETTER.

CARPET RAVELING MACHINE.

No. 456,147. Patented July 21, 1891.

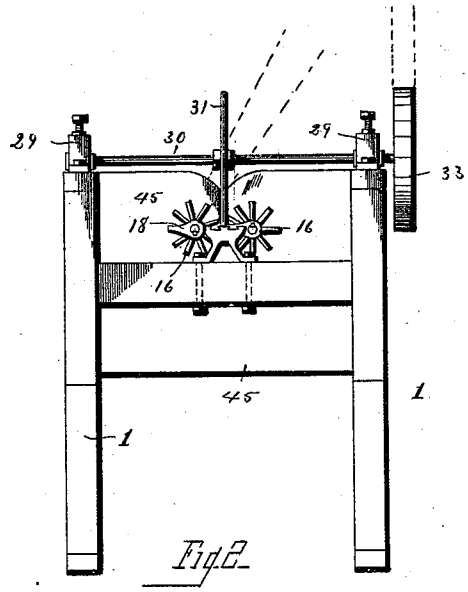

Fig. 2.

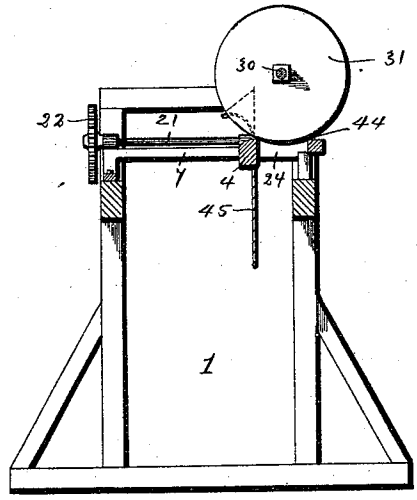

Fig. 7.

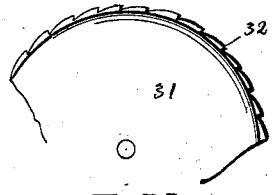

Fig. 10.

WITNESSES.

Carole J. Webster

Robt. C. Smith.

INVENTOR.

Joseph F. Kieswetter

By Myers & Webster

Attys

THE NORRIS PETERS CO., PHOTO-LITHO., WASHINGTON, D. C.

(No Model.) 3 Sheets—Sheet 3.

J. F. KIESWETTER.

CARPET RAVELING MACHINE.

No. 456,147. Patented July 21, 1891.

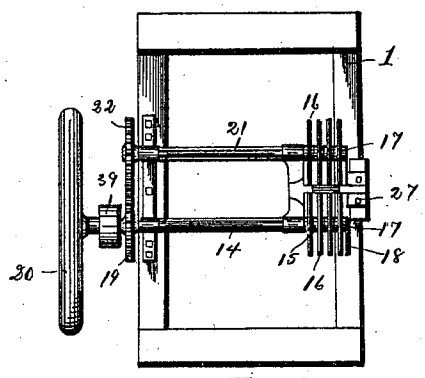

Fig 4.

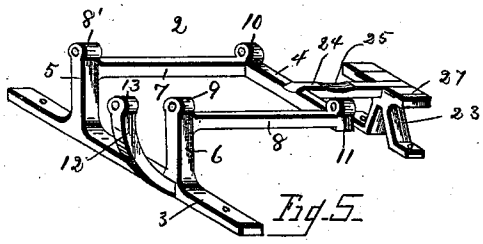

Fig 5.

Fig 6. Fig 7. Fig 8.

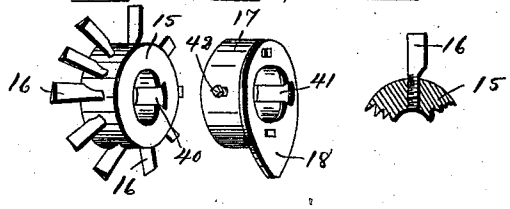

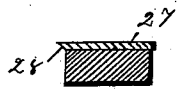

Fig 9.

WITNESSES.

Carroll J. Webster

INVENTOR.

Joseph F. Kieswetter

By Myers & Webster

Attys

THE NORRIS PETERS CO., PHOTO-LITHO., WASHINGTON, D. C.

UNITED STATES PATENT OFFICE.

JOSEPH F. KIESWETTER, OF TOLEDO, OHIO.

CARPET-RAVELING MACHINE.

SPECIFICATION forming part of Letters Patent No. 456,147, dated July 21, 1891.

Application filed September 18, 1890. Serial No. 365,439. (No model.)

To all whom it may concern:

Be it known that I, JOSEPH F. KIESWETTER, of Toledo, in the county of Lucas and State of Ohio, have invented certain new and useful Improvements in Carpet-Raveling Machines; and I do hereby declare that the following is a full, clear, and exact description of the invention, which will enable others skilled in the art to which it appertains to make and use the same, reference being had to the accompanying drawings, and to the figures of reference marked thereon, which form part of this specification.

This invention relates to a carpet-raveling machine.

In the industry in which this machine is designed to be used—namely, that of manufacturing rugs from strips of old or worthless carpet—it has been customary heretofore, after having cut the carpet into strips of desired width, to ravel out the greater part of the warp by hand, thus leaving the filling or woof to form the pile of the rug. Such procedure is necessarily slow and irksome and presents such difficulties that old carpet which might be used advantageously for the above purpose is allowed to go to waste, where otherwise it might be employed in beautifying and adding comfort to a home.

It is the object of the present invention to produce a machine which will rapidly ravel or pick away the desired amount of warp from the filling, thereby leaving the filling in a condition to be manipulated to form the pile. A further object is to produce a machine which shall combine great simplicity of construction with high efficiency and durability in use and cheapness of production.

With these objects in view the invention consists, broadly, in the combination of a series of revoluble knives designed to cut a definite number of warp-threads, a series of fingers adapted to ravel or pick away the severed portions of the warp, and a feed-wheel adapted to move the strips through the machine.

The invention further consists in the various novel details of construction, as will be hereinafter fully described and claimed.

In the accompanying drawings, forming part of this specification, and in which like numerals of reference indicate corresponding parts, I have illustrated one form of device embodying the essential features of my invention, although the same may be carried into effect in other ways without in the least departing from the spirit thereof, and in these drawings—

Figure 1 is a perspective view of my improved raveling-machine. Fig. 2 is a front elevation of the device, showing the knives, fingers, and feed-wheel. Fig. 3 is a side elevation, partly in section, showing more particularly the feed-wheel. Fig. 4 is a top plan view, the feed-wheel being removed, showing the mechanism for operating the ravelers. Fig. 5 is a detail perspective of the supporting-frame for the ravelers and knives. Fig. 6 is a perspective detail view of the collar and fingers carried thereby. Fig. 7 is a similar view of one of the knives. Fig. 8 is a sectional view of a part of one of the collars carrying the fingers, showing the manner of securing the said fingers therein. Fig. 9 is a detail sectional view of one of the stationary blades of the knives; and Fig. 10 is a detail view of a portion of the feed-wheel, showing the configuration of the periphery of the same.

Referring to the drawings, 1 designates the base of the machine, which may be constructed of any suitable material and of any preferred design. Upon the top of the base is secured the operating-mechanism-supporting frame 2, constructed preferably of metal with the parts integral and formed with parallel bases 3 and 4, vertical standards 5 and 6, and transverse rods 7 and 8, connecting with and bracing the said standards and the base 4, which latter carries journal-boxes 10 and 11, arranged in alignment with similar boxes 8′ and 9 on the said standards. From the base 3 extends an upward curved arm 12, the upper end of which carries a journal-box 13, arranged in alignment with the boxes 9 and 11, and in these three boxes is journaled a shaft 14, carrying near its forward end a series of collars 15, bearing fingers 16, and the inner ends of said fingers being cleated, as shown, and adapted to enter a threaded socket in the collar, the fingers having threaded ends for the purpose of adjustment. A collar 17 is arranged upon the forward end of the shaft and bearing a knife 18 and at a point near the opposite end a gear-wheel 19, which occupies the space between the standard 9 and arm 12,

while the end carries a balance-wheel 20, the object of which is to insure uniformity of motion to the mechanism. In the boxes 8′ and 10 is journaled a shaft 21, carrying at its forward end a series of collars bearing the same mechanism as those carried by the shaft 14 and performing the same functions and at the opposite end a gear-wheel 22, designed to mesh with the wheel 19. Arranged to one side of the supporting-frame and secured to the base is the standard 23, which connects with the base 4 by means of a bed-piece 24, having a semicircular groove 25 formed therein. Each side of the bed-piece the standard is provided with dovetailed grooves 26, in which are mounted movable knife-blades 27, the inner edge of each of which is beveled, as shown at 28, so as to form a cutting-edge in conjunction with the knife 18.

Above the raveling mechanism, and mounted within adjustable boxes 29, is a shaft 30, arranged at right angles to shafts 14 and 21 and carrying a feed-wheel 31, arranged between the knives and picker-fingers, the periphery of which wheel is serrated or toothed, as shown at 32, a portion of which periphery works in a groove 25, above referred to. The outer end of the shaft carries a pulley 33, around which passes a belt 34 to a pulley 35 on a shaft 36. This shaft also carries a large pulley 37, around which passes a belt 38 to a pulley 39 on a shaft 14 for operating the knives and fingers. Boxes 29 are adjusted by means of a screw 46, or they may be made automatic by arranging a spring above the same and beneath the combing-bracket.

As shown in Figs. 6 and 7, the collars 15 and 17 are grooved, as shown at 40 and 41, respectively, to engage a spline on the shaft carrying the same, so as to admit of the knives and fingers being adjusted, as desired, and also to facilitate their ready removal, set-screws 42 being employed for securing the parts in their adjusted position. The fingers 16 are also made removable, as shown in Fig. 8, so as to permit of their being removed either for the purpose of sharpening or of replacing a new one for one that is broken or worn out.

Having thus fully described the different parts of my device, I will explain the manner of its operation: The carpet having been cut into strips of desired widths, the operator inserts the end of one of the same under the feed-wheel at 44, and its serrations, by engaging with the carpet, will feed it through the machine, the groove 25 assisting in this feature by preventing the knives or fingers pulling the same to one side or another. The feed-wheel is made to revolve very slowly, while the knives and fingers travel with high velocity. The knives thus cut the warp at short intervals and the fingers pick out the severed threads. As soon as the inner end of the strip passes the fingers it contacts with a shield 45, which guides the finished strip to a receptacle below the mechanism. This shield also prevents the dirt and ravelings falling upon the wheels 19 and 22, which would tend to clog or possibly break them. As stated, the shaft of the feed-wheel is mounted in adjustable boxes, the function of which is to allow the wheel to adjust itself or to be adjusted to various thicknesses of carpet. If desired, the fingers may be made adjustable independently of the collars by means of their threaded ends.

Having thus fully described my invention, what I claim as new, and desire to secure by Letters Patent, is—

1. In a carpet-raveling machine, the combination, with a knife arranged and adapted to sever a definite number of warp-threads, of a series of picker-fingers adapted to ravel or pick away the severed portions of the warp.

2. In a carpet-raveling machine, the combination, with a knife adapted to sever the warp, of a series of fingers adapted to pick the same, and a feed-wheel arranged at right angles to the knife and picker-fingers.

3. The combination, with the revoluble knives, of the revoluble picker-fingers arranged parallel with the knives and in the rear of the same, and a feed-wheel arranged at right angles to the knives and fingers and between the same.

4. The combination, with the revoluble knives, of the revoluble fingers arranged parallel therewith and upon the same shafts, the stationary knives arranged at right angles to the revoluble knives and the feed-wheel arranged parallel with the stationary knives between the same and also between the revoluble knives.

5. The combination, with the revoluble knives, of the revoluble picker-fingers, the stationary knives, the adjustable feed-wheel, and the feed-plate.

In testimony that I claim the foregoing as my own I affix my signature in presence of two witnesses.

JOSEPH F. KIESWETTER.

Witnesses:
WILLIAM WEBSTER,
ROBERT M. ELLIOTT.