# United States Patent [19]

**Miles**

[11] **3,903,562**

[45] **Sept. 9, 1975**


[54] **CAR DRYING APPARATUS**


[76] Inventor: **Garry N. Miles,** 1386 Lawson Ave., West Vancouver, British Columbia, Canada



[22] Filed: **Apr. 16, 1973**

[21] Appl. No.: **351,331**

[52] **U.S. Cl.** ..... **15/301;** 15/306 B; 15/312 R; 15/316 R; 15/326

[51] **Int. Cl.²** ..... **B60S 3/04**

[58] **Field of Search** .. 15/301, 306 R, 306 A, 306 B, 15/312 R, 316 R, 326, 405



[56] **References Cited**

UNITED STATES PATENTS

| | | | |
|---|---|---|---|
| 2,300,266 | 10/1942 | Smellie | 15/326 |
| 2,788,009 | 4/1957 | Lones | 15/312 R |
| 3,073,321 | 1/1963 | Lukas | 15/312 R X |
| 3,276,065 | 10/1966 | King, Jr. et al. | 15/312 A |
| 3,401,419 | 9/1968 | McEachern | 15/312 R |



*Primary Examiner*—Harvey C. Hornsby
*Assistant Examiner*—C. K. Moore
*Attorney, Agent, or Firm*—Fetherstonhaugh & Co.



[57] **ABSTRACT**

Apparatus is provided for drying a freshly washed and therefore water-coated vehicle as it is moved along a fixed path of travel. The apparatus includes a casing fitted with air fan means and a plurality of nozzles directed at the passing vehicle. A large volume plenum chamber is provided within the casing and this chamber is pressurized by the air fan means to maintain a discharge from the nozzles of a high velocity. Air reaches the fan means through a silencing chamber and an inwardly flared duct. The interior of the casing is provided with silencing means to further reduce noise incidental to normal operation of the apparatus.


**3 Claims, 7 Drawing Figures**

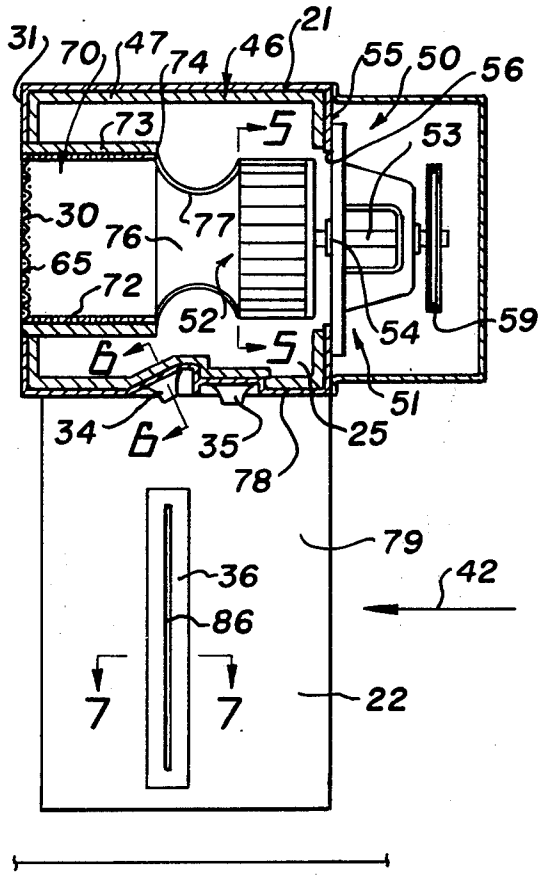

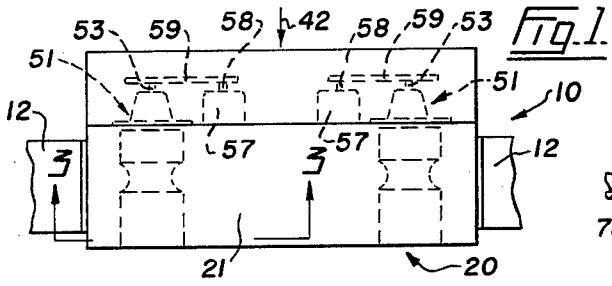


Fig. 1.

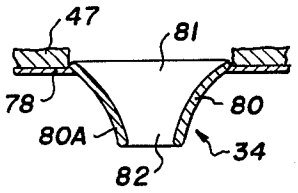


Fig. 6.

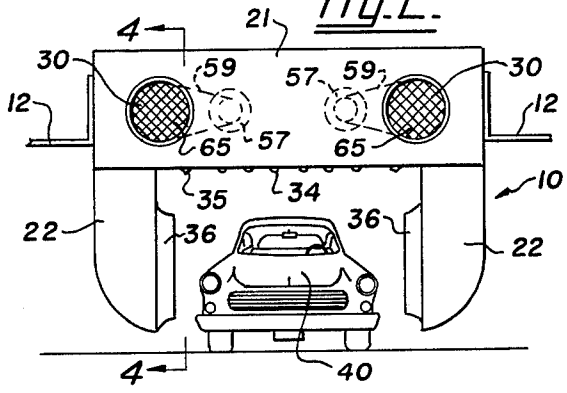


Fig. 2.

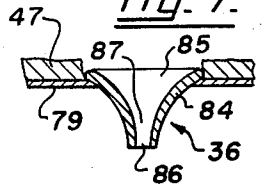


Fig. 7.

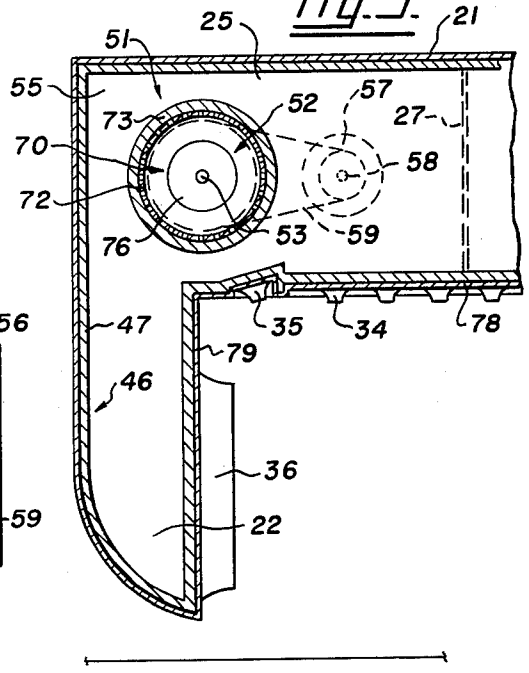


Fig. 3.

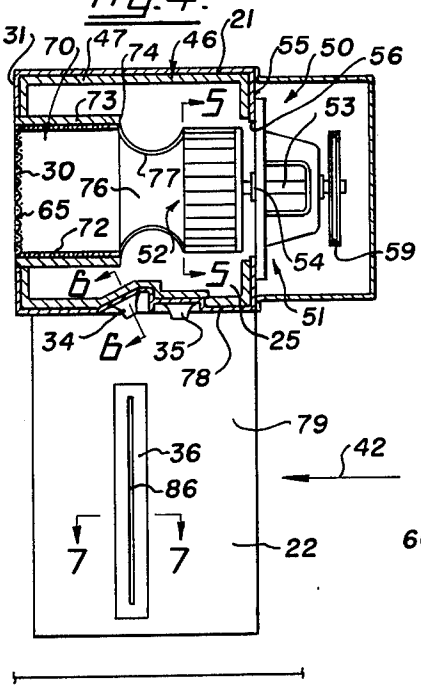


Fig. 4.

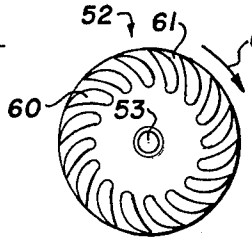


Fig. 5.

# CAR DRYING APPARATUS

My invention relates to apparatus for drying cars and the like as the vehicles travel through a car washing establishment.

Most car washing establishments are equipped with dryers which are extremely noisy and their high sound output levels create problems with customers, local residents, as well as the employees who may suffer ear damage if they do not wear ear protectors. The blowers fitted to conventional dryers normally are powered by electric motors of high horsepower since the force needed to propel air along the tortuous path of travel which is normally provided by such dryers requires that large motors be used to overcome frictional and other losses. For example, a large percentage of the blowers used for car dryers are powered by at least **80** horsepower (HP) electric motors while some of the large installations are equipped with motors of **100** HP or more. One reason for the high horsepower requirements is the common use of a blower often referred to as a pressure-type blower which has a radial impeller operating in a narrow-width scroll casing. This arrangement causes a great deal of unwanted turbulence within the scroll casing as well as in the ducts and the like which connect the scroll casing to the air discharge nozzles and, in addition, the discharge velocity from the scroll casing is extremely high. Such blowers usually develop within the scroll casing from **22** inches of water column ("wc) to **34**" wc static pressure and may have discharge velocities from the scroll casing of from **8000** to **12,000** feet per minute (FPM). These discharge velocities result in static pressure losses which, at **10,000** FPM, can amount to as much as **9** to **10** inches wc. Such extreme losses, combined with the friction and dynamic losses which occur in the ducts and flexible tubing used to convey the pressurized air to the nozzle outlets, result in an inefficient dryer which wastes power in the development of heat and in overcoming shock and dynamic losses.

I reduce the noise level and power requirements of car dryers by providing apparatus through which a large volume of air can flow relatively slowly and freely before being discharged at the required velocity from a number of properly directed nozzles. The apparatus reduces static pressure losses by eliminating the scroll casing and mounting the fan within a large volume plenum chamber provided by the dryer casing itself. There are no ducts, baffles or the like within the plenum chamber between the fan and the air discharge nozzles and pressurized air can flow through the large volume chamber at a relatively low velocity. The fan has airfoil-type blades which are particularly effective in pressurizing the plenum chamber. Finally the nozzles used in my dryer are shaped to ensure that friction and dynamic losses are reduced to a desired minimum.

In drawings which illustrate a preferred embodiment of the invention,

FIG. **1** is a plan of a car drying apparatus in accordance with the present invention,

FIG. **2** is a front elevation of the apparatus,

FIG. **3** is an enlarged vertical section of the apparatus taken on the line **3—3** of FIG. **1,**

FIG. **4** is an enlarged vertical section of the apparatus taken on the line **4—4** of FIG. **2,**

FIG. **5** is a vertical section taken on the line **5—5** of FIG. **4,**



FIG. **6** is an enlarged vertical section of a nozzle fitted to the apparatus and taken on the line **6—6** of FIG. **4,** and

FIG. **7** is an enlarged vertical section of an elongated nozzle and taken on the line **7—7** of FIG. **4.**

Referring to the drawings, the numeral **10** indicates generally a car drying apparatus suitable for use in an establishment which washes automobiles, light trucks and other vehicles. The apparatus **10** is suitably supported to straddle the washed cars as they approach the exit of the establishment. Preferably, the apparatus **10** is supported clear of the floor of the building (not shown) which houses the vehicle washing equipment and, for this purpose, the structure is fitted with brackets **12** which may extend to the walls or roof of the building.

The car drying apparatus **10** comprises an inverted U-shaped casing **20** having an overhead or top portion **21** and side portions **22.** These hollow and preferably substantially oblong portions **21** and **22** have side, top and bottom walls some of which will be specifically referred and enumerated later. The enclosing walls of the portions **21** and **22** provide the casing **20** with a very large plenum chamber **25,** see particularly FIG. **3,** which is common to both said portions. In other words, the chamber **25** extends from the bottoms of the side portions **22** and from end to end of the top portion **21.** This is the preferred arrangement for the chamber **25** although, alternatively, two plenum chambers of equal size may be provided in which case the portion **21** would be fitted with a centrally disposed and transversely extending wall **27** which is shown by dotted lines only in FIG. **3.**

I provide the casing **20** with two air inlets **30** and these inlets may be circular openings formed in an enclosing side wall **31** of the top portion, the openings being spaced apart one near each portion **22.** Air is adapted to be drawn into the plenum chamber **25** through the inlets **30** and to be discharged from said chamber through suitably arranged nozzles **34, 35** and **36** whereby to flow over and around a car **40** (FIG. **2** only) as it passes beneath the drying apparatus **10** moving in the direction of arrow **42** which is shown in FIGS. **1** and **4.**

The large volume chamber **25** has very few obstructions and therefore air can flow therethrough without the usual turbulence and while making less noise then would otherwise be the case. For example, the casing **20** does not have the usual ducts, turning vanes, baffles, flexible tubing and other noise causing obstructions, all of which would add to the power required to blow air through the apparatus. In order to reduce the noise level still further, the casing **20** is provided with sound proofing means generally indicated at **46.** As shown in FIGS. **3** and **4,** the means **46** comprises sheets **47** of a suitable sound deadening material which are applied to the interior surfaces of the enclosing walls of the portion **20** and **21.** Because of the large areas available within the casing **20,** and the presence of the sheets **47,** maximum sound suppression and containment is ensured for the car washing apparatus.

The apparatus **10** will be seen to be provided with fan means generally indicated at **50** for pressurizing the chamber **25** and discharging a stream of air from each of the several nozzles. As shown in FIGS. **3, 4** and **5,** the means **50** comprises a pair of fan units **51** each having an impeller **52** mounted on a driven shaft **53.** A bearing

54 (FIG. 4) for each shaft 53 is secured to a wall 55 of the casing and said shaft projects through an opening 56 in this wall so that the impeller 52 is entirely enclosed by the top portion 21. Each fan unit 51 is powered by an electric motor 57 which is also mounted on the wall 55 and the drive shaft 58 (FIG. 1) of this motor is belt and pulley connected as at 59 to the driven shaft 53 of the fan. The fan units 51, of course, are axially aligned one with each of the air inlets 30 so that air can be drawn through these inlets and pumped directly into the plenum chamber 25.

Referring now particularly to FIG. 5, each impeller 52 will be seen to be provided with airfoil blades 60 which may be mounted on a single disc 61. The impeller is driven in the direction of arrow 62 of FIG. 5 and the blades are curved away from this clockwise direction of travel. This type of airfoil-bladed impeller I have found to be particularly well suited for charging the plenum chamber 25 with air since it is not essential to provide a scroll casing which would result in higher discharge velocities with accompanying losses in static pressure. Air is discharged radially outwards by the blades 60 around the full circumference of the impeller 52 which will be referred to herein as an open-periphery impeller.

The fan means 50 of this particularly embodiment has been described above as including two air blowing units 51 mounted one on each side of the casing as shown best in FIGS. 1 and 2. This is the preferred arrangement since the air impellers and motors therefore can be kept down to a reasonable size and, more importantly, the noise caused by their operation is kept down to an acceptable level. It should be noted however, that a single motor-driven fan unit of a sufficient capacity could be used to pressurize the chamber 25 in which case there would be no transverse dividing wall 27 in the center of the top portion 21 and the fan unit preferably would be centrally mounted on the casing.

As air enters each of the inlets 30, which preferably are fitted with a screen 65 (FIGS. 2 and 4), the air passes through a silencing chamber 70. Each chamber 70 comprises a cylindrical and perforated sleeve 72 which is enclosed by a band 73 of sound deadening material. Fitted to the innermost end of the sleeve 72 is an annular flange 74.

Secured to each flange 74 is a tubular bell inlet 76 having a peripheral wall 77 which is inwardly flared as shown best in FIG. 4, the innermost edge of the duct being disposed alongside an impeller 52. Thus, the bell inlet 76 smoothly accelerates air flowing to the impeller 52 from the silencing chamber 70 thereby further minimizing air inlet noises.

The nozzles 34 are suitably spaced apart along a lower enclosing wall 78 of the cabinet portion 21. These nozzles have their longitudinal axes inclined at an optimum angle which may be approximately 15° from the vertical (see FIG. 4) or towards a car approaching the drying apparatus moving in the direction of arrow 42.

The similarly shaped nozzles 35 are mounted one on the wall 78 near each vertical enclosing wall 79 of a portion 22. As shown best in FIG. 3, the nozzles 35 are inclined towards the center of the apparatus at an angle of about 15° to the vertical.

Referring now to FIG. 6, each of the identical nozzles 34 and 35 will be seen to be substantially in the form of a truncated, hollow cone so as to provide a peripheral wall 80 which curves inwardly from a wide inlet end 81 to a relatively narrow outlet end 82. Preferably, the nozzles are formed of spun aluminum and the wall 80 gradually increasing in thickness near the outlet end 82 as indicated at 80A in FIG. 6. This particular nozzle design allows air to flow therethrough in a uniform laminar manner and to accelerate uniformly from the inlet end 81 to the outlet end 82. There is little reduction in air flow velocity due to friction and the noise factor is considerably reduced, due, it is believed, to the presence of the increased thickness of the wall 80 near the outlet end 82.

FIG. 7 shows that the two identical nozzles 36 are generally similar to the nozzles 34 and 35 when viewed in cross section. Each of the elongated nozzles 36 has side walls 84 which provide an inlet end 85 and a relatively narrow outlet end 86 with a flared slot 87 extending therebetween. This configuration allows air to enter the slot 87 relatively slowly and to accelerate smoothly to the desired velocity without serious pressure loss in much the same manner as air passes through the nozzles 34 and 35.

From the foregoing, it will be gathered I have provided car drying apparatus which has lower power requirements than conventional car dryers. This reduction in power is achieved by providing a large volume plenum chamber through which air can flow at quite a low velocity. Air is delivered from the fan means to the several nozzles at a much slower rate than is possible through relatively small diameter air ducts and the like of the type used in other known dryers and therefore frictional and dynamic pressure losses are negligible. A selected static pressure is developed within the plenum chamber and this allows air to discharge through the several nozzles at a high velocity which has been found best suited for drying a car moving slowly past the drying equipment at a known rate of speed. The speed at which the air travels as it strikes the car to strip the moisture therefrom is such that it minimizes the need for the mechanisms usually required by conventional dryers which allow nozzles to follow the top contour of a passing car.

It should be noted that the fan unit of my dryer is slightly less efficient than it would be if the impeller was enclosed in a scroll casing. The open-periphery impeller discharges in a 360° radial pattern directly into the large volume plenum chamber and the discharge velocities at the tips of the airfoil blades are lower than would be the case if the blades were rotating in a scroll casing. However, the low discharge velocities keep the static pressure losses to a minimum and the plenum chamber static pressure then is correspondingly higher. With a high static pressure maintained in the plenum chamber, air can discharge through each of the several nozzles at a proportionate speed high enough to completely strip excess moisture from the vehicle before it departs from the dryer.

The present apparatus may include a scroll casing to enclose the impeller but the airfoil blades would still be used since air leaves the tips of such blades at a velocity which is always less than the blade tip speed. This means that the outlet velocities, even when using the slightly more efficient scroll, are very low especially at the pressure and volume required by a car dryer. A typical outlet velocity is 3800 FPM. Assuming the losses at the fan discharge of this apparatus to be 1.5 velocity heads, then the loss in the system probably would not

exceed 1.35 inches WC which is approximately 85% less than with some conventional pressure-type blowers. It is possible to select an airfoil impeller with a static efficiency of 65 to 85% while a comparable pressure-type blower might have a static efficiency of 65 to 85% while a comparable pressure-type blower might have a static efficiency of 45 to 55%. Further savings in power and efficiency are possible when the space limitations of a car wash are more generous than generally is the case since the increased space can be utilized to allow proper conversion of velocity pressure to static pressure at the fan discharge. However, the higher the outlet velocity the greater the space that is required and therefore the lower output velocities of my apparatus lends itself to the small space which is available in most car washes.

Since most of the nozzles of this apparatus are circular in cross section, there is less wind shear effect. In other words, the center core of a stream of air discharging from such a nozzle is less affected by induced air which results in a substantially longer throw than is achieved by long narrow slots. The higher velocities at longer distances from the nozzles ensures better removal of water from the surface of a car. My nozzles, including the two side nozzles, have an inwardly flared shape of a predetermined radius with a short straight section at the exit. This allows air to enter relatively slowly and to accelerate smoothly to the desired velocity without serious pressure loss.

As a result of the above mentioned features and advantages, the present apparatus can do an effective drying job with 40 to 50% less HP. The efficiencies achieved also means that it is possible to meet the standards set for sound outputs in a dryer at less expense than with conventional equipment. The large volume plenum chamber allows maximum area for sound attenuation and the nozzle noise is reduced since less turbulence is created near the discharge ends of the nozzles.

I claim:

1. Car drying apparatus comprising a casing having enclosing walls defining a generally unobstructed plenum chamber, a plurality of air nozzles spaced apart on some of the enclosing walls, one of the enclosing walls having an air inlet, air moving means including an open-periphery impeller mounted within the plenum chamber, said impeller being spaced from the walls of said plenum chamber and being open about its periphery for discharge of air around the full circumference of the impeller so as to develop a relatively high plenum static pressure with relatively low impeller discharge velocities, said impeller being the only air-moving and air pressure-building component of the air moving means enclosed within the plenum chamber and being rotatable to maintain a predetermined static pressure therein whereby air is discharged from the air nozzles at a relatively high velocity with respect to the power consumed by the air moving means and with respect to air velocities within the plenum chamber.

2. Car drying apparatus as claimed in claim 1, in which said impeller has blades inclined away from the direction of rotation of said impeller and adapted to move air radially over 360°.

3. Car drying apparatus as claimed in claim 2, in which said blades are cross-sectionally shaped as airfoils.

* * * * *