US00D340058S

United States Patent [19]

Wetzel et al.

[11] Patent Number: Des. 340,058

[45] Date of Patent: ** Oct. 5, 1993

[54] INTERFACE TO A TELEPHONE SET

[75] Inventors: **Timothy D. Wetzel**, San Jose, Calif.; **Wayne McKinnon**, Georgetown, Tex.; **David Bryant; Pearce Jones**, both of Austin, Tex.

[73] Assignee: **Rolm Company**, Santa Clara, Calif.

[**] Term: **14 Years**

[21] Appl. No.: **901,901**

[22] Filed: **Jun. 22, 1992**

[52] **U.S. Cl.** **D14/256**; D13/147; D14/107

[58] **Field of Search** D13/133, 146, 147, 184; D14/240, 256, 140, 107, 114; 439/610, 620; 371/441-443, 325, 330, 428

[56] **References Cited**

U.S. PATENT DOCUMENTS

D. 233,439	10/1974	Mathews	D14/240
D. 253,281	10/1979	Kim	D13/184 X
D. 275,850	10/1984	Wilson	D13/147
D. 304,193	10/1989	Lotz	D14/240
D. 314,747	2/1991	Centola et al.	D13/133
D. 327,071	6/1992	Derbyshire	D14/256
D. 327,470	6/1992	Davis et al.	D13/147
D. 327,879	7/1992	Lou	D14/107
D. 327,880	7/1992	Lou	D14/107
D. 329,639	9/1992	Arvanitakis et al.	D13/133 X
D. 331,395	12/1992	Lou	D14/107

OTHER PUBLICATIONS

Siemens "HICOM 100"; Der neue Standard, um einfach komfortabler zu telefonieren. The relevant pages are 2-5, 7-12 and the last page.

Siemens "HICOM 100"; Convenience in Communication. The relevant pages are 3-8, 10-15 and the last page.

Siemens "HICOM 200"; Das ISDN-Kommunikationssystem mit den vielfälatigen lösungen. The relevant pages are the cover, 2, 5-11, 13 and the last page.

Siemens "HICOM 200"; The ISDN Communication System For Medium-Size Business. The relevant pages are the cover, 2 4-5, 7, 9, 10, 13 and the last page.

Siemens "HICOM 300"; Das ISDN-Kommunikationssystem für höchste Ansprüche. The relevant pages are the cover, 5, 7, 10, 18 and the last page.

Siemens "HICOM 300"; The ISDN Communication System For Every Requirement. The relevant pages are the cover, 4-5, 7, 8, 12-13 and the last page.

Primary Examiner—Nelson Holtje
Assistant Examiner—Jeffrey Asch
Attorney, Agent, or Firm—Michael B. Einschlag

[57] **CLAIM**

The ornamental design for an interface to a telephone set, as shown and described.

DESCRIPTION

FIG. **1** is a perspective view of an interface to a telephone set showing our new design;
FIG. **2** is a top plan view;
FIG. **3** is a bottom plan view;
FIG. **4** is a right side elevational view;
FIG. **5** is a left side elevational view;
FIG. **6** is a rear elevational view; and,
FIG. **7** is a front elevational view thereof.

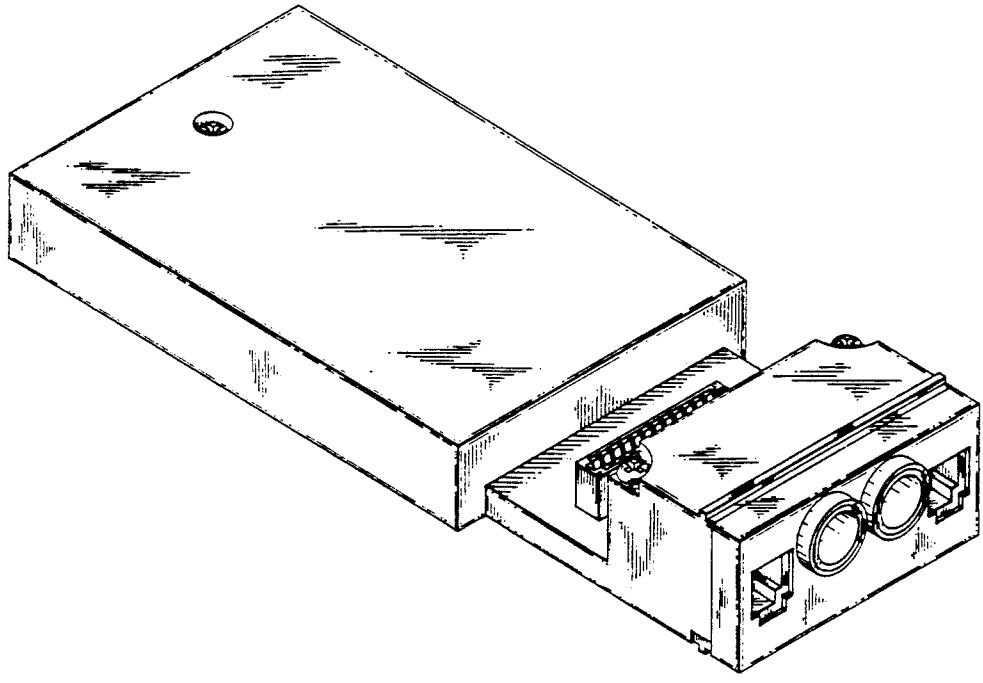

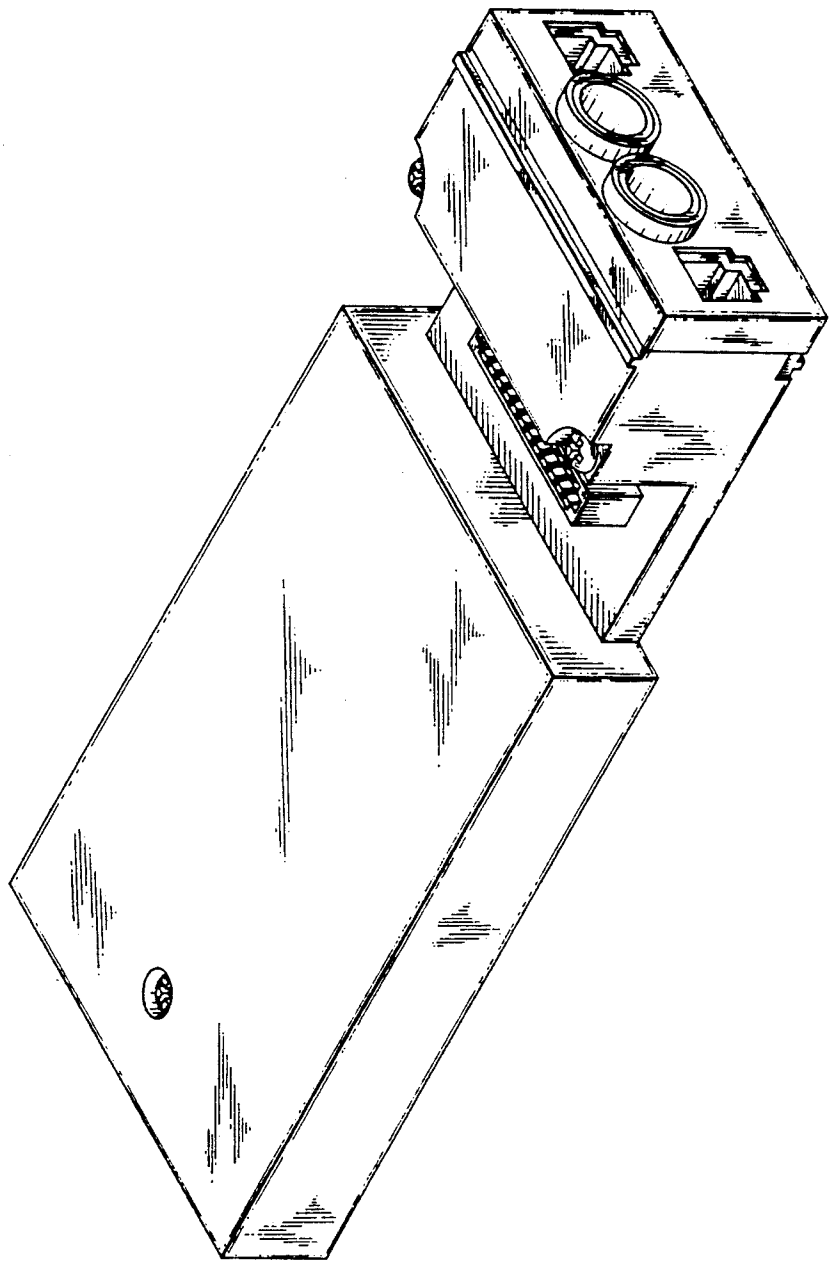

FIG. 1

FIG. 3

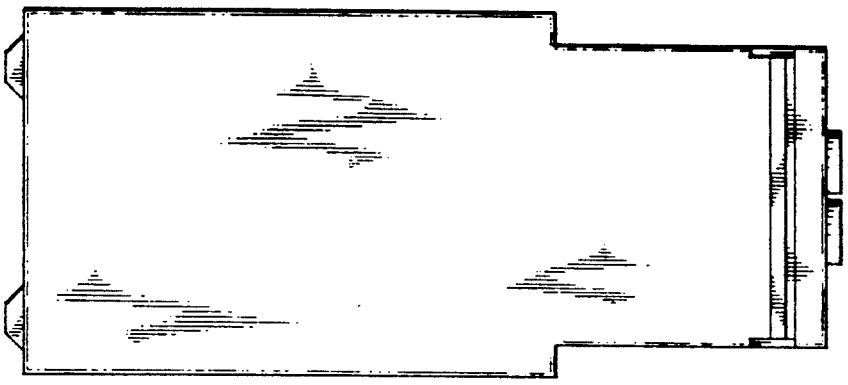

FIG. 2

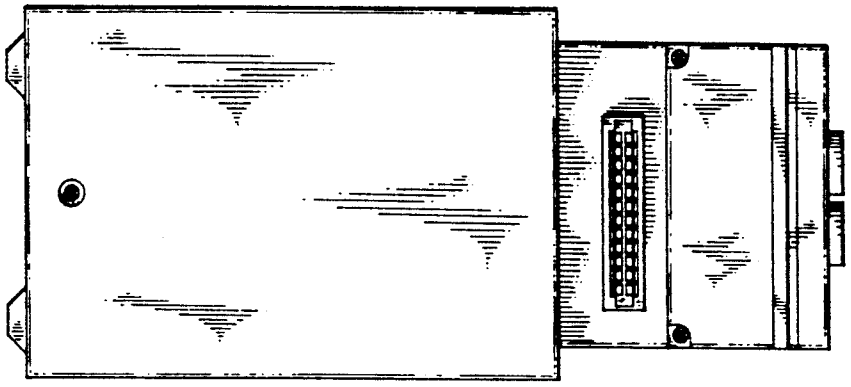

FIG. 6



FIG. 7

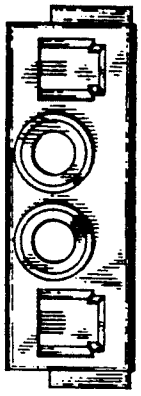

FIG. 4



FIG. 5

