Jan. 12, 1965 D. BENIMA 3,165,319

MECHANICAL DEVICE AND SYSTEM

Filed July 17, 1961 2 Sheets-Sheet 1

Fig. 1

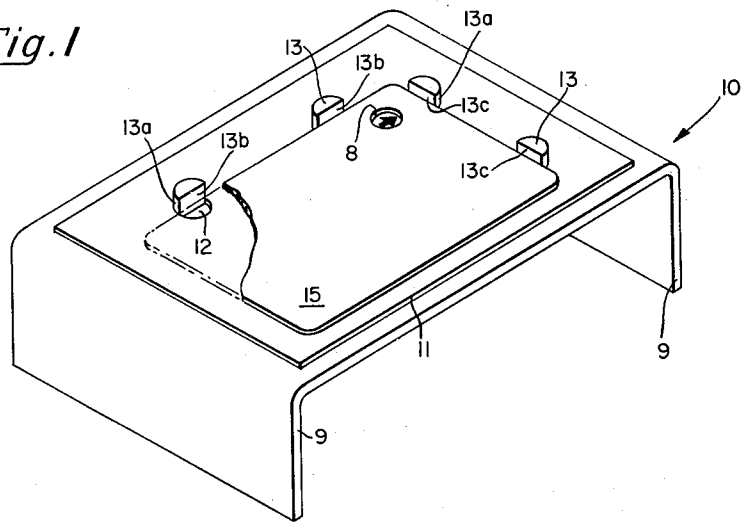

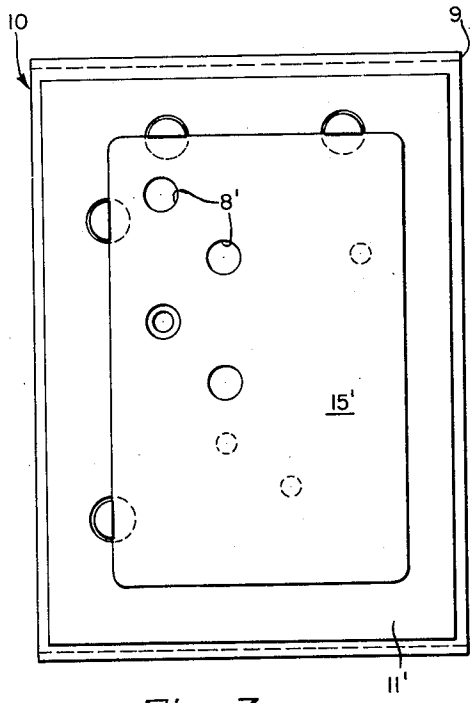

Fig. 3

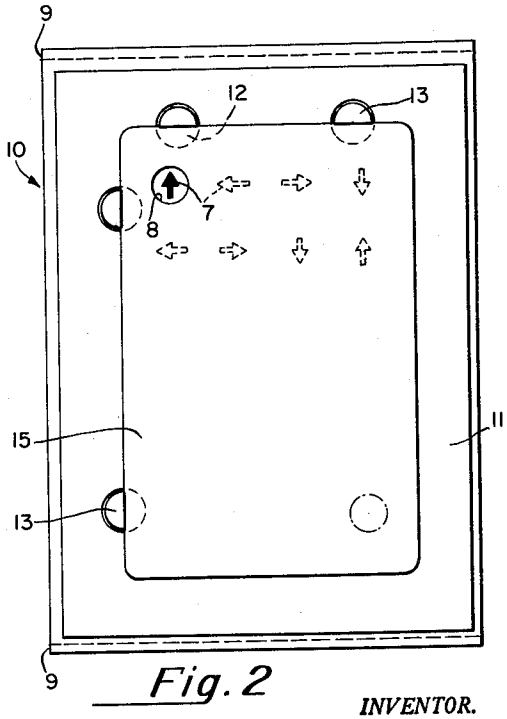

Fig. 2

INVENTOR.
DAVID BENIMA

BY

Nelson E. Kimmelman
ATTORNEY

Jan. 12, 1965 D. BENIMA 3,165,319

MECHANICAL DEVICE AND SYSTEM

Filed July 17, 1961 2 Sheets-Sheet 2

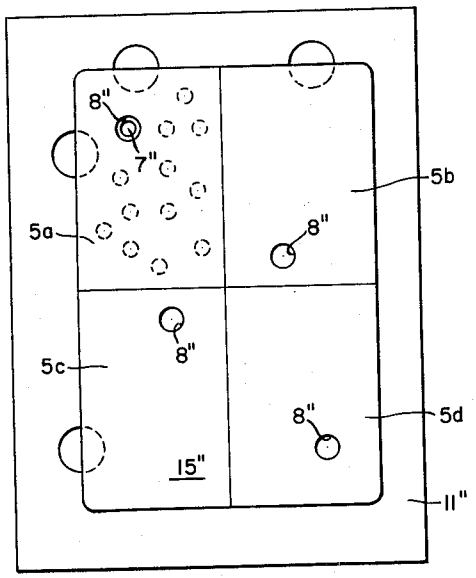

Fig. 4

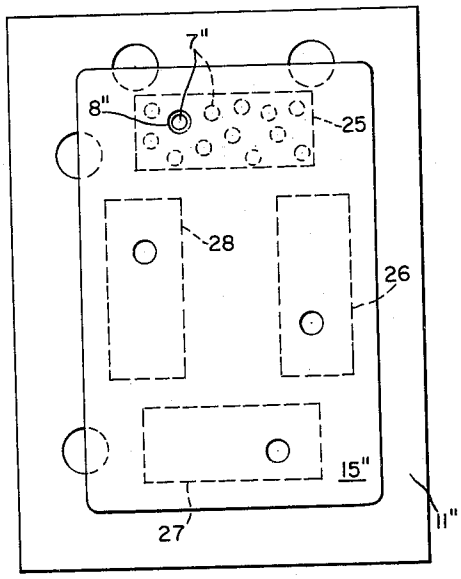

Fig. 5

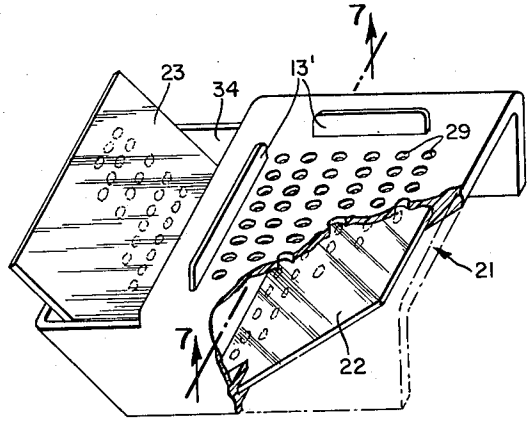

Fig. 6

Fig. 7

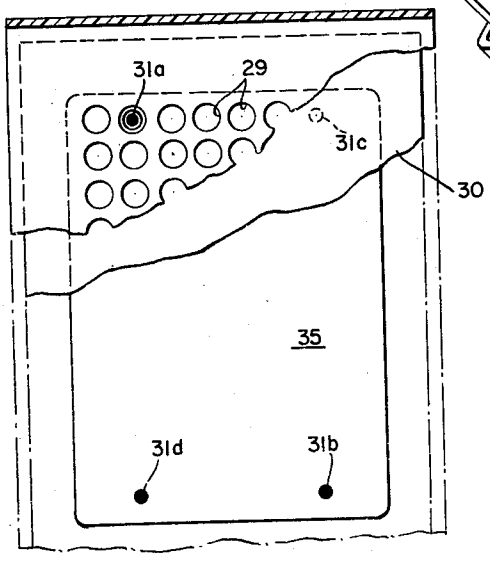

INVENTOR.
DAVID BENIMA

BY

Nelson E. Kimmelman
ATTORNEY

United States Patent Office 3,165,319 Patented Jan. 12, 1965

3,165,319

MECHANICAL DEVICE AND SYSTEM

David Benima, 306 Cooper St., Camden, N.J.

Filed July 17, 1961, Ser. No. 124,533
14 Claims. (Cl. 273—149)

This invention relates to card classification systems and apparatus and in particular to systems and apparatus for dealing out predetermined hands of playing cards.

For various purposes it is desirable to have a way of dealing preselected hands of cards, where a "hand" comprises the cards distributed to a player. For example, for beginners in certain card games such as bridge the distribution of pre-set hands is advantageous, especially when each pre-set hand is accompanied by a detailed instruction or analysis sheet.

It is also desirable to deal pre-set hands of cards for duplicate bridge, or similar competitive games, whether the hands are played simultaneously or sequentially. In a tournament, it might be very convenient or desirable to be able to select at random any one of a number of preselected distributions and have the dealer at each table deal the same pre-set hands immediately from a randomly stacked deck to the players. It would be especially advantageous if the dealer can quickly and easily perform the distribution without having to look at the card faces at all.

Although card games such as bridge are particularly suitable for utilizing preset distribution of cards, there are many other card games and other transactions involving cards to which a fast and very simple method of classification could be applied.

While the prior art has included systems for classifying cards, none of them has been widely used or accepted, because they are relatively difficult to use, slow and expensive. Most of these systems employ a template which is placed on top of a deck of cards, the template having various perforations which coincide with different markings on the back of each card. The fact that the template is on top of the cards makes it very difficult to distribute the cards. Futhermore, when the template is on top of the cards, there is usually part of the template cut away, to permit the dealer's thumb to slide each card out after he has determined where it should go. This reduces the areas of card and matrix which can coincide and thus reduces the area available for coding.

One prior art system used cards whose backs were coded with little arrows indicative of the desired direction, or were marked with the initials of the four possible directions of distribution (N, S, E, W). The template contained a single hole which permitted only one of the arrows on each card or one of the direction initials to appear in it. Here, too, the template was placed over the top of the deck of cards. Since each different deal requires a hole in a different location and since, as has been pointed out above, an area on the template is cut out for the thumb of the dealer, the total number of different possible deals with one deck of cards in this system is restricted to the number of arrows or direction initials that can be squeezed into about one-half of the back surface of the cards.

In another prior art system the backs of the cards have a colored dot. The location of this dot is different for each card. A template, placed on top of the card, has a small arrow cut out for each card in the deck, which coincides with the colored dot. The direction of the arrow indicates where the card is to go. This system has the disadvantage that the size of the arrows is necessarily very small and as a result the system puts a strain on the eyes of the dealer and is also otherwise slow and hard to use since the cards have to be removed one

by one from under the template without distributing the alignment of the card directly underneath.

In still another prior art system the backs of the cards were coded with numbered arrows representative of the number of the selected deal and the direction that the cards were to go, no template being used at all. This system had the disadvantage that only a relatively small number of possible deals could be coded on to each deck and that it required undue attention on the part of the dealer, especially so in the case where cards must be dealt to more than four players.

It is therefore a principal object of the invention to provide a novel system for sorting cards or the like into a predetermined number of different classes.

Still another object of the invention is to provide a relatively simple, inexpensive, and efficient system for sorting cards into a desired number of different classes.

Another object of the invention is to provide a simple and inexpensive device which enables a dealer to distribute a deck of coded playing cards to the players according to a prearranged plan.

Yet another object of the invention is to provide a novel system by which coded playing cards may be distributed into any one of a great number of possible sets of preselected hands, quickly and efficiently.

A further object of the present invention is to provide a novel system for enabling a dealer to distribute coded playing cards to a selected number of players according to preset hands without having to see the faces of the cards.

Still other objects of my invention will be apparent to those skilled in the art upon perusal of the specification, drawings and claims herein.

In accordance with my invention I provide cards, having code markings, perforations or other indicia, which are designed to be individually placed on top of a "matrix" or code sheet which also has indicia corresponding to the cards to be dealt. The indicia on the card and on the matrix are so arranged that there is a visible registration or coincidence of the indicia, which is seen by the dealer, who is thereby informed where to deal the card. By providing that the matrix lies below the card to be dealt, the manual operation of dealing is considerably facilitated.

In one form of the invention each card has one hole in it, the location of which differs from the location of the holes on all other cards. When placed over the matrix, this hole coincides with one of the indicia on the matrix, the exposed indicium designating by its character the player to whom that card is to be dealt. In another form of the invention all cards destined to go to the same player have a hole in the same place. The matrix has four marks or holes, only one of which will be visible to the dealer, whenever a card is placed on the matrix in proper alignment. The coincidence of the hole or mark on the matrix and the hole in the card will furnish to the dealer the information as to where the card is to be dealt by its location. In still another form of the invention each card has four holes in it and the matrix has marks or holes so positioned that only one of them will coincide with one of the four holes in each card, the position of the coincidence indicating to which player the card is to be dealt. Other forms of the invention are also described herein.

FIGURE 1 is a perspective view of card-sorting apparatus constructed in accordance with my invention.

FIGURE 2 shows a "matrix" and a card that may be used with the apparatus shown in FIGURE 1 in one form of my invention.

FIGURE 3 shows a matrix and a card that may be used with the apparatus shown in FIGURE 1 in another form of my invention.

FIGURE 4 depicts a matrix and a card usable with the apparatus shown in FIGURE 1 in still another form of my invention.

FIGURE 5 shows how a card could be coded for use in still another form of my invention.

FIGURE 6 is a perspective view of another type of sorting table constructed in accordance with another form of my invention; and

FIGURE 7 shows a matrix and card usable with the apparatus shown in FIGURE 6 as viewed in the direction of arrows 7—7.

Referring in particular to FIG. 1, a sorting table 10 is shown which may be made out of white plastic, for example, or any other desired substance. The top surface of table 10 is preferably elevated (1½", for example) from the bottom of its legs 9 to permit the dealing hand of the dealer to easily insert or withdraw cards from the table as will be explained hereinafter. The top surface of table 10 is provided with card-guiding projections 13 which are constructed and arranged to hold a "matrix" 11 (FIG. 2) in place and to engage two adjacent edges of a pre-coded card 15. As shown, the projections 13 have curved edges 13*a* and straight edges 13*b* and 13*c*. (Alternatively, two upstanding walls lined up at right angles to one another on the lines where the edges 13*b* and 13*c* fall as shown in FIG. 6, can be used with matrices having corresponding slits cut in them).

In accordance with one form of my invention, a matrix 11 is placed on the table 10 so that its large holes 12 (or slits, as the case may be) fit over the projections 13 (or wall) as shown in FIG. 2.

On matrix 11 appear a number of marks or indicia such as the arrows 7 or initials of directions as N, S, E and W printed thereon (or punched therein). After the matrix 11 has been placed upon the table 10, each card 15 of the deck to be sorted is successively placed over the matrix with its left and top edges in contact with the inner straight edges 13*b* and 13*c*. Each of the cards 15 has a differently located perforation 8 so that when it is placed over the matrix 11, the particular one of the arrows which shows through it will indicate the person to whom the card is to go. If the cards are "polarized," that is marked in such a way that they are to be placed on the table 10 with a particular one of their shorter edges touching the top straight edges 13*c*, the hole 8 can be located anywhere in the card. However, if the cards are not polarized and it is desired to be able to insert the card with either of its shorter edges engaging the surfaces 13*c*, two holes must be punched in each card, the holes being symmetrical about the center of the card. For different deals, different matrices having different indicia are placed on the sorting table 10.

In another form of the invention cards intended for the same player have at least one hole in the same place. Thus, in a complete deck of fifty-two cards thirteen of them will have a hole in some location "A," another thirteen of them will have a hole in a location "B," and so on. The matrix to be used in this form will, therefore, have four marks, holes or other indicia disposed so as to coincide with respectively different sets of thirteen cards. It is evident that one hole in a set of thirteen cards can only be used for one distribution, namely the one in which these cards are in the same hand.

To achieve more distributions, more than one hole is provided for in each card. FIG. 3 shows how such a card 15′ may typically be arranged. As a practical matter, if the cards are not polarized, as explained below, perhaps about 20–30 holes 8′ may be punched in each card so that a corresponding number of different deals is possible. This system has the advantage that the face value of the card cannot possibly be identified from inspection of the back of the card. Furthermore, since for any particular deal the thirteen cards of each hand have a hole in the same location, only four perforating operations are needed for coding the cards for any one deal.

This makes "on-the-spot" coding of randomly dealt distributions possible. It also is advantageous, from a manufacturing standpoint. As in other forms of the invention, if it is desired to insert the cards on the table 10 in either of its two longitudinal positions, each card will have holes in pairs, each pair being symmetrically arranged with respect to the center of the card.

In still another form of the invention the position of the coincidence of the card and matrix indicia in itself may be used to indicate into which of four possible hands, for example, a card is to be dealt. FIG. 4 shows a system in which as many different hands may be dealt from a single deck of pre-coded cards as there are possible distributions, by utilizing this form of the invention. Each of the cards 15″ has four holes 8″ punched in it. For purposes of explanation it will be assumed that the back of each card 15″ is divided by lines as shown into four rectangular fields or quadrants 5*a*, 5*b*, 5*c* and 5*d*. The matrix 11″ may also have, or be assumed to have, corresponding quadrants. If it is desired to code into the matrix 11″ all of the cards of a fifty-two card deck fifty-two perforation 7″ are made in the matrix 11″, thirteen of them being punched into each of the four quadrants of the matrix. In the interest of clarity only the holes in one quadrant are shown. These holes should be large enough to be easily visible and yet small enough to permit locations for fifty-two of them to be assigned in each quadrant of matrix 11″. By providing locations for fifty-two holes in each quadrant of the matrix, each card of the deck may effectively be directed into any one of four hands, but in any one deal of the cards, i.e., for any one matrix, only thirteen of the possible fifty-two hole locations in each quadrant of the matrix are ordinarily used.

The set of four perforations on each card is made to be entirely different in location from the set of four perforations on every other card of that deck. If it is desired to be able to insert the cards either way on the table 10, the card holes 8″ in the quadrants 5*a* and 5*d* are made mutually symmetrical with respect to the center of the card and so are the holes 8″ in the quadrants 5*b* and 5*c*.

If the matrix 11″ has its indicia 7″ in the form of perforations, it is desirable to have the underlying table 10 of a color which contrasts with the color of the back of the card 15″.

The coding of the matrix 11″ is such that when each of the differently punched cards 15″ is successively laid upon it, one and only one of the four holes 8″ will coincide with a mark 7″ on the matrix. The dealer will be able to observe at a glance, in which quadrant the coincidence occurs and this will indicate to him where the card must go. If the coincidence occurs as shown in FIG. 4, for example, the dealer will place that card into a pile reserved for all cards which show a coincidence in quadrant 5*a*. Similarly, if the coincidence occurs in 5*b*, 5*c* or 5*d*, the dealer will segregate the cards accordingly. Of course, if desired, the dealer can distribute each card directly to one of the players depending upon the location of the coincidence of that card. To facilitate direct distribution the matrix or the table may bear some printing in or adjacent to the respective quadrants, to signify which player (i.e., E, W, N or S) is to receive cards whose coincidence occurs in that quadrant.

If the distance from each of the holes 8″ in the quadrants 5*a* and 5*d* to the center of the card is not the same as the distance from the holes 8″ in the quadrants 5*b* and 5*c* to the center of the card, it will ordinarily be very difficult for a player to determine what the face value of any card is merely by observing the pattern of the holes from the back. In certain cases, it may be desirable to have all holes symmetrically positioned with respect to the center of the card to make detection more difficult.

It should be understood with respect to the forms of the invention explained above that the matrix can either

be perforated or have marks or other symbols printed thereupon which are visible through the holes in the cards. It should also be realized that the shape of the indicia on the matrices can be a matter of choice as can the color or colors thereof. Similarly, the perforations in the card can have any shape so long as they permit the indicia on the matrix to be aligned therewith.

In the form of the invention shown in FIG. 4, the backs of the cards **15''** were divided into four identical rectangular quadrants or fields. It should be appreciated, however, that there may be any number of fields on the backs of the cards and that the shapes of the fields can have any desired outline. For example, as shown in FIG. 5, it may be desirable to employ fields for coding the matrix and the card which are more directly analogous to the relative positions of the players. As shown in FIG. 5, the backs of the cards could be ruled into four fields **25**, **26**, **27** and **28** and there could be one hole punched in each sector as shown for the system explained above in connection with FIG. 4. The matrix would therefore have in the sections thereof lying below the fields **25–28**, thirteen holes **7''**, as described in the case of FIG. 4. (For simplicity only a few of the holes **7''** are shown underlying field **25**.) Thus, for example, there could be a coincidence of the card hole and the matrix hole only in field **25** as shown in FIG. 5, so that the dealer would thereupon distribute that card and all other cards in which registration occurred in the field **25** to the person opposite him. Likewise, if the coincidence occurred in the field **28**, the dealer would deal the card to the person on his left, and so on. Many other field shapes are possible such as, for example, four contiguous triangular fields whose apices meet at the center of the card, these sectors also generally corresponding to the actual position of the players with respect to the dealer.

FIGURES 6 and 7 show still another version of my invention using a special sorting table **21** which is different from the table **10** previously explained. This table includes the projections **13'** and has perforations **29** in its top surface in every possible location where a matrix may be perforated for coding purposes. Two mirrors **22** and **23** permit the dealer to see the underside of the top surface of table **21** through opening **34** in the table. A matrix **30** similar to matrix **11''** can be used which has perforations therein representing different ones of the cards to be sorted. The cards **35** (FIG. 7) to be sorted, however, do not have perforations but instead have, on their faces, two pairs of circular or other spots or areas **31***a*, **31***b* and **31***c*, **31***d* analogous to the perforations in the cards shown in FIG. 4. As in the previous embodiments, each card is placed over the matrix **30** and the dealer, by looking into mirror **23**, will see a coincidence in one—and only one—of the fields used, which will indicate to him to which player the card will be distributed. The outline of the fields may be drawn or otherwise indicated on the underside of the top surface of table **21**, if desired, to help the dealer. This system has the advantage that the coding is not visible by observing the backs of the cards.

I claim:

1. In combination: a number of cards each having a different pattern of perforations, a matrix having a plurality of indicia-bearing fields for sorting said cards into a plurality of groups respectively corresponding to said fields, said cards overlying said matrix one-by-one, one perforation only of each of said cards coinciding with an indicium of said matrix, and said one perforation in each card of the same group only being located to coincide with an indicium in the field of said matrix corresponding to that group.

2. The combination according to claim 1 wherein said cards have backs and faces, said cards individually overlie said matrix face down, and wherein the coincidence of said one card perforation and a said matrix indicium permits said matrix indicium to be seen from above through the one perforation without making the face of each card visible.

3. The combination according to claim 1 wherein said cards are generally rectangular in shape and said pattern of perforations in each card includes at least two perforations disposed symmetrically with respect to the center of the card.

4. In combination: a plurality of cards to be distributed each having a back and a face, each of said cards having a selected number of perforations therein, and a matrix having a plurality of indicia thereon, said cards overlying said matrix face down one at a time, one of said perforations in each of said cards coinciding with one of said matrix indicia, the location of said coincidence relative to the center of the card indicating the distribution of that card.

5. The combination comprising: a plurality of playing cards having backs and faces, each of the cards having a number of similarly located fields with at least one perforation in each field, the locations of the perforations being different for each card, a matrix having a like number of similarly located fields and bearing indicia in the several fields, said cards overlying said matrix one at a time, face down, whereby coincidence of a perforation and an indicium may be observed without seeing the faces of the cards, each card having a single perforation coinciding with an indicium of the matrix when the card is placed on top of the matrix.

6. An arrangement for distributing a deck of playing cards into M predetermined hands of N/M cards each, comprising: a common matrix having M fields with N indicia positions in each field, said matrix bearing indicia in N/M of the indicia positions in each field and with the indicia being located in different indicia positions in each field, a deck of N playing cards overlying said matrix card-by-card, each card having M fields of N possible perforation positions in each located in correspondence with the indicia positions of said matrix, and each card having one perforation in each of its fields with the perforations being differently located in each card.

7. The arrangement as claimed in claim 6, including a number of different matrices for use with the same deck of cards, each matrix being used to distribute the deck into a different predetermined set of M hands each.

8. An arrangement for sorting a deck of cards into M preselected groups comprising: said deck of cards, each card having M fields respectively corresponding to said groups and bearing one indicium in each field, the fields being similarly located in all cards and the card indicia being differently located in the different cards, and a common matrix bearing indicia thereon, the matrix indicia being located so that only one matrix indicium coincides with a card indicium as the card is registered with the matrix, and so that the location of the coincidence is in the same field for all cards of the same preselected group.

9. An arrangement for distributing a deck of N cards into M preselected groups of N/M cards each, comprising: said deck of cards; each card having a back, a face, and M fields each bearing one indicium, the indicia being differently located in each card; a common matrix having M fields located to register with the M card fields as the cards overlie said matrix face down, one at a time, the M matrix fields respectively corresponding to the M preselected groups; each matrix field having N/M perforations therein and each of the N/M perforations of a matrix field being located for coincidence with an indicium of a different card of the same preselected group.

10. A matrix for distributing a deck of N cards into M preselected hands of N/M cards each, each card having M fields respectively corresponding to said M hands with N possible perforation positions in each field, and each card having one perforation in each of its fields with the perforations being differently located in each card, said matrix comprising: M fields with N possible indicia bearing positions in each field located to register with the perforation positions of the cards, said matrix

bearing indicia in N/M of the indicia positions in each of its fields and with each different indicium of a matrix field being located to coincide with a perforation in a different one of the cards of the same preselected hand.

11. The arrangement according to claim 9 wherein means cooperating with said matrix and said cards are additionally provided for rendering said coincidences visible from above said card.

12. The arrangement according to claim 11 wherein said additional means comprises a sorting apparatus consisting of an essentially planar surface having a plurality of perforations on which said matrix is placed and each of said cards is successively placed face down on said matrix, said sorting means also including means below said planar surface for reflecting the underside thereof to a point above said sorting means.

13. A sorting table adapted to be used in conjunction with cards having indicia thereupon and a matrix having indicia thereupon and at least two apertures therein, said table comprising an essentially flat member, means substantially transverse to said flat member for supporting said flat member on a base, and a pair of element upstanding from said flat member and each having a shape to receive a different one of the apertures in said matrix placed upon said member thereby to fix the position of said matrix, said upstanding elements also including portions for engaging selected edges of said cards placed over said matrix, said supporting means being sufficiently high to permit an operator of said table easily to set down and remove said cards from said matrix.

14. The table according to claim 13 in which said member has a plurality of perforations and in which reflective means are disposed below said member for reflecting the under side of said member to a point above said member.

References Cited by the Examiner

UNITED STATES PATENTS

1,527,059	2/25	Morgan	273—152.4
2,652,635	9/53	Conger	273—152.1 X
2,666,645	1/54	Phillips	273—149

LOUIS R. PRINCE, *Primary Examiner.*

JAMES W. LOVE, *Examiner.*