(19) DANMARK

(10) **DK/EP 2029420 T3**

Patent- og Varemærkestyrelsen

(12) Oversættelse af europæisk patentskrift

(51) Int.Cl.: ***B 63 B 1/24 (2006.01)*** ***B 63 B 1/08 (2006.01)*** ***B 63 B 1/20 (2006.01)*** ***B 63 B 1/32 (2006.01)*** ***B 63 B 1/40 (2006.01)***

(45) Oversættelsen bekendtgjort den: **2015-02-09**

(80) Dato for Den Europæiske Patentmyndigheds bekendtgørelse om meddelelse af patentet: **2015-01-21**

(86) Europæisk ansøgning nr.: **07747515.0**

(86) Europæisk indleveringsdag: **2007-06-18**

(87) Den europæiske ansøgnings publiceringsdag: **2009-03-04**

(86) International ansøgning nr.: **NL2007050292**

(87) Internationalt publikationsnr.: **WO2007148966**

(30) Prioritet: **2006-06-19 NL 2000109** **2006-07-28 US 494675**

(84) Designerede stater: **AT BE BG CH CY CZ DE DK EE ES FI FR GB GR HU IE IS IT LI LT LU LV MC MT NL PL PT RO SE SI SK TR**

(73) Patenthaver: **Van Oossanen & Associates B.V., Sparrenbos 33, 6705 BB Wageningen, Holland**

(72) Opfinder: **VAN OOSSANEN, Pieter, Sparrenbos 33, NL-6705 BB Wageningen, Holland**

(74) Fuldmægtig i Danmark: **Zacco Denmark A/S, Arne Jacobsens Allé 15, 2300 København S, Danmark**

(54) Benævnelse: **Skib med en bærevinge under vandlinjen**

(56) Fremdragne publikationer:
WO-A1-2004/020276
DE-A1- 3 936 280
JP-A- 11 180 379
JP-A- 62 244 779
US-A- 4 915 048
US-B2- 6 578 506

Description

Background of the invention

Field of the Invention

[0001] The present invention relates to a vessel with a single hull, the aft part of which has a smaller water displacement and less breadth lying in the water than the middle or central part, and provided with a foil extending below the waterline.

Description of the Related Art

[0002] Vessels having foils or vane-like members situated under the aft portion of the hull are known in the prior art. In particular, planing vessels are sometimes provided near the end with a foil or flap extending below the hull, in order to ensure that during planing the trim angle that the hull forms with the surface of the water is limited. Such planing vessels generally have a hull displacement that does not change substantially from the middle part in the aft direction.

[0003] An example of such a construction is found in US 2,832,304, US 4,915,048, US 6,578,506 and the Abstract of Japanese Patent Application 62008893. In these cases the foil is situated on the aft end of the vessel, and a vertical lift force is generated. Such vessels have no constriction of the submerged part of the vessel, in other words the cross-section of the submerged part of the vessel (perpendicular to the direction of movement of the vessel) does not decrease in the aft direction. In US-6.578.506, for instance, a small sailing vessel with a foil on its rudder blade is disclosed. The foil is inclined upward with respect to the waterline.

[0004] Some vessels are known which have one or more foils behind the vessel in order to reduce backwash. In DE-A1-39 26 280 such a vessel is disclosed which has a foil behind its stern. In rest, the foil is located above the waterline. In JP-A-11 180379 a high-speed vessel is disclosed which has two foils behind its stern. The front foil is attached with its leading edge against the stern, and the flow between both foils is used to reduce backwash. In rest, the foils are located above the waterline.

[0005] Furthermore, some catamarans are provided with fins for the purpose of reducing ship movement in waves. Such fins do not always have a foil profile. An example of the use of these fins in a boat is found in US-A-3,208,422.

[0006] US 6 578 506 B2 (BIEKER PAUL G) discloses a vessel with hydrofoil device for reducing wake formation on a partially immersed hull of the single hulled vessel, said hydrofoil device comprising: a transverse hydrofoil positioned below the surface of the

water when said vessel is in the water, said hydrofoil being capable of a positive angle of attack of between 2 to 8 degrees to the static waterplane, the leading edge of said hydrofoil being between 5 and 15% of the immersed length of the vessel aft of the transom of said vessel, and the upper surface of said hydrofoil being between 5 and 15% of the immersed length of the vessel below the static waterplane of said vessel, a strut or multiple struts for attaching said hydrofoil to said vessel, a means for attaching said hydrofoil to said strut or struts, and a means for attaching said strut or struts to said vessel. Additionally, International Publication No. WO 2004/020276 A1 discloses previous work of the present inventor wherein a foil is located entirely-under the aft portion of a vessel to improve performance.

Summary of the invention

[0007] The present invention relates to a vessel having a non-planing hull according to claim 1 such as a sailing boat or a motor-driven vessel. It can be a relatively small vessel such as a leisure vessel or a large vessel such as a tanker, container ship and the like. Such vessels are provided with a constriction, in other words the cross-sectional hull area below the waterline decreases in the longitudinal direction of the vessel, viewed in the aft direction. Such a reduction of the cross-sectional hull area is at least one-third to one-half relative to the location having the largest cross-sectional area of the submerged part of the vessel for medium-speed craft, and up to 100% in the case of typical merchant ships. In the case of some such vessels, the transom may not be submerged in the water, but may lie above the waterline. At the position of a constriction, the flow of the water during forward movement of the vessel will be directed upwards and/or inwards.

[0008] The terms length, breadth, waterline, etc. are used in this description. These terms are associated with the position of the vessel in the water. While it is being propelled in the usual direction, the direction of propulsion is the longitudinal direction in this case.

[0009] In the present invention a foil is provided near the place where the greatest flow constriction occurs. This foil is arranged in such a way that, apart from an upward lifting force, a forward propulsion force is provided. This propulsion force manifests itself by faster travel in the same conditions or by reduced fuel consumption, or by both of these.

[0010] Specifically, in accordance with an aspect of the invention, the invention provides a vessel with a non-planing hull, of which the stern or aft portion has a smaller water displacement than the central portion of the hull, and which hull is provided with a foil attached at a distance thereto, which is below the surface of the water during operation, wherein said foil is attached in proximity to the aft end of the hull in such a way that the leading edge of the foil is at most half a chord length of the foil in front of the position where the aft end of the hull substantially leaves the water and said foil, as defined by its chord, is tilted downwards by its leading edge with respect to the horizontal.

[0011] The decrease in hydrodynamic resistance which is achieved is based on the fact that the foil, in the flow as exists below the aft-body of the vessel, develops a propelling force on the foil, and thus on the vessel, which is significantly larger than the drag of the

foil itself. It should be understood that this theory in no way affects the scope of protection of the present patent.

[0012] It is of importance in realizing a propelling force on the foil to orient the foil at an angle with respect to the direction of the upward-sloping flow of the water below the rear part of the vessel. This orientation can be achieved, in general, by specifying the leading edge of the foil to have downward tilt angle (i.e., greater than zero degrees) with respect to the horizontal.

[0013] it should be noted that a foil is highly preferred to achieve the required lift force which is roughly perpendicular to the direction of the incident flow. One skilled in the art would understand that various foil profiles could be used, including the well-known NACA aerodynamic profiles as well as the German Eppler shapes (*see e.g.* "Theory of Wing Sections", by Ira H. Abbott and Albert E. von Doenhoff, Dover Publications, Inc. New York, and "Airfoil Design and Data", by Richard Eppler, Springer-Verlag Berlin, ISBN 3-540-52505-X). A curved flat plate or other element may possibly be substituted for the foil to achieve a net forward thrust force, but such is not preferred due to inefficiencies resulting from the tendency of such elements to produce flow separation and resultant high drag for pitch angles between the plate and incident flow greater than about 1-2 ° that can occur, for instance, during normal operation due to changes in vessel speed. Hence "foil" as used herein should be interpreted to cover such curved plates or elements giving rise to such a lifting force.

[0014] Regarding the positioning of the foil relative to the hull, some ships have a flat transom stern. In the case of most ships with such a stern, the "position where the rear side of the hull substantially leaves the water" will, in general, be the longitudinal location of the bottom of the transom, if submerged or a point on the bottom of the adjacent aft hull portion if the transom is not submerged. In the case of a ship which at its aft end has a recess or which at its rear side is provided with sponsons or floats and where the hull leaves the water between the sponsons, the position where the hull substantially leaves the water will usually be the longitudinal location where the hull in the recess or between the sponsons leaves the water.

[0015] In summary, according to an aspect of the invention, at least half the chord of the foil is behind a vertical line through the location where the hull leaves the water.

[0016] In this application certain angles and dimensions have been defined in the following way:

> The average angle of the buttock lines at the rear of the ship, α, is the angle between the longitudinal tangent line to the aft-body of the hull below the water and the horizontal. Angle α also is referred to as the angle between the tangent to the vertical longitudinal cross-sections of the aft-body of the ship and the horizontal. In modern, conventional ships including merchant ships, this angle α will normally be between about 8° and 16°.

[0017] The angle of the tangent to the buttock lines at the rear of the vessel (or tangent to the vertical longitudinal cross-sections) at the longitudinal position of the leading edge of the foil, β, is the angle between the tangent to the hull below the water surface at the longitudinal position of the leading edge of the foil and the horizontal. In some embodiments of the invention, β is about 11 ° to about 25°.

[0018] The angle of the chord of the foil with respect to the horizontal is referred to as γ. The chord of the foil is the (imaginary) line through the leading and the trailing edges of the foil. As used herein the "tilt" of the foil is determined by the angle γ.

[0019] The length of this chord preferably depends on the length of the vessel. According to a particular embodiment of the invention, the length of the foil is approximately between 2% and 10% of the length of the waterline of the ship operating at its normal draught.

[0020] In a preferred embodiment, the foil is mounted near the rear of the vessel in such a way, that a vertical (or perpendicular) line through the location where the rear or aft-part of the hull substantially leaves the water intersects the foil at less than or equal to about 0.5 times the length of the chord of that foil measured from its leading edge, or is in front of its leading edge.

[0021] In a further embodiment, the leading edge is positioned less than or equal to about 0.75 times the chord length behind a longitudinal location where the aft hull portion leaves the surface of the water.

[0022] In a further embodiment of the invention, the leading edge of the foil is tilted downwards with its chord at an angle γ of between greater than 0° and about 22° with respect to the horizontal. The exact angle depends on the angle β. In general, when the angle β is large, a larger downward tilt angle be chosen.

[0023] According to an embodiment of the invention especially suited for newly-built ships, the foil is located substantially entirely within the limits (vertical projection) of the vessel. In another embodiment, especially suited for attaching the foil to existing ships, the leading edge of the foil is located behind the aft end of the vessel.

[0024] In an embodiment which is especially suited for newly-built ships, the buttocks of the hull are configured with a greater upwards slope or inclination in front of or at the longitudinal position of the leading edge of the foil and the rearward-most part of the hull above the foil is located substantially above the water surface. In this embodiment, the greater steepness of the buttock lines preferably starts between about 0.5 and about 1.5 times the chord length of the foil in front of the longitudinal position of the leading edge of the foil.

[0025] In the variation in which the foil is located substantially entirely within the aft limits of the vessel, it is proposed, according to a particular variation of the invention, locally to provide the hull with a recess at the aft end. The length of a recess of this type is preferably from about 0.75 to about 1.50 times the length of the chord of the foil.

[0026] According to a further specification, the distance from the leading edge of the foil to the hull is greater than about 0.10 times, and preferably between about 0.2 to about 0.5 times, the chord length of the foil.

[0027] The foil may conceivably be fastened to the stern by any way. If the foil extends wholly or partly below the hull, it may be fastened to the rudder headbox, i.e. to the stationary portion of the rudder construction which extends below the hull. It may also be beneficial to attach (streamlined) struts in order further to support said foil.

[0028] According to an advantageous further embodiment of the invention, the foil for its largest part extends beyond the aft end of the vessel. This latter construction is particularly important if existing vessels have to be retrofitted with this fuel-saving construction. If the foil is entirely placed behind the aft part of the vessel, it is, in some cases, desirable to be able to rotate the support of the foil upward and to the front when entering a harbor. In that case the foil and a frame for attaching the foil can be rotatable or foldable onto the deck of the vessel.

[0029] However, in many retrofit cases, it will be necessary to provide a construction in which a portion of the foil extends below the vessel. In new constructions, preference is given to the former variation in which a recess is formed in the hull at the site of the foil where the hull rearward from a certain point extends above the water (i.e., rearward from the point where the hull substantially leaves the water).

[0030] In a further embodiment, the hull near the aft end of the vessel includes floats or sponsons on both sides of the hull, wherein the foil extends between both sponsons and below the surface of the water. The hull between the sponsons extends at least partially above the surface of the water. In an embodiment, the hull comprises a recess between the sponsons within the confines of the sponsons and located aft of the front side of the recess which is substantially above the surface of the water. In particular during service, at that location, the hull is above the surface of the water. The foil is, however, located below the surface of the water.

[0031] With the current invention, in which the aft portion of the hull above the foil is entirely or in part above the surface of the water, a propelling force is successfully realized via the foil, wherein the disadvantageous effect of the acting low pressure on the hull of the ship at that location is counteracted.

[0032] The shape of the foil is preferably adapted to the shape of the submerged portion of the ship at the site of the foil (in vertical projection). For large vessels, the span of the foil is generally smaller than the width of the portion of the ship below the waterline, i.e. the foil preferably does not extend past the submerged portion of the ship, although this is theoretically possible.

[0033] It is preferred that the angle of the chord of the foil is adjustable with respect to the water surface during service for realizing an optimal effect.

[0034] The invention relates, to vessels with non-planing hulls, i.e. to vessels preferably

having a length of at least about 50m. More particularly, the present invention relates to a vessel having a relatively low speed, for instance corresponding to a Froude number of less than about 0.5.

Brief description of the drawings

[0035] The invention will be explained in greater detail below with reference to exemplary embodiments illustrated in the drawings, in which:

Fig. 1 schematically depicts a vessel not provided with the means according to the present invention;

Fig. 2A shows in side view a vessel according to earlier designs of the present inventor utilizing a foil;

Fig. 2B shows the vessel according to Fig. 2A in top view;

Fig. 2C shows the vessel according to Fig. 2A in rear view;

Fig. 3A shows a portion of a vessel comprising a first embodiment of the present invention, suitable for newly-built ships;

Fig. 3B is a rear view of the embodiment of Fig. 3A;

Fig. 4A depicts a second embodiment of the present invention constituting an improved variation of the construction shown in Fig. 2A and 2B, particularly suited for construction on both existing and newly-built ships;

Fig. 4B depicts a third embodiment constituting an alternative improved variation of the construction in Fig. 2A;

Fig. 5A shows a still further embodiment in which sponsons are used, in perspective view from the rear;

Fig. 5B is a side view of the embodiment of Fig. 5A;

Fig. 5C is a rear view of the embodiment of Fig. 5A;

Fig. 6 depicts an embodiment in which the hull bottom rises relatively steeply, which can occur particularly in full ships.

Detailed description of embodiments

[0036] In Fig. 1, reference numeral 1 denotes a conventional vessel in its entirety, provided with a hull 2 having a central or middle portion 3. Reference numeral 4 denotes the forward hull portion with a bulbous bow extension denoted by 6. In proximity to the aft hull portion of the vessel, denoted by 9, up to the stern 5 is located a low pressure region 7 which in addition to frictional drag, generates further hydrodynamic resistance.

[0037] Although not shown in Fig. 1, the transom at the stern or aft end 5 of the vessel sometimes projects above the waterline 10, such as in some sailing vessels and merchant ships. Also, the average angle α of the bottom of the aft hull portion 9, with respect to the horizontal which for zero vessel velocity in calm conditions would essentially be the water surface (depicted as 8), is depicted in Fig. 1.

[0038] Figs. 2A-2C depict previous efforts by the present inventor to improve ship performance using a foil. In Figs. 2A-2C, vessel 1 includes hull 2 with central portion 3, forward portion 4, and aft portion 9, having an aft end 5. Vessel 1, which is a sailing vessel-type as compared to the freight vessel-type shown in Fig. 1, is shown on surface 8 of a body of water, at conditions of zero hull velocity in the forward direction. The portion of the line representing water surface 8 on hull 2 also represents the waterline of vessel 1, as used in the subsequent discussion.

[0039] A foil 17 was fitted under vessel 1 below the water surface 8. Foil 17 was fixed in an immovable manner on the vessel by means of one or more supports 26. The distance between foil 17 and the hull 2 in the Fig. 2A embodiment was constant and is designated d. The length a of the foil at the position of the axis denoted CL (Fig. 2B) was approximately equal to the distance d. The length a of the foil decreased from the longitudinal centerline axis CL to the sides of the vessel, as can be seen from Fig. 2B. The longest length is indicated by L in Fig. 2A, while the shortest length is indicated by L_1 in Fig. 2B. This reduction of the length is obtained owing to the fact that the rear side of the foil was tapered. The breadth b of the foil (Fig. 2C) was at least four times, the length L of said foil.

[0040] As can be seen from Fig. 2A, the profile of foil 17 was of such a shape that it could cause a lifting force to be produced by the local flow rate at certain points (depicted schematically by arrows F), namely points where the local flow is directed obliquely upwards (and backwards). For certain foil orientations and positions, as subsequently determined, this lifting force is not purely vertical, but can be directed slightly forward. The resultant arising from this has a component in the forward direction.

[0041] In accordance with the present invention, which invention constitutes an improvement over the above-described constructions, a vessel for operating on a body of water comprising: a non-planing hull having a waterline and a longitudinal direction with a forward portion, an aft portion, and a central portion, the hull configured to have the aft portion with a smaller water displacement relative to a water displacement at the central portion; and a foil positioned proximate the end of the aft hull portion, and below the surface of the water, and spaced from the hull, the foil having a chord, and a leading edge and a trailing edge relative to a forward direction, wherein the leading edge of the foil is tilted at a downward angle relative to the horizontal, wherein the leading edge is positioned

less than or equal to about 0.5 times the chord length forward of a longitudinal location where the aft hull portion leaves the surface of the water, and wherein the foil has a chord and profile in longitudinal cross section, with a configuration to provide a lifting force, the tilt angle of the foil being measured with respect to the chord. In most of the present embodiments, the distance between the foil and the hull does not need to be constant. The foil can be straight.

[0042] A first embodiment of the invention is shown in Figs. 3A-3B, in which the vessel as a whole is denoted by 11, the hull by 12, and a foil 17 is attached below hull 12. Foil 17 has a chord length a which is about 2% to 10 %, preferably about 2% to 4 %, of the total length of vessel 11 at the waterline. The trailing end 17b of foil 17 is approximately even with the vertical tangent to the stern or transom 15. As may be seen from the drawing, hull 12 is provided at the site of foil 17 with a recess 16. Recess 16 includes a portion 18 with greater steepness, relative to the inclination of the bottom of the aft hull portion distant the recess (i.e., location 20 in Fig. 3A), and a free portion 19 above the surface of the water 8. The portion 18 forward of foil leading edge 17a is steeper than the usual approximately 8° to 16° in, for instance, merchant ships. It was found that an inclination or "rising" angle β of about 11 ° to about 25° has an advantageous effect.

[0043] The total length of the steeper portion 18 is from about 1.0 to about 1.5 times the total chord length of foil 17 in front of the leading edge 17a of foil 17. Foil 17 is positioned about 0.5 times the chord length of the foil 17 in front, up to about 0.75 times the chord of the foil 17 behind, the point where the water surface releases the hull (location 21, in Fig. 3A). The free part of step 19 will in general have a height of about 0.25 to about 0.75 times the chord length of the foil 17 above the water surface. The leading edge 17a of the foil 17 will be directed with a downward tilt with respect to the horizontal (water surface 8 in Fig. 3A) for the best result.

[0044] In the embodiment shown in Figs. 3A-3B, foil 17 is fastened to the headbox 13 of rudder 14. The foil 17 is at an angle γ with respect to the horizontal (~ water surface 8), and this angle γ is from greater than 0° to about 22°. The tangent line to the hull 12 at location 20 distant recess 16, is denoted by 20a. The line 20a is at an angle α of from 8° to 16° with respect to the horizontal.

[0045] The construction shown in Figs. 3A-3B is particularly practicable in the case of newly-built ships. The recess 16 may be formed at little additional cost. The position of the foil is such that there is little or no risk of damage during maneuvering (e.g. docking). Moreover, it has been found that a construction of this type does not negatively affect the tonnage of the vessel because technical installations, which may easily be regrouped, are usually present in the aft portion of the vessel. The construction shown in this case allows fuel consumption to be reduced by about 20% maximum. This means that in the case of relatively large vessels, in particular, i.e. vessels having a length of more than 50 meters, the cost recovery period is less than one year.

[0046] In Fig. 3B, a rear view of vessel 11 which depicts foil 17 being mounted to the fixed part (headbox) of rudder 14 and has been provided with additional streamlined struts 23, for strength.

[0047] Fig. 4A depicts an embodiment similar to Fig. 2A but with improved performance characteristics relative thereto. In Fig. 4A, the hull of the vessel denoted by 12 includes a stern or transom 15 that extends to the water surface 8. The foil is denoted by 17 and extends only partly below the hull, in proximity to the stern 15, the remainder being outside (rearward of) the vessel, i.e. beyond the stern 15. Reference numeral 23 denotes a streamlined strut with which foil 17 is fastened to the vessel. In this embodiment, the angle between the chord of foil 17 and the horizontal (again represented by water surface 8 in non-moving calm conditions) is between greater than 0° and about 12°. The length of the chord of the foil, as in the preceding example, is from approximately 2% to 10% of the length of the hull at the waterline. The leading edge 17a of foil 17 is positioned less than or equal to 0.5 times the chord length of foil 17 in front of the location where hull 12 leaves the water, in this case, along transom 15. The rear 17b of the foil is preferably located below the water surface 8 by a depth of from 0 to 0.75 times the length of the chord of foil 17.

[0048] The variation depicted in Fig. 4A may not only be applied to new constructions but also subsequently to existing vessels. In this case, too, a substantial propelling force is obtained and the low pressure region 7 at the relevant part of the aft hull portion is largely eliminated.

[0049] Fig. 4B shows an alternative variation which also is particularly suitable for subsequent application to existing ships. For this purpose, a support 36, to which foil 17 is fastened, is attached to the stern 35. This foil 17 extends entirely outside the vertical projection of vessel 11. The length of the foil preferably corresponds to the above-mentioned values, i.e. from about 2% to about 10% of the length of the hull at the waterline of the ship, depending on the size of the ship. The distance between leading edge 17a of the foil and the stern 35 of the vessel is about equal to the length of the chord of foil 17. The depth with respect to the surface of the water 8 at trailing edge 17b of the foil is approximately 0 to 0.5 times the length of the chord of the foil. In contrast to the earlier examples, the foil preferably has less downward tilt with respect to the horizontal, i.e. the chord of foil 17 is at a downward tilt angle γ of from greater than 0° to about 6°.

[0050] In order to obtain the beneficial effect in the embodiment of Fig. 4B, in general, the chord of the foil will be at a slightly upward angle with respect to the local flow of the water below the hull, in such a way that the peak of the wave which is normally created in the region aft of the stern during operation (i.e., forward movement of hull 12) will be lowered. In that case, the resistance will be lowered, as the foil 17 causes lift with a forwardly directed force component. The exact tilt angle of the foil 17 with respect to the horizontal (i.e., surface of water at zero hull velocity) depends, amongst other, on the flow behind the hull. In this embodiment, the tilt angle of the chord can even be adjustable for obtaining the most optimal effect during service.

[0051] Also, in the Fig. 4A and 4B embodiments, the struts 23 or struts 23 plus support 36 (Fig. 4B) can be liftable to up or above the hull in order to reduce the overall length of the vessel, for instance in a harbor. To that extent, the struts 23 or support 36 can be provided with a hinge 39, such as shown in Fig. 4B, to pivot the assembly of foil 17, struts 23, and

support 36 up and onto the deck. If necessary, a lock, for instance to the stern 15 or 35, could be provided.

[0052] In Figs. 5A-5C an embodiment of the invention is shown, in which the stern of the ship is provided with sponsons 41, 41' at the rear of the ship, particularly of interest for newly built ships. Between the sponsons the hull can rise steeply and/or be provided with a recess as shown in Fig. 3A. Preferably, the hull between the sponsons has a cross-section as shown and described with respect to Fig. 3A.

[0053] In Fig. 5A a perspective view from behind is shown, which shows in a schematic way such a vessel. Foil 17 can be mounted on and between sponsons 41, 41', as shown. In Fig. 5B, a longitudinal cross-section of such a vessel, the position of foil 17 is depicted with leading edge 17a behind the location where the hull would leave the water (at zero hull velocity), generally somewhere along hull bottom surface 48 or recess wall 21, depending on ship loading. Also, the "dynamic" waterline of the vessel during operation (forward movement) is depicted at 50 in Fig. 5B, showing an upward and rearward local flow in the vicinity of foil 17. Fig. 5C is a transverse cross-section and depicts possible mounting features including one or more struts 23, and rudder headbox 13.

[0054] Fig. 6 depicts a further embodiment of the invention for some existing ships such as a slow speed dredger or oil tanker fully loaded or for new ships, in which the aft end of the ship has a steeply rising bottom. Without foil 17 separation of the flow may occur. By proper placement of foil 17, the flow will not separate and keeps following the bottom of the hull. The trailing edge of the foil is here positioned up to 50% of the chord length below the hull and the leading edge relatively much closer (with respect to earlier shown embodiments).

[0055] It will be clear from the foregoing examples that various variations are possible within the scope of the concept of the invention. For example, features of the inventor's previous designs, as shown in Figs. 2A-2C can be adopted to the extent they are not inconsistent with the present invention. In addition, a person skilled in the art will understand that further modifications are possible within the scope of the inventive concept as set out above. Protection is however determined by the scope of the appended claims.

Patentkrav

1. Skib (1) til drift på et vandlegeme, omfattende:
et ikke-glidende skrog (2) med en vandlinje (10) og en længderetning med en fremadrettet del (4), en agterdel (9), og en midterdel (3), hvor skroget er konfigureret til at have en agterdel med en mindre vandforskydning i forhold til en vandforskydning ved midterdelen (3); og
en bærevinge (17), der er anbragt i nærheden af enden af skrogets agterdel (9), og i brug under vandets overflade, og anbragt med afstand til skroget (2), hvor bærevingen (17) har en korde, og en forkant (17a); og en bagkant (17b) i forhold til en fremadrettet retning,
hvor forkanten af bærevingen (17) under brug er vippet med en nedadgående vinkel i forhold til horisontalen, og
hvor bærevingen (17) har en korde og profil i længdetværsnit, med en konfiguration til at tilvejebringe en løftekraft, hvor hældningsvinklen af bærevingen (17) måles i forhold til korden, og
hvor bærevingen (17) er anbragt på en sådan måde, at ud over en opadgående løftekraft tilvejebringes der en fremadrettet fremdrivningskraft,
kendetegnet ved, at mindst halvdelen af korden af bærevingen (17) er bag en vertikal linje gennem den forbindelse, hvor agterdelen af skroget under brug forlader vandet.

2. Skib ifølge krav 1, hvor bærevingen (17) er under vandlinjen (10).

3. Skib ifølge krav 1 eller 2, hvor forkanten (17a) er anbragt under eller svarende til 0,75 gange kordelængden bag en langsgående lokation, hvor agterdelen (9) af skroget under brug forlader vandets overflade.

4. Skib ifølge et af de foregående krav, hvor bærevingen (17) er anbragt i den opadgående strøm af vand under agterdelen (9) af skroget under skibets sejlads.

5. Skib ifølge et af de foregående krav, hvor hældningsvinklen er større end nul og mindre end eller lig med ca. 22°.

6. Skib ifølge et af de foregående krav, hvor afstanden mellem bærevingens forkant (17a) og skroget (2) er ca. 0,2 til ca. 0,5 gange kordens længde.

7. Skib ifølge et af de foregående krav, hvor kordelængden er ca. 2% til ca. 10% af en længderetning af skroget ved vandlinjen (10).

8. Skib ifølge et af de foregående krav, yderligere omfattende en reces (16), der er udformet i skrogets agterdel (9) og strækker sig fremad fra agterenden, hvor den lokation, hvor skrogets agterdel (9) under brug forlader vandet, er anbragt indvendigt i et vertikalt fremspring (16), og hvor bærevingen (17) er anbragt i det mindste delvis indvendigt i et vertikalt fremspring af recessen (16).

9. Skib ifølge krav 8, hvor skroget (2) har en støtteponton (41, 41'), der er anbragt ved hver side af skroget ved agterdelen, hvor hver støtteponton definerer mindst én sidedel af recessen (16) og under brug strækker sig vertikalt under vandets overflade, hvor bærevingen (17) er monteret på og imellem støttepontonerne under vandets overflade.

10. Skib ifølge krav 8, hvor bærevingen (17) er anbragt, således at forkanten (17a) er fra mindre end eller lig med til ca. 0,5 gange kordelængden foran den lokation, hvor skrogets agterdel (9) under brug forlader vandet, til ca. 0,75 gange kordelængden bag den lokation, hvor skrogets agterdel (9) forlader vandet i længderetningen.

11. Skib ifølge et af de foregående krav, hvor en bundflade af skrogets agterdel (9) i et område i nærheden af agterdelen er skrå i forhold til bundfladen af skrogets agterdel fjernt fra agterenden, og hvor vinklen mellem horisontalen og tangenten til skroget (2) i det skrå område taget i det vertikale plan ved den langsgående position af bærevingens forkant (17a) er ca. 11° til ca. 25°.

12. Skib ifølge et af de foregående krav, hvor en del af bærevingen (17), som indeholder forkanten (17a), strækker sig under skrogets agterdel (9) foran den langsgående lokation, hvor skrogets agterdel (9) under brug forlader vandets overflade, hvor vinklen mellem horisontalen og tangenten til skroget

(2) ved den lokation, hvor skrogets agterdel (9) forlader vandet, taget i et vertikalt plan er ca. 8° til ca. 16°, og hvor en hældningsvinkel af bærevingen (17) er mindre end eller lig med ca. 12°.

13. Skib ifølge et af de foregående krav, hvor forkanten af bærevingen (17a) er skrå ved en nedadgående vinkel i forhold til horisontalen ved en vinkel, der er større end nul grader og mindre end eller lig med ca. 22°, og
hvor kordelængden er ca. 2% til ca. 10% af længderetningen af skroget (2) ved vandlinjen (10).

Fig 1

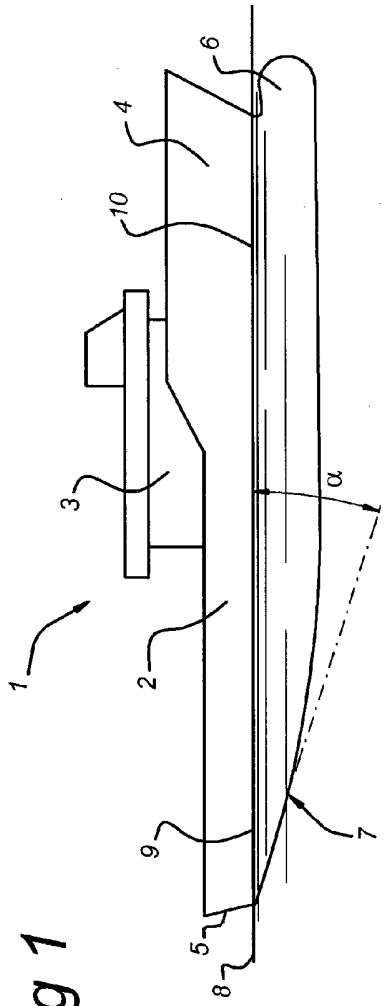

Fig 2a

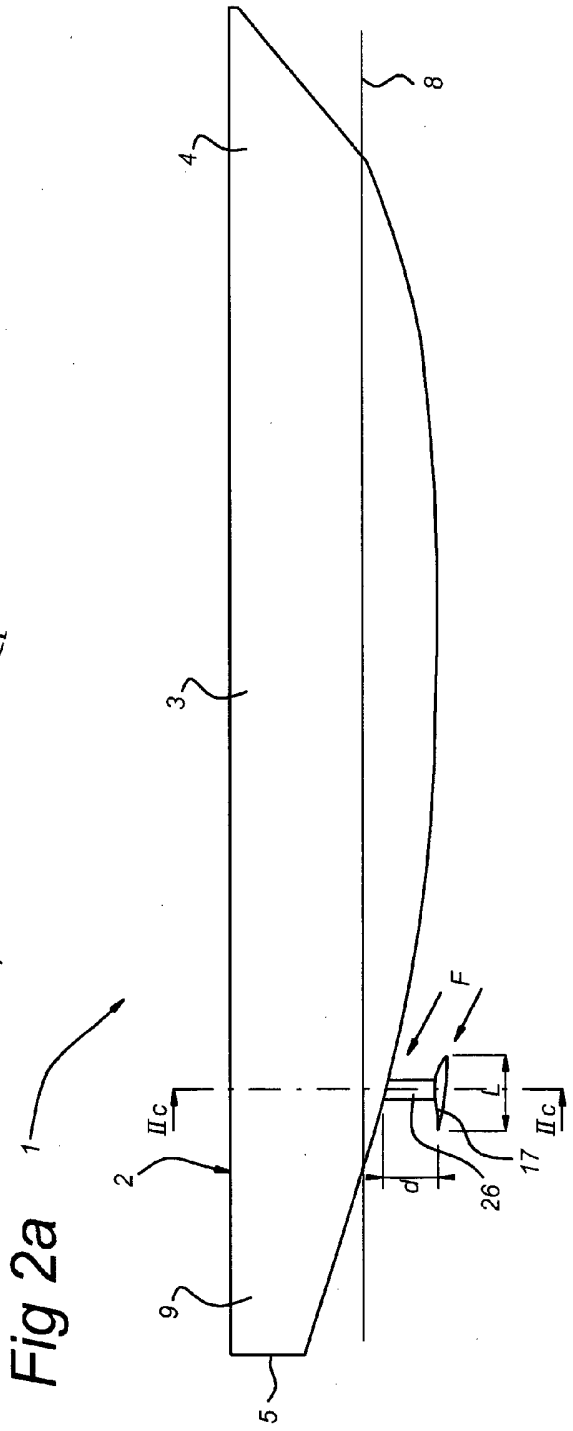

Fig 2b

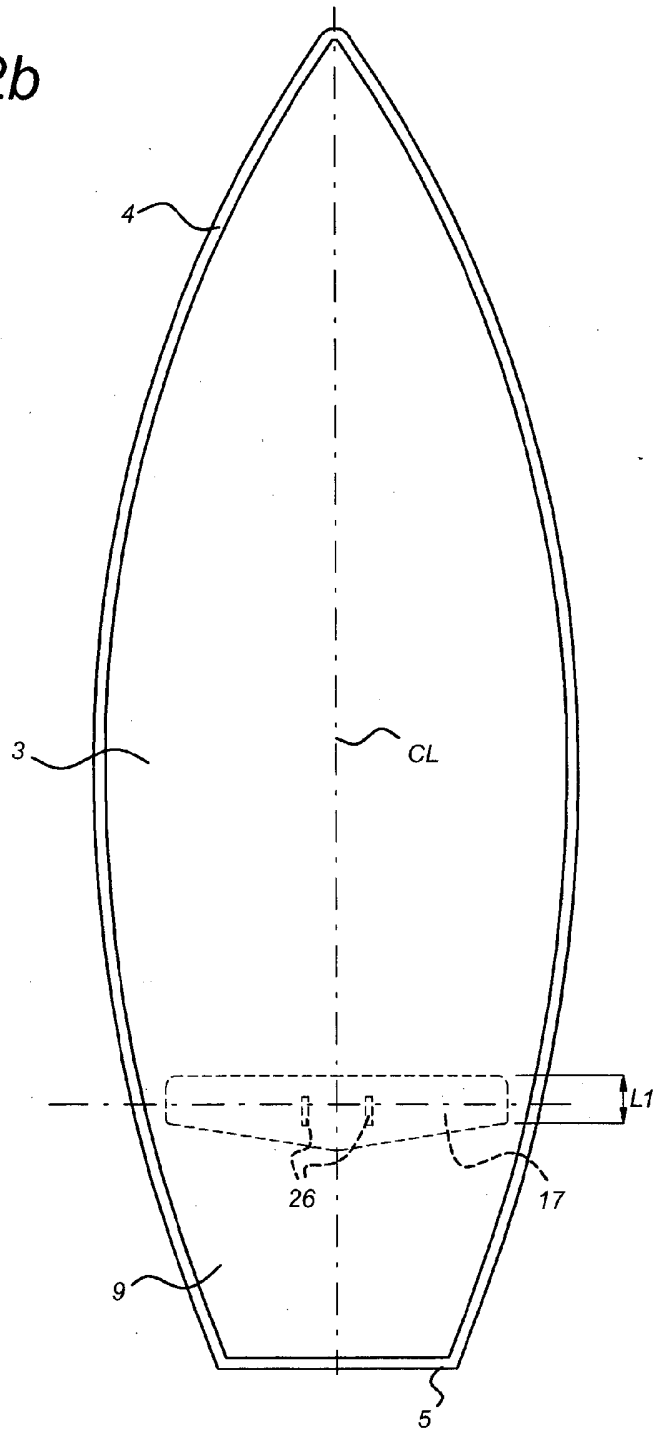

Fig 2c

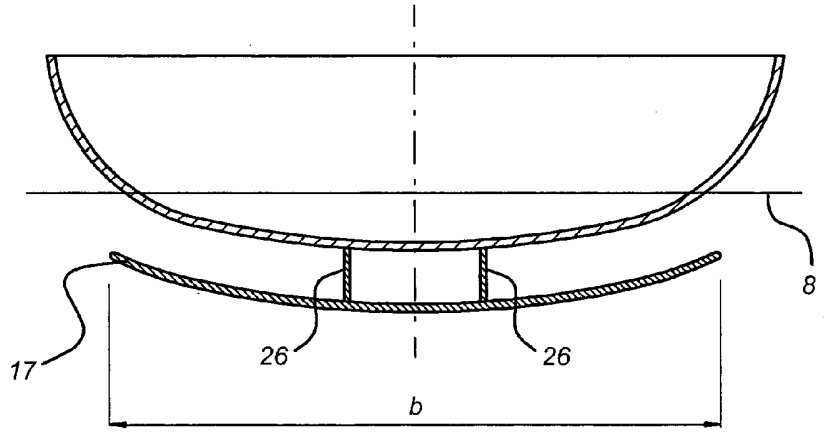

Fig 3a

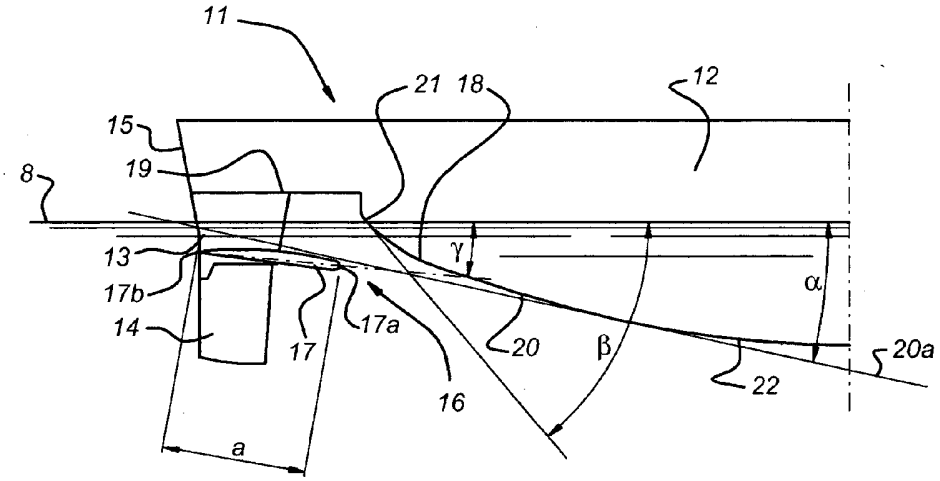

Fig 3b

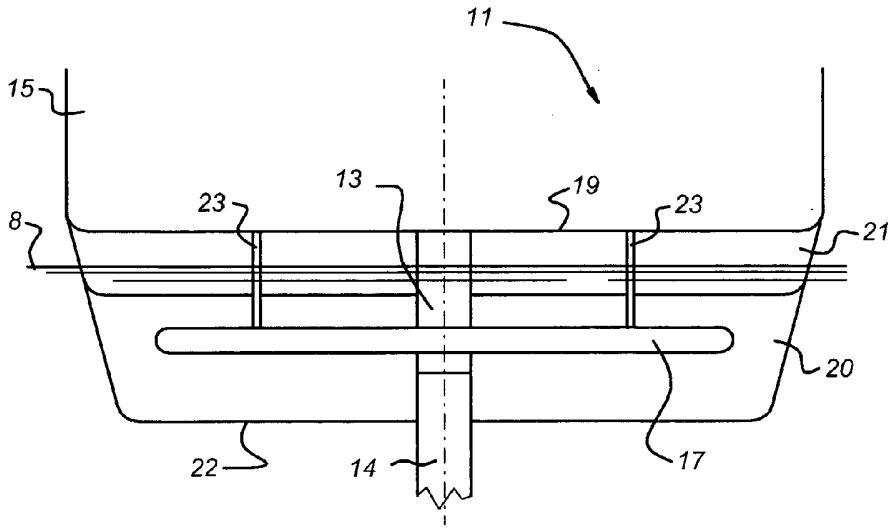

Fig 4a

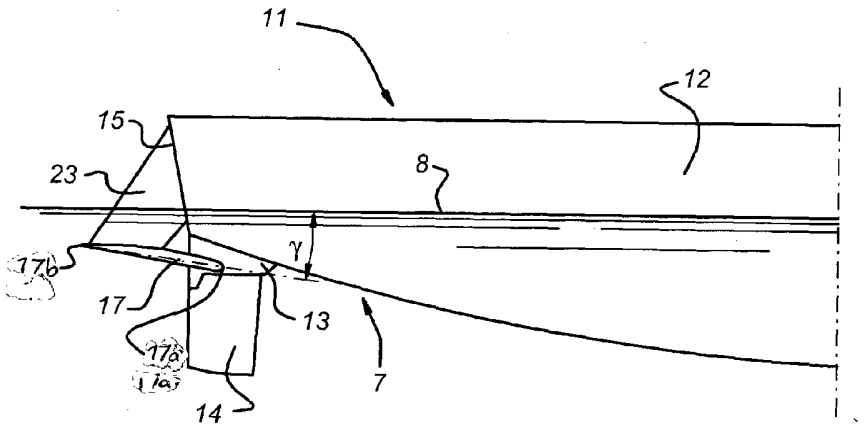
11
12
15
23
8
γ
17b
17
13
17a
1a
7
14

Fig 4b

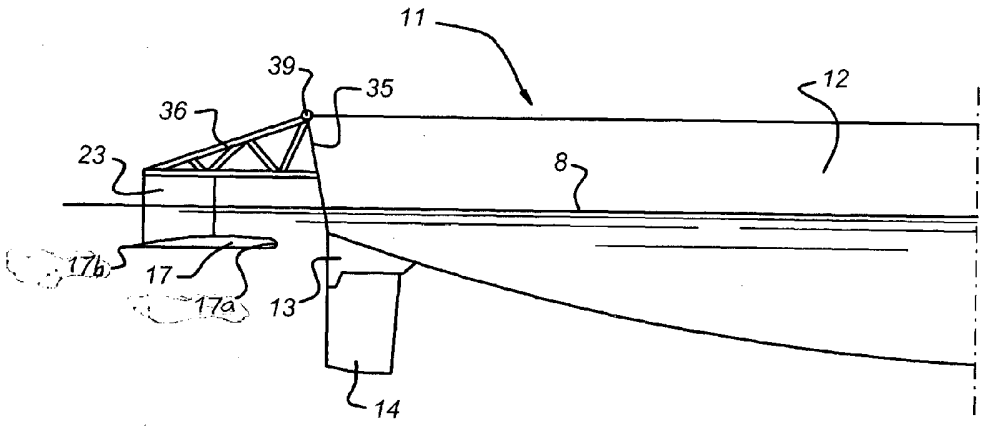
11
39
35
12
36
23
8
17b
17
13
17a
14

Fig 5a

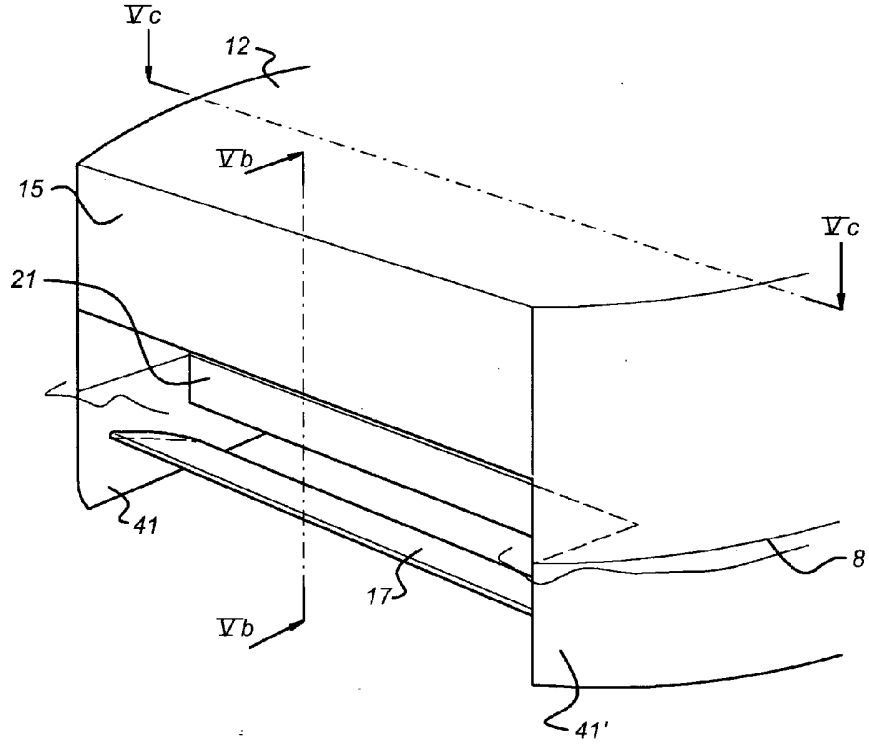

Fig 5b

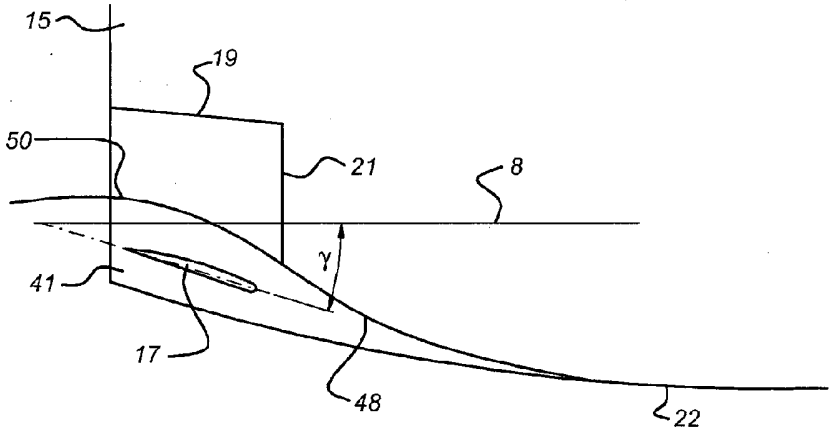

Fig 5c

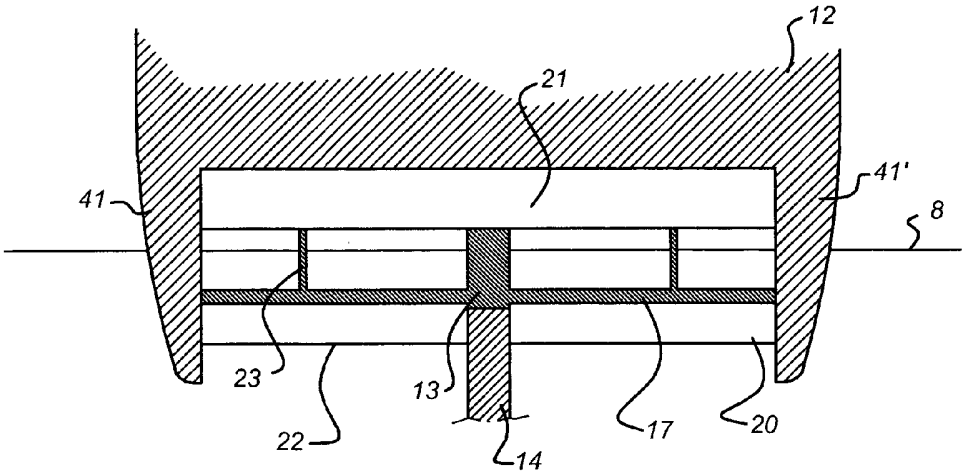

Fig 6

