US 20120100013A9

(19) **United States**

(12) **Patent Application Publication**

Narayanan et al.

(10) **Pub. No.: US 2012/0100013 A9**

(48) **Pub. Date: Apr. 26, 2012**

CORRECTED PUBLICATION

(54) **METHOD OF SURGE PROTECTION FOR A DYNAMIC COMPRESSOR USING A SURGE PARAMETER**

(76) Inventors: **Krishnan Narayanan**, Urbandale, IA (US); **Paul Reinke**, Elkhart, IA (US)

(21) Appl. No.: **12/777,445**

(22) Filed: **May 11, 2010**

Prior Publication Data

(15) Correction of US 2011/0280738 A1 Nov. 17, 2011
See Claim 20.

(65) US 2011/0280738 A1 Nov. 17, 2011

Publication Classification

(51) **Int. Cl.**
F04B 49/06 (2006.01)

(52) **U.S. Cl.** **417/53**

(57) **ABSTRACT**

A method of surge protection for a dynamic compressor that has a corresponding compressor map. A control system continually calculates an equivalent polytropic head parameter in order to define a surge limit line. The system then calculates a control parameter and determines the distance the control parameter to the surge limit line wherein the control parameter is dynamic to changes in compressor load and invariant to changes in suction conditions and gas compressibility. As a result of the distance of the control parameter to the surge limit line, the surge valve of a dynamic compressor is actuated to prevent surge.

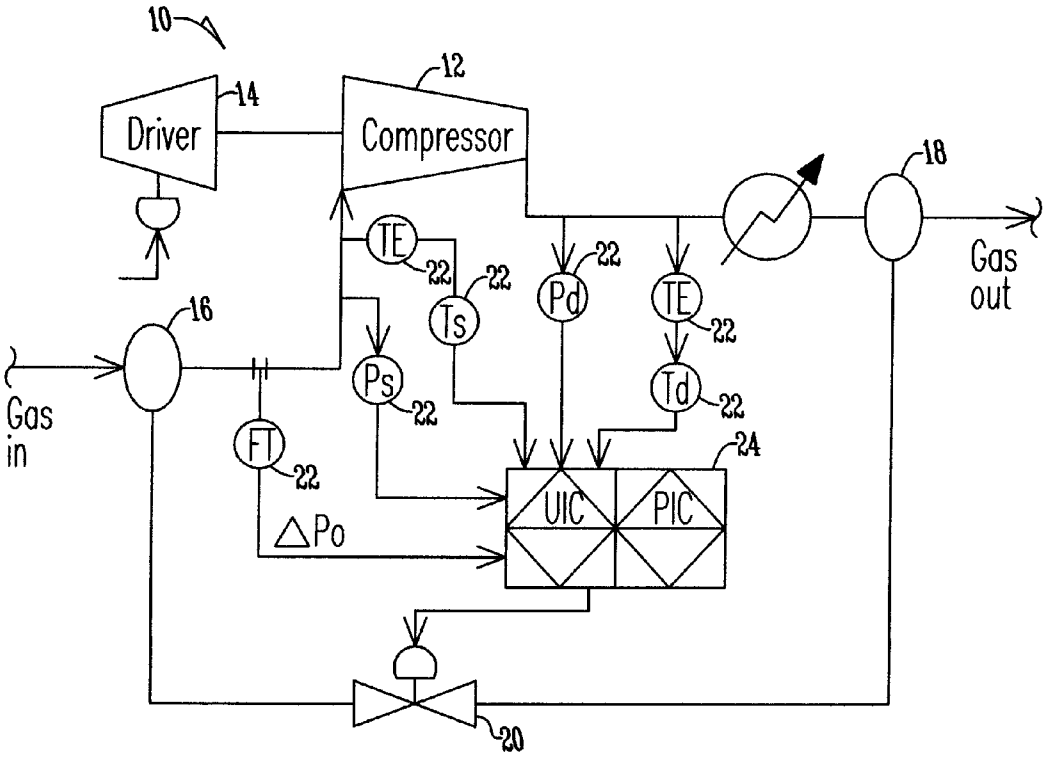

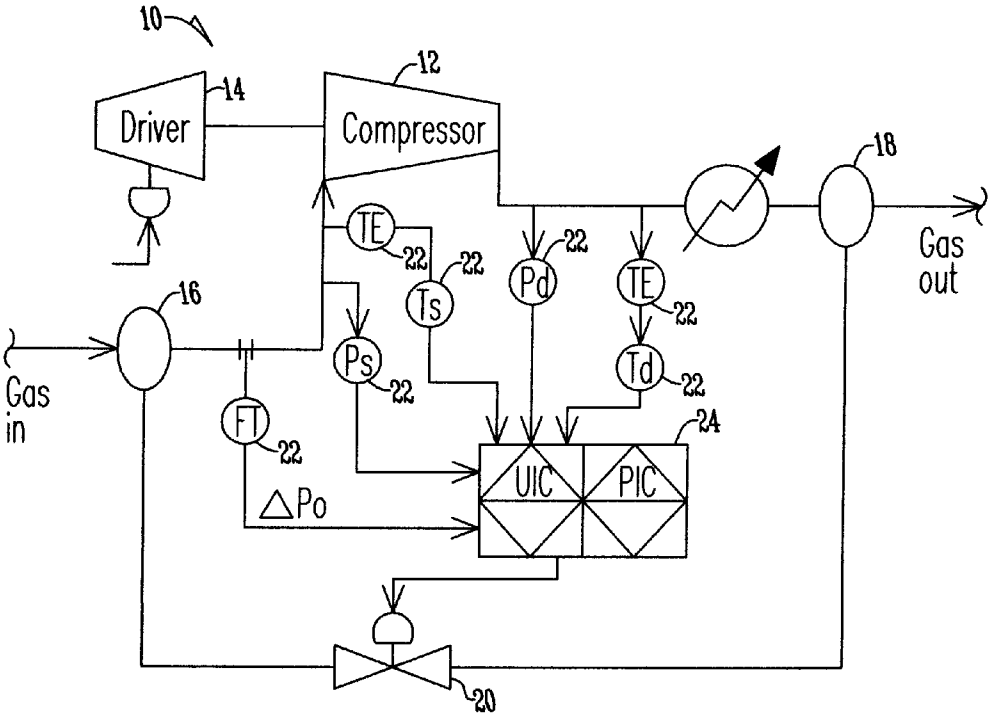
10
Driver
14
Compressor
12
18
Gas
out
TE
22
Ts
22
Pd
22
TE
22
16
Ps
22
Td
22
Gas
in
FT
22
24
UIC
PIC
ΔPo
20

Fig. 1

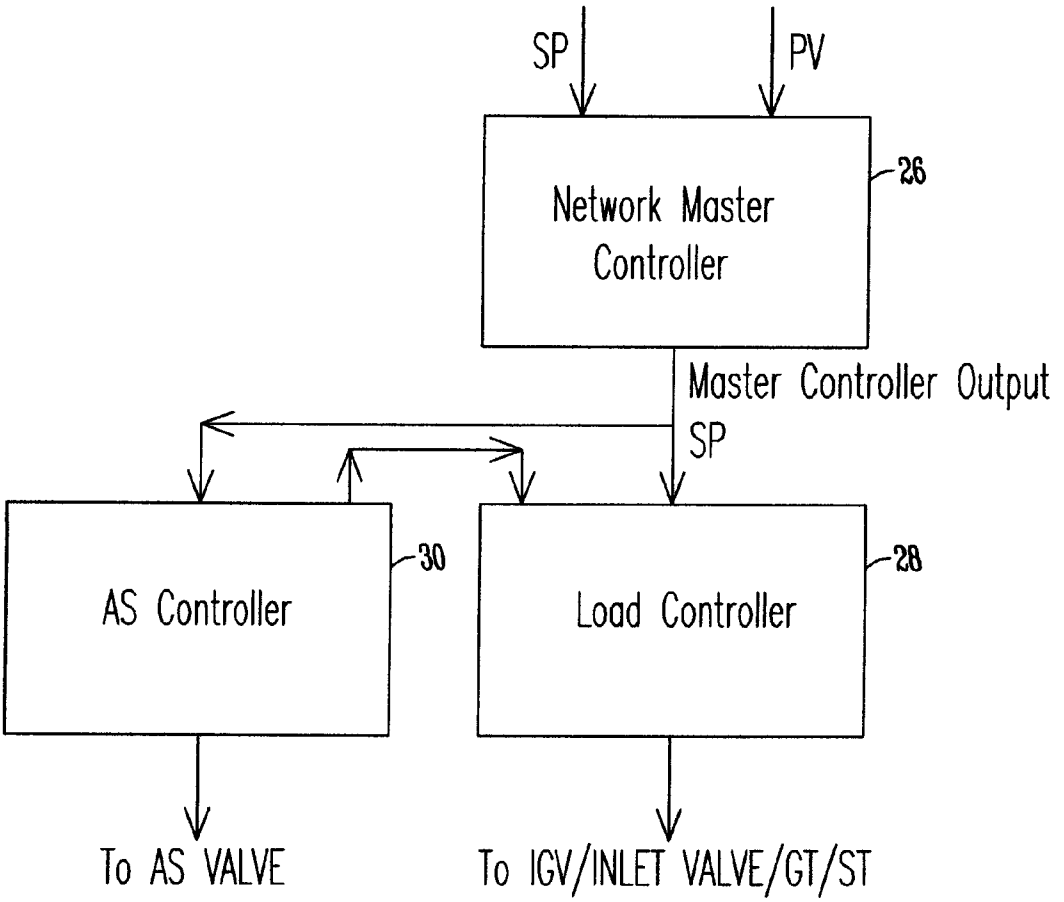
SP
PV
Network Master Controller
26
Master Controller Output SP
AS Controller
30
Load Controller
28
To AS VALVE
To IGV/INLET VALVE/GT/ST

Fig.2

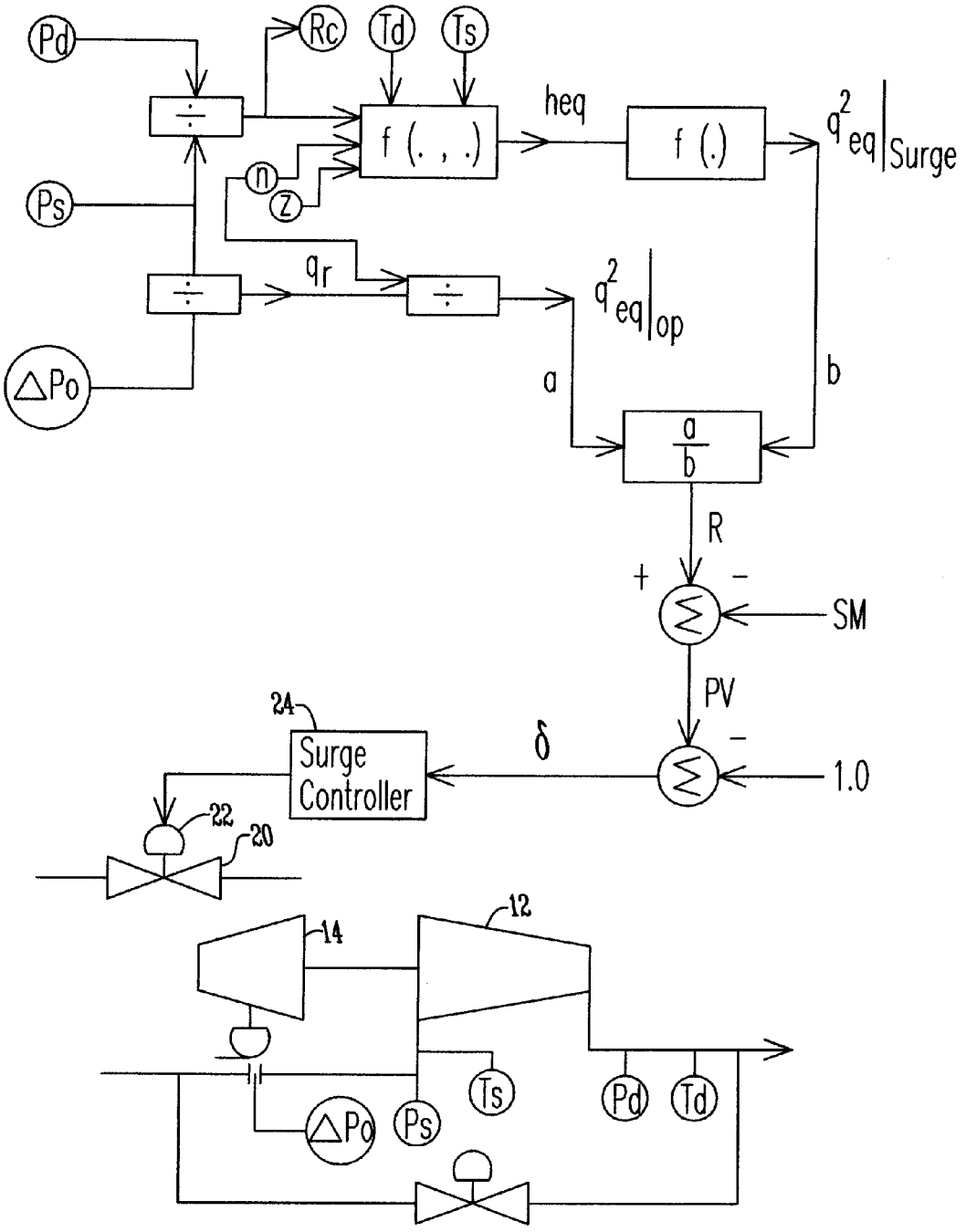
Pd
Rc
Td
Ts
heq
f (. , .)
f (.)
$q^2_{eq}|_{Surge}$
n
z
Ps
qr
$q^2_{eq}|_{op}$
ΔPo
a
b
a/b
R
+
−
SM
PV
−
1.0
δ
24
Surge Controller
22
20
12
14
Ts
Pd
Td
ΔPo
Ps

Fig. 3

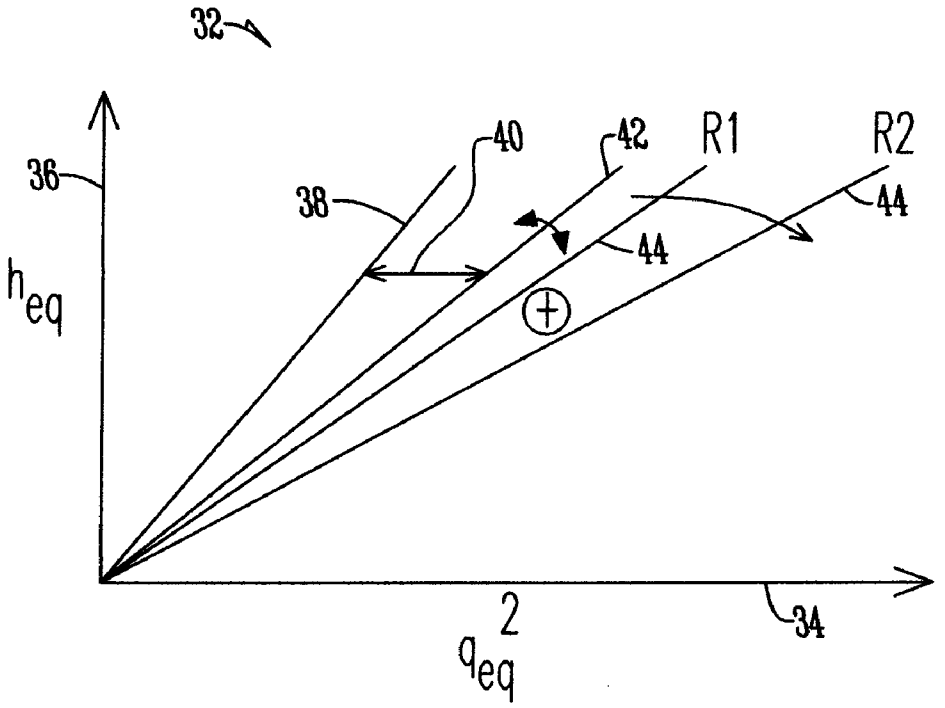

Fig. 4

METHOD OF SURGE PROTECTION FOR A DYNAMIC COMPRESSOR USING A SURGE PARAMETER

BACKGROUND OF THE INVENTION

[0001] The present invention is directed toward a dynamic compressor. More specifically, the present invention is directed toward a method of surge protection utilizing an equivalent map surge parameter.

[0002] A typical dynamic compressor has a gas inlet and a gas outlet wherein the compressor is driven by a compressor driver so that the gas, while flowing through the compressor, is compressed. A problem associated with dynamic compressors is the amount of gas that passes through the compressor. Specifically, if an insufficient amount of gas flows through the compressor, a surge occurs within the system causing damage to the compressor. Because of the high price of compressors great care must be taken to ensure that compressors are not damaged.

[0003] To minimize damage to compressors as a result of lack of gas flow at an inlet an anti-surge or recycling valve is utilized by dynamic compressors to take gas from the outlet of the compressor and recycle it back to the inlet of the compressor to ensure that there is always sufficient gas flowing though the compressor to prevent surges from occurring.

[0004] As a result of the need to protect against surge, control systems have been provided to control the operation of the anti-surge valve. Compressor surge control systems (also known as anti-surge controllers) use a PID controller for regulating the anti-surge valve when flow rate decreases below a predefined point.

[0005] Control systems in the art monitor the dynamic compressor system and determine a corresponding compressor map as can be seen in U.S. Pat. No. 4,156,578 to Agar and U.S. Pat. No. 4,949,276 to Staroselsky. In both references, a function of volumetric flow at the inlet of the compressor is charted against the polytropic head of the compressor to determine a surge line or surge limit line. The surge limit line represents the line on the graph that once passed (a point immediately to the left of the surge limit line) surging of a compressor can occur. Thus, to prevent surging a safety margin is determined and a surge control line is plotted to the right of the surge limit line. The control system then continuously calculates a control parameter that measures a distance to the surge limit line. If the control parameter reaches or is to the left of the surge control line, the controller actuates the anti-surge valve to increase gas flow through the compressor to prevent the control parameter from reaching the surge limit line and causing a surge within the compressor.

[0006] Problems in systems such as that taught by Agar and Staroselsky exist because measuring the volumetric flow and the polytropic head in practice is not practical. There are problems associated with molecular weight and gas density determinations causing these measurements to be inadequate for real time surge protection. Hence, controllers in the industry employ either fan law method or use similitude theory to derive surge control parameters that in theory are invariant to changes in suction conditions or gas composition. However, existing methods for invariant parameter calculations do not completely account for variability in gas compressibility or gas specific heat ratio. As a result, variations in gas composition tend to make the surge parameter and surge limit line move resulting in operating problems. In addition, existing methods for the distance to surge calculation method is dynamically insensitive or sluggish especially as the compressor load increases. Thus, for the existing methods, changes in distance to the surge line is smaller for a given change in compressor load.

[0007] Therefore, a principal objective of the present invention is to provide a method of surge protection for a dynamic compressor that prevents damage to the dynamic compressor.

[0008] Yet another objective of the present invention is to provide a method of surge protection for a dynamic compressor that accounts for multiple variables in determining a control parameter.

[0009] These and other objectives, features, or advantages of the present invention will become apparent from the specification and claims.

BRIEF SUMMARY OF THE INVENTION

[0010] A method of surge protection for a dynamic compressor having a corresponding performance map. The method includes continually calculating an equivalent polytropic head parameter and an equivalent flow parameter. Next, the method involves defining a surge limit line on the compressor map as a function of the equivalent polytropic head parameter. Then a control system continually calculates a distance a control parameter is from the surge limit line wherein the control parameter is dynamic to changes in compressor load. Based on the distance an anti-surge valve is adjusted.

BRIEF DESCRIPTION OF THE DRAWINGS

[0011] FIG. **1** is a schematic diagram of a dynamic compressor;

[0012] FIG. **2** is a block diagram of a control system of a dynamic compressor;

[0013] FIG. **3** is a schematic diagram of a surge control system of a dynamic compressor; and

[0014] FIG. **4** is a graph having equivalent flow squared versus equivalent polytropic head.

DETAILED DESCRIPTION OF THE PREFERRED EMBODIMENT

[0015] FIG. **1** shows a dynamic compressor **10** that includes a compressor **12** that is driven by a compressor driver **14**. The compressor driver is of any type including a motor, gas turbine, steam turbine, expander or the like. The compressor **12** has a gas inlet **16** and a gas outlet **18** wherein gas flows through the compressor **12** to be compressed. An anti-surge or recycle valve **20** is fluidly connected between the gas inlet **16** and gas outlet **18** so that when the anti-surge valve **20** opens a fluid flow path exists to convey gas from the gas outlet **18** to the gas inlet **16**. A plurality of sensors **22** including pressure sensors, temperature sensors, flow measurement sensors and the like are placed throughout the dynamic compressor **10** in order to determine processed conditions for the components of the dynamic compressor including the compressor **12**, the driver **14**, the gas inlet **16**, and gas outlet **18** and the anti-surge valve **20**. The plurality of sensors **22** are electrically connected to the control system **24** where the control system **24** is in communication with all of the components of the dynamic compressor and controls the opening of the anti-surge valve **20**.

[0016] FIG. **2** shows a control system **24** used for a dynamic compressor **10**. Specifically, a controller **26** such as a Network Master controller is utilized in combination with a load controller **28** that monitors the inlet **16** of the dynamic compressor **10** and a surge controller **30** that monitors and operates the anti-surge valve **20**. The arrangement and set up of the

control system **24** shown in FIG. **2** is merely an example of a control system **24** for a dynamic compressor **10** and is shown as exemplary. Specifically, other control arrangements that utilize Master controllers, load controllers, and surge controllers in series cascade and parallel cascade can be used without falling outside the scope of the present invention.

[0017] FIG. **3** is yet another exemplary embodiment of the control system **24** used with another dynamic compressor **10**. In this embodiment the station and load controllers are not used and instead the control system **24** takes readings straight from the plurality of sensors **22** to determine an input to the surge valve **20**.

[0018] The control system **24** of the present invention, like prior art control systems, determines a compressor map that corresponds to the dynamic compressor **10** as best shown in FIG. **4**. In the present invention the compressor map **32** presents a horizontal axis **34** that measures the square of an equivalent flow q^2_{eq} and has a vertical axis **36** that presents an equivalent polytropic head. On the map **32** is a surge limit line **38** that is calculated by the control system **24** wherein at points to the left of the surge limit line **38**, surge within the dynamic compressor **10** typically occurs. Spaced at a predetermined distance that is considered a safety margin **40** is a surge control line **42** wherein when a control parameter reaches a point either on or to the left of the surge control line **42** the control system **24** actuates the anti-surge valve **20** to provide flow through the anti-surge valve **20**. Additionally seen on the map **32** are operating control lines **44** that represent additional control lines that are used if the safety margin **40** is desired to be increased to protect against a surge within a compressor.

[0019] The compressor map **32** of the present invention is an equivalent compressor map wherein instead of attempting to measure inlet volumetric flow and apply it against polytropic head the present invention calculates an equivalent flow parameter q^2_{eq} and an equivalent polytropic head parameter h_{eq} Specifically:

$$q^2_{eq} = \frac{Q^2}{V_c^2}$$

$$q^2_{eq} = \frac{Q^2}{(nZRT)}$$

and:

$$h_{eq} = \frac{H_p}{V_c^2} = \frac{H_p}{(nZRT)}$$

wherein:

$$V_c^2 = nZRT = \frac{dP}{d\rho}$$

Where:

[0020] Q=volumetric flow
[0021] V_c=sonic velocity of gas at flow conditions
[0022] H_p=polytropic head
[0023] n=polytropic exponent

$$R = \frac{Ro}{MW}$$

where Ro is the universal gas constant and MW is molecular weight

[0024] Z=compressibility of gas at flow conditions
[0025] T=temperature of gas at flow conditions

Thus, because, for a polytropic compression process:

[0026] P_v^n=constant and

$$\frac{P}{\rho^n} = \text{constant}$$

Where:

[0027] P=pressure at flow conditions
[0028] ρ=gas density at flow conditions
[0029] v=specific gas density at flow condition

Therefore:

[0030]

$$q^2_{eq} = c_1 \frac{\Delta Po}{P} * \frac{1}{n} = \frac{q^2_r}{n}$$

$$h_{eq} = c_2 \frac{\left[R_c \frac{n-1}{n} - 1\right]}{\frac{n-1}{n}} * \frac{1}{n} = \frac{h_r}{n}$$

Where:

[0031] c_1 and c_2 are constant
[0032] R_c=pressure ratio across the compressor
[0033] ΔPo=differential pressure across flow measuring device

so

$$h_r = c_2 \frac{\left[R_c \frac{n-1}{n} - 1\right]}{\frac{n-1}{n}}$$

and

$$q^2_r = c_1 \frac{\Delta Po}{P}$$

Thus, if variations in n are neglected then invariant surge limit parameters are q^2_r and h_r,

Therefore, a surge parameter is represented by:

$$P{:}q^2_{eq}|\text{surge} = f(h_{eq})$$

and surge limit line=f(h_{eq})

[0034] In addition to the above a control parameter (R) is defined as the process variable for surge controller **24** and shown as:

$$R = \frac{q^2_{eq} \mid op}{q^2_{eq} \mid \text{surge}} - SM$$

$$= \frac{q^2_{eq} \mid op}{f(h_{eq})} - SM$$

Where:

[0035] $q^2_{eq}|op$=the equivalent volumetric flow parameter at an operating condition

[0036] $q^2_{eq}|surge$=the equivalent volumetric flow parameter at a surge condition

[0037] $f(h_{eq})$=a function of the equivalent polytropic head

[0038] SM=surge margin set point

so that when R≧1.0 anti-surge control valve **20** is closed and when R<1.0 the anti-surge recycle valve **20** is open.

[0039] In addition, the control system **24** determines the distance to the surge control line δ:

$$\delta=[((q^2_{eq}|op)/f(h_{eq}))-SMJ-1=(R-1)$$

so when δ is ≧0 the valve is closed and when δ is <0 the valve is open. Thus the surge controller acts on δ to actuate the surge valve and prevent surge.

[0040] In operation, as the dynamic compressor **10** is operating the control system **24** continually monitors the dynamic compressor **10**. The control system **24** continually calculates an equivalent polytropic head parameter and an equivalent flow parameter in the manners discussed above. A surge limit line **38** is defined on the compressor map **32** as a function of the equivalent polytropic head parameter. The control system **24** continually calculates a distance **5** that a control parameter R is from the surge limit line **38** wherein the control parameter is dynamic to changes in the compressor load. Then, as a result of the distance the control parameter is from the surge limit line the control system **24** actuates the anti-surge valve **20** accordingly.

[0041] Thus, provided is a dynamic compressor control system that utilizes an equivalent compressor map **32** to improve upon the state of the art. The equivalent compressor map **32** bases a surge parameter on the polytropic compression process equation and modeling of the dynamic compressor **10** based on flow, pressure, speed (or inlet guide vane), compressibility and temperatures of the dynamic compressor **10**. The equivalent polytropic head parameter and equivalent flow parameter are based on the dynamic similitude theory, a mach number determination using sonic velocity of gas at flowing conditions and gas compressibility.

[0042] When determining control parameter (R), the parameter is dynamic to changes in compressor load, both in the increasing and decreasing direction. Therefore, presented is a control parameter that has high dynamic sensitivity along with invariance of the surge equivalent parameter due to changes in suction pressure, temperature, gas composition, rotation speed or inlet guide vane geometry. Thus, at the very least all of the stated objectives have been met.

[0043] It will be appreciated by those skilled in the art that other various modifications could be made to the device without departing from the spirit and scope of this invention. All such modifications and changes fall within the scope of the claims and are intended to be covered thereby.

What is claimed is:

1. A method of surge protection for a dynamic compressor having a corresponding compressor map steps comprising:

continually calculating an equivalent parameter with a controller;

defining a surge limit line on the compressor map as a function of the equivalent parameter;

continually calculating a distance a control parameter is from the surge limit line, wherein the control parameter is dynamic to changes in compressor load; and

actuating an surge valve based on the distance.

2. The method of claim **1** wherein the equivalent parameter is an equivalent polytropic head parameter.

3. The method of claim **2** wherein the equivalent polytropic head is a function of

$$\frac{Hp}{V_c^2}$$

where Hp is polytropic head and V_c^2 is equal to NZRT where N is a polytropic exponent, R is equal to

$$\frac{Ro}{MW}$$

where Ro is a gas constant and MW is molecular weight and T is the temperature of gas at flow conditions at the compressor.

4. The method of claim **2** wherein the surge limit line is defined based on the polytropic compression process equation, Pv^n=constant.

5. The method of claim **2** wherein the surge limit line is defined based on modeling of the compressor based on flow, pressure, speed, compressibility and temperature.

6. The method of claim **2** wherein the equivalent polytropic head parameter is based on similitude theory.

7. The method of claim **2** wherein the equivalent polytropic head parameter is based on polytropic head correction using sonic velocity of gas at flowing condition of the compressor.

8. The method of claim **2** wherein the equivalent polytropic head parameter is based on gas compressibility.

9. The method of claim **2** wherein the equivalent polytropic head parameter is based on n=constant.

10. The method of claim **1** wherein the control parameter is determined based on an equivalent flow parameter.

11. The method of claim **10** wherein the equivalent flow parameter is a function of q^2_{eq} wherein q^2 equals

$$\frac{Q^2}{V_c^2}$$

where Q is volumetric flow and V_c is the sonic velocity of gas at flowing conditions.

12. The method of claim **10** wherein the equivalent flow parameter is based on similitude theory.

13. The method of claim **10** wherein the equivalent flow parameter is based on mach number determination using sonic velocity of gas at flowing condition of the compressor.

14. The method of claim **10** wherein the equivalent flow parameter is based on gas compressibility.

15. The method of claim **10** wherein the equivalent flow parameter is based on n=constant.

16. The method of claim **1** wherein the control parameter is determined based on $R=(q^2_{eq}|op)/(q^2_{eq}|surge)$ where $q^2_{eq}|op$=an equivalent volumetric flow parameter at an operating condition and $q^2_{eq}|surge$=an equivalent volumetric flow parameter at a surge condition.

17. The method of claim **1** wherein the distance a control parameter is from the surge limit line is determined based on the control parameter and is a function of $[((q^2_{eq}|op)/f(h_{eq}))-1]$ where $q^2_{eq}|op$ is an equivalent flow parameter at an operating condition and $f(h_{eq})$ is a function of the equivalent polytropic head parameter.

18. The method of claim **17** wherein when the distance a control parameter is from the surge limit line is greater than 0 then the compressor is operating to the right of the surge limit line and when the distance a control parameter is from the surge limit line is less than or equal to 0 then the compressor is operating to the left of the surge limit line.

19. The method of claim **1** further comprising the step of continually calculating a distance the control parameter is from a surge control line.

20. The method of claim **19** where the surge control line is determined based on the control parameter and is a function of $[((q^2_{eq}|op)/f(h_{eq}))-SM]-1$ where $q^2_{eq}|op$ is the equivalent flow parameter at an operating condition, $f(h_{eq})$ is a function of the equivalent polytropic head parameter defining the surge limit line and SM is the safety margin.

21. The method of claim **20** wherein when the distance a control parameter is from the surge control line is equal to or greater than 0 the surge valve is closed and when the distance the control parameter from the surge control line is less than 0 the surge valve is opened.

* * * * *