Feb. 8, 1949. G. L. DREHER 2,461,317

BOTTLE CARRIER

Filed May 31, 1946

FIG 1

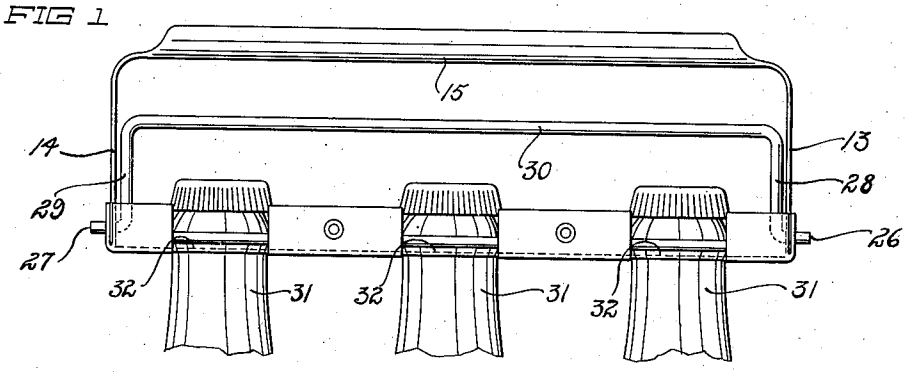

FIG 2

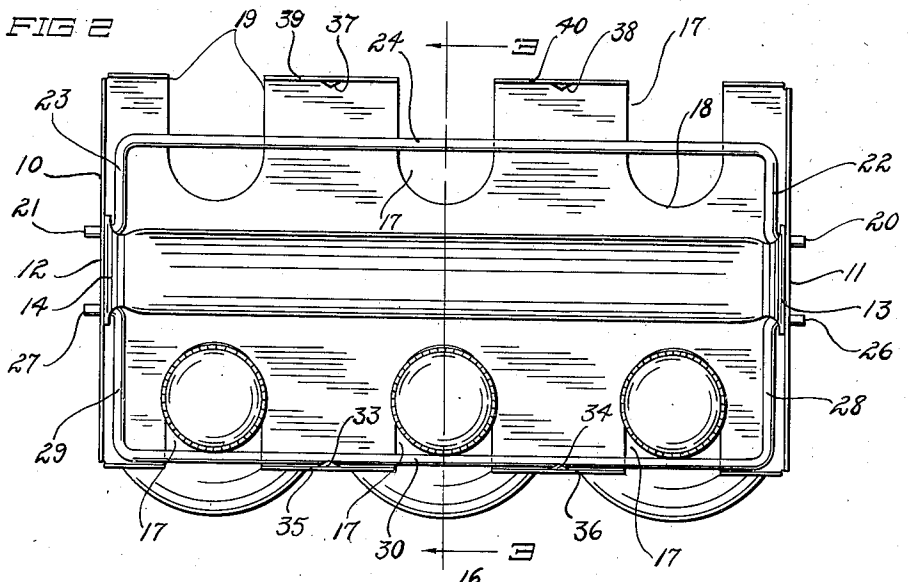

FIG 3

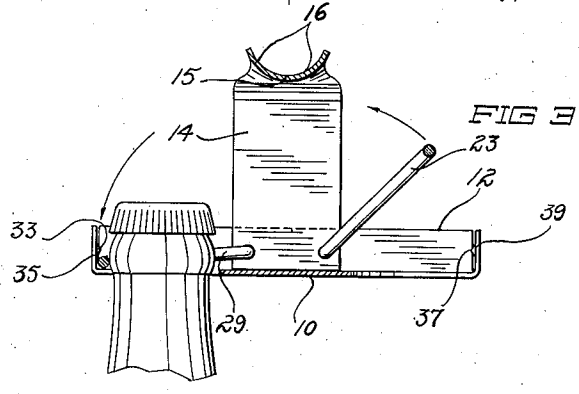

INVENTOR.
Godfrey L. Dreher

BY A. A. Whiteley

Attorney

Patented Feb. 8, 1949

2,461,317

UNITED STATES PATENT OFFICE

2,461,317

BOTTLE CARRIER

Godfrey L. Dreher, Minneapolis, Minn.

Application May 31, 1946, Serial No. 673,310

5 Claims. (Cl. 224—45)

1

My invention relates to a holder and carrier for bottled goods such as bottles of Coca Cola and the like, and has for its object to provide a carrying device, preferably all metal, which will receive a predetermined number of filled bottles, as illustrated six of such bottles, and will hold them in such manner that they cannot be misplaced or come away from the holder no matter how they may be positioned, whether vertically, up-side-down or on their sides.

Heretofore means have been employed for carrying bottled drinks wherein a group of bottles has been contained in a paper holder or semi-carton. A serious difficulty has been encountered in this form of device by reason of the fact that the bottles have tended to become disassociated with the holder so that one or more of them come out of the holder. Also, the holder being of paper has a tendency to tear or otherwise go to pieces.

I have discovered a simple but efficient means of securing a group of bottles in a holder in such manner that they may be carried in any way or deposited in any way as for example upon the floor of an automobile and they will remain connected with the holder and movable to be carried to any point of ultimate deposit.

I further discovered that this arrangement may very simply be made to permit the bottles to be suspended from their necks, where they are held readily available for easy release, and where they can not be released from the holder no matter how the holder itself and the bottles held thereby may individually be positioned.

I discovered that this may be effected by providing an all metal device having a base plate with a series of slots extending outwardly through the edge thereof, each of said slots adapted to receive the neck of a bottle, as a bottle for a soft drink such as Coca Cola, to hold the bottle suspended from said plate by said neck, and to make swinging hasp-like members which come over the necks of the bottles and hold them from movement along the slots for release.

It is a principal object of my invention therefore to provide a holder comprising a handle and a suspended plate, said plate having a series of oppositely extended notches in the edges thereof adapted to receive the necks of the bottles of a soft drink such as Coca Cola.

It is a further object of my invention to mount on said plate or above it or connected with it locking means, which may be in the form of swinging U-pieces that may be swung over the tops of the bottle ends positioned in the slots in the base plate and when pressed down upon the plate will

2

effectively prevent movement of the bottle necks from said slot.

It is a further object of my invention to form the bottom plate with upstanding flanges along its sides through which said slots extend and to form pivoted or swinging U-pieces adapted to be swung over the tops of the bottles to come behind the bottle necks and the upstanding flanges.

It is a further object of my invention to provide on said flanges extensions or detents past which the U-piece may be sprung to lock the U-piece in position so that they will continue to hold the bottle necks from removal from the holder until the U-pieces are sprung into an upright position.

The full objects and advantages of my invention will appear in connection with the detailed description thereof which will now be given in the appended specification, and the novel feature of my invention whereby the above noted useful and advantageous results are obtained will be particularly pointed out in the claims.

In the drawings:

Fig. 1 is a side elevation view of my invention with a set of bottle necks locked in position in the holder base.

Fig. 2 is a plan view of my invention showing bottle necks on one side locked into place and showing the U-piece swung up on the other side of the holder plate.

Fig. 3 is a sectional elevation view taken on line 3—3 of Fig. 2.

As illustrated, a base plate 10 is provided with end flanges 11 and 12 to each of which is secured, respectively, legs 13 and 14 of a handle member. The transverse portion 15 of this handle member is curved as indicated at 16 in Fig. 3, thus giving a bulged hand hold on its under side for lifting and carrying the bottle holder and any bottles therein.

The base member 10 is formed with a multiplicity of slots 17, which have curved inner ends 18 toward the longitudinal center of the base plate 10 and which open through the sides of said base plate as indicated at 19. The slots 17 are therefore open-ended slots extending inwardly at right angles to the lonigtudinal central line of the base plate 10.

Pivoted at 20 and 21 through the handle legs 13 and 14 and flanges 11 and 12, respectively, are arms 22 and 23 which extend at right angles to the central member 24 of a U-piece clamp. Similarly pivoted at 26 and 27 are the arms 28 and 29 of a second U-piece holder 30. The two U-piece removing bars 24 and 30 are adapted to be swung upwardly to a position under the handle post 15

as clearly indicated in Fig. 3 which is the position they will occupy while bottle necks 31 are inserted in the slots 17. Each of these bottles includes a ridge portion 32, Fig. 1, which is somewhat larger in diameter than the width of the slots 17.

After a row of bottles has been inserted in slots 17 as indicated in the lower part of Fig. 3, U-piece 30 (U-piece 24 for the other side) is swung down over the bottle neck extensions until it is sprung past projections 33 and 34 on the flange members 35 and 36 which snap over the locking bar 30 and hold it in position to prevent any possible removal of the bottle necks 31 from the slots 17.

Similarly on the other side of the holder and carrier are projections 37 and 38 upon flange members 39 and 40 which are adapted to similarly receive the locking bar of U-member 24.

In use my bottle holder and carrier provides the simplest possible means of securing the necks of bottles of soft drinks such as Coca-Cola, in position where they can be carried and moved about with no possibility of getting out of the holder. Thus it is only necessary to slide the bottle necks into the series of slots 17 on both sides of the plate 10 and quickly swing the U-piece locking bars 24 and 30 into the position indicated at the bottom of Fig. 2 and the left of Fig. 3 and the bottles are in position to be carried and thereafter to be held and transported in any way without possibility of any of the bottles becoming displaced from the holder. This is a very great advantage for holding and conveying groups of bottles containing soft drinks.

A further advantage is that the entire constuction can be made very cheaply and can be used to rapidly and easily apply, transport, store and remove the bottles. But the most important advantage of all is the certainty with which the filled bottles are united to the holder and equally the certainty that they will remain united no matter how the bottles are positioned or handled until it is desired to remove one or more of them from the holder.

I claim:

1. A bottle holder and carrier comprising a base plate, a handle member formed with legs which are secured to the base plate so as to hold the the handle member spaced therefrom, a multiplicity of slots extending from the outside toward the center of said plate and adapted to receive the narrow part of bottle necks for suspending the bottles from said slots, a locking bar in the form of a U-piece pivoted at its ends to the legs of the handle, and flange members having detents thereon between the slots for receiving the locking bar and locking it in position to hold the bottle necks from displacement out of the slots.

2. A bottle holder and carrier comprising a relatively flat base member formed with a plurality of peripheral slots, each of which is adapted to receive the narrow portion of a bottle neck, a handle member formed with spaced apart legs which are rigidly attached to said base member in such a manner as to support the handle member in spaced relation to the base member, and a substantially rigid locking bar pivotally mounted at its opposite ends on one of said members for arcuate movement on its pivots and being operative to lock the bottle necks within said slots.

3. A bottle holder and carrier comprising a relatively flat base member formed with a plurality of peripheral slots, each of which is adapted to receive the narrow portion of a bottle neck, a handle member formed with spaced apart legs which are rigidly attached to said base member in such a manner as to support the handle member in spaced relation to the base member, and a substantially rigid U-shaped locking bar pivotally mounted at its opposite ends on one of said members and being operative to enclose the outer extremities of said slots for locking the bottle necks within said slots.

4. A bottle holder and carrier, comprising a relatively flat base member formed with an upwardly turned peripheral flange, said member having a plurality of slots extending inwardly from the peripheral portion, each of said slots being adapted to receive the narrow portion of a bottle neck, a handle member formed with spaced apart legs each of which is joined to the flange of said base member, and a substantially U-shaped locking bar pivotally mounted at its opposite ends on one of said members and adapted for engagement with the flange portion of said base member in such a manner as to secure the bottle necks within said slots.

5. A bottle holder and carried comprising a relatively flat base member formed with a plurality of slots extending inwardly from the peripheral portion of said member, each of said slots being adapted to receive the narrow portion of a bottle neck, a handle member formed with rigid downwardly extending legs each of which is joined to said base member, U-shaped bar pivotally mounted at its opposite ends on one of said members and being operative to engage said base member adjacent the outer extremities of said slots to enclose the bottle necks therein, and detent means carried by said base member for locking said bar in engagement with said base member.

GODFREY L. DREHER.

REFERENCES CITED

The following references are of record in the file of this patent:

UNITED STATES PATENTS

Number	Name	Date
1,005,235	Langguth	Oct. 10, 1911
1,888,324	Matthai	Nov. 22, 1932
2,264,903	Kruea	Dec. 2, 1941
2,409,357	Jackson	Oct. 15, 1946
2,415,598	Mattson	Feb. 11, 1947