July 27, 1948. V. H. LANEY 2,445,834

TAPE PERFORATOR

Filed Oct. 29, 1945 2 Sheets-Sheet 1

FIG. 3

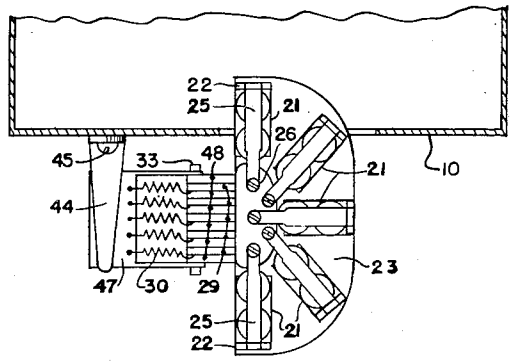

FIG. 4

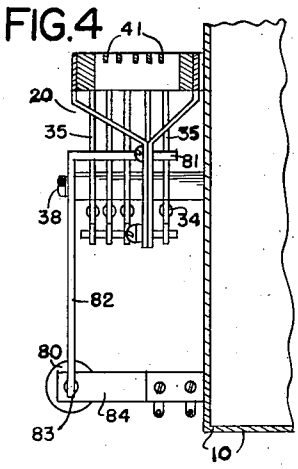

FIG. 1

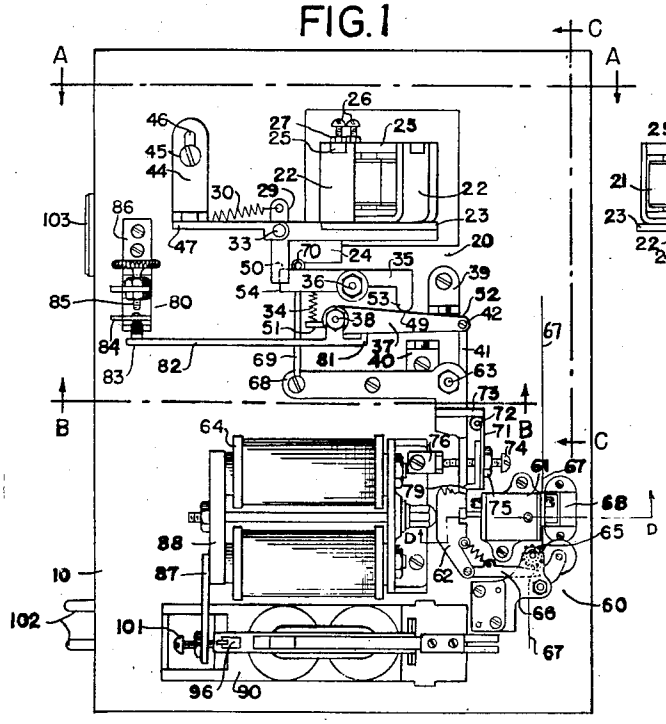

FIG. 5

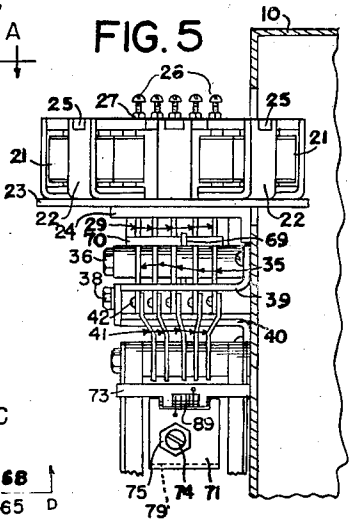

FIG. 2

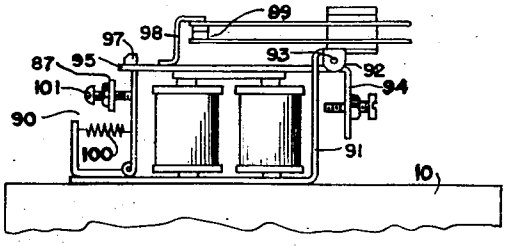

INVENTOR.
VIRGIL H. LANEY

BY Chas. McCandy

ATTORNEY

July 27, 1948. V. H. LANEY 2,445,834

TAPE PERFORATOR

Filed Oct. 29, 1945 2 Sheets-Sheet 2

FIG. 6

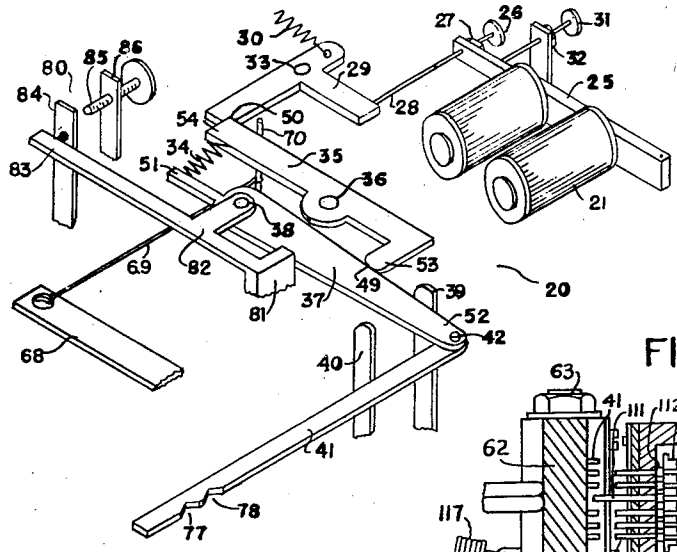


FIG. 8

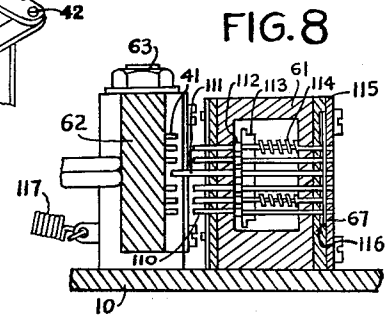


FIG. 7

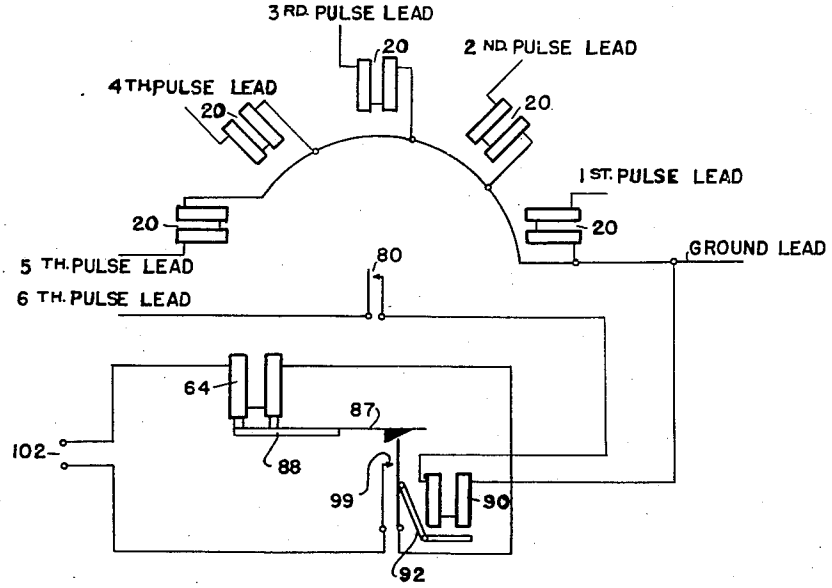


INVENTOR.
VIRGIL H. LANEY

BY Chas. M. Candy

ATTORNEY

Patented July 27, 1948 2,445,834

# UNITED STATES PATENT OFFICE

2,445,834

## TAPE PERFORATOR

Virgil H. Laney, Fremont, Nebr., assignor to Automatic Electric Laboratories, Inc., Chicago, Ill., a corporation of Delaware

Application October 29, 1945, Serial No. 625,115

10 Claims. (Cl. 164—113)

1

This invention relates to a signal controlled mechanism for producing perforated tape such as is used in telegraph systems but which may be employed with equal advantages for other purposes.

One of the objects of the invention is to provide a new and novel tape perforating mechanism which embodies a simple, compact and inexpensive construction.

Another object of the invention is to provide a novel tape perforator which is self-regulating, automatically responsive over a range of variations in the characteristics of the signal impulses, and which always operates at the speed of the incoming signals.

A further object of the invention is to provide an improved magnetically controlled perforator arranged for perforating tape in response to the receipt of incoming code signals, each code signal comprising one or more impulses.

A still further object of the invention is to provide an improved tape perforator capable of being used as a reperforator in a receiving circuit of a telegraph multiplex signal transmission circuit.

A feature of the invention resides in the novel arrangement of the punch pin selecting means. Power invested in a depressed spring is normally prevented from causing the selection of the punch pin by means of a latch which is controlled by an associated incoming-signal electromagnet. Responsive to the receipt of an incoming signal, the electromagnet releases the latch to free the depressed spring, and the spring then automatically causes the related punch pin to be selected.

Another feature of the invention concerns the extreme sensitiveness of the incoming-signal electromagnet. As stated in the preceding paragraph, the incoming-signal electromagnet is required to trip only the latch normally restraining the depressed spring from causing the selection of the punch pin, and, therefore, the electromagnet responds readily to varying incoming signals without the need for normal pulse correction.

A further feature of the invention is the provision of novel resetting means for automatically restoring the punch pin selecting mechanism to normal position when the punch actuating magnet causes the selected punch pin to perforate the tape.

A still further feature of the invention relates to a unique locking arrangement for holding the punch pin selecting element in the operated position during the period that the punch actuating magnet drives the selected punch pin through the tape.

2

Other objects and features will become apparent from the following description together with the accompanying drawings which show a proposed embodiment by way of example.

The invention is disclosed in two sheets of drawings comprising Figs. 1 to 7, inclusive.

Fig. 1 is a view, in elevation, of the perforator showing the general relationship of the selecting mechanism **20**, the perforating mechanism **60**, the "6th pulse" cut-out **80**, and the "6th pulse" relay **90**.

Fig. 2 is an end view, in elevation, of the perforator showing further details of the 6th pulse relay **90**. Other details not directly related to the 6th pulse relay and which would ordinarily appear in this end view have been omitted.

Fig. 3 is a view of the perforator taken along the line A—A in Fig. 1 and showing the radial mounting arrangement of five pairs of incoming-signal electromagnets **21**. Details not pertinent to the radial mounting of the incoming-signal electromagnets **21** have been omitted from this view for the sake of clarity.

Fig. 4 is a partial view taken along the line B—B in Fig. 1 to further illustrate the operating relationship of the 6th pulse cut-out **80** with the selecting mechanism **20**.

Fig. 5 is a view taken along the line C—C in Fig. 1 showing the association of five punch pin selecting elements **41** with the related lever members of selecting mechanism **20**. This view also shows further details of the incoming-signal electromagnets **21**.

Fig. 6 is an isometric view of selecting mechanism **20** for more clearly illustrating the interrelationships of the various parts. In order to simplify this view, only one selecting channel is included.

Fig. 7 is a simple basic circuit diagram for illustrating the local wiring connections of the perforator.

Fig. 8 is a vertical sectional view on an enlarged scale of the punch block, substantially on the line D—D in Fig. 1.

In the form of the invention disclosed in the drawings, the mechanism is controlled by a group of five selecting electromagnets corresponding to the units of the well-known permutation telegraph code. These electromagnets are operated in accordance with received code signals from a receiving distributor (not shown) to cause associated pin selecting elements to select the required punch pins. A local keyboard is usable instead of the alternative arrangement of a keyboard at a distant station. A punch actuating solenoid is

controlled from a local circuit of the receiving distributor to drive the selected punch pins through a tape, to effect the restoration of all operated pin selecting elements, and, through a paper feed medium, to advance the tape into the succeeding perforating position. The controlling circuit of the punch actuating solenoid is closed at the receiving distributor once for each complete cycle of the distributor regardlessly of whether signals are being received, and, to avoid needless advancing of blank tape through the perforator, a signal-controlled contact known as the 6th pulse cut-out is included in the control circuit of the punch actuating solenoid at the perforator. This 6th pulse cut-out is operated in common by the pin selecting elements of the five signal channels, and serves to complete the controlling circuit of the punch actuating solenoid at the perforator only when any one of the punch pin selecting elements becomes effective in response to the operation of the associated selecting electromagnet.

Referring now to Figs. 1 to 7, inclusive, the several parts of the perforator are mounted upon a hollow base 10 which is of square or rectangular configuration. The base being of hollow construction permits the concealment of the local wiring between the various parts inside the base, and also permits the mounting of minor parts or parts requiring only infrequent inspection inside the base.

Five pairs of selecting electromagnets 21 are mounted on individual L-shaped brackets 22, these bracket assemblies in turn mounted on a common plate 23 in substantial radial relationship. The assembly of electromagnets is located near one end of base 10 as shown in Fig. 1, and rigidly supported partly above and below the top surface of base 10 by means of bracket 24 as shown in Fig. 5. Each of the electromagnets is provided with an iron core projecting from one end of the coil for magnetic cooperation with armature bar 25. Each armature bar 25 is pivotally supported in a well-known conventional manner at the outer end of its respective L bracket 22.

At the outer end of each armature bar 25 is located a threaded striker pin 26 (Fig. 6) which is locked in the set position on armature bar 25 by means of lock nut 27. Striker pin 26 is in mechanical contact with plunger pin 28 which is bearinged in plate 23 (bearing not shown) for the purpose of tripping latch 29 when the operation of armature bar 25 causes striker pin 26 to operate plunger pin 28. A spring 30 attached to latch 29 causes plunger pin 28 through its mechanical contact with striker pin 26 to return armature bar 25 to normal position when latch 29 is restored to the initial position. Latch 29 is pivoted at 33. An adjustable backstop screw 31 locked in the set position by means of lock nut 32 limits the non-operated normal position of armature bar 25.

There are five latches 29 pivotally spaced in a framework 48 which is part of common plate 23 supporting the five pairs of electromagnets 21 (Fig. 3). Pivot pin 33 passes through the six finger members of frame 47 and through aligned bearing holes in the five latches 29, thus permitting latches 29 to be rocked in a reciprocating motion about pin 33. Springs 30 (one for each latch 29) are anchored to a frame 47 which is pivotally attached to framework 48 by means of pivot pin 33 (Fig. 3). The outer end of frame 47 rests against stop bracket 44 which is fastened to base 10 by means of screw 45 (Figs. 1 and 3). A slot 46 in stop bracket 44 provides means for adjusting the tension in springs 30 by changing the position of frame 47 with respect to framework 48. Shifting bracket 44 in one direction changes the relationship of frame 47 with framework 48, thus causing an increase in the tension of springs 30, and shifting bracket 44 in the opposite direction causes a corresponding reduction in the tension of springs 30.



Each punch pin selecting element 41 is pivotally attached to a related operating lever 37 of selecting mechanism 20 by means of pivot pin 42. Lever 37 is pivoted by means of pivot stud 38 rigidly fastened to base 10 to permit a reciprocating movement of lever 37 between stop brackets 39 and 40 fixedly attached to base 10 (Figs. 1 and 5). Pivot stud 38 is so located in lever 37 as to produce a short end 51 and a long end 52 in lever 37. A transfer lever 35 is pivoted to base 10 by means of pivot stud 36 (Figs. 1 and 6), and the angled end 53 of transfer lever 35 may make contact with an edge of the long end 52 of lever 37 at point 49.

A power spring 34 is anchored between the short end 51 of lever 37 and the straight end 54 of transfer lever 35, tending to force the short end 51 of lever 37 and the straight end 54 of transfer lever 35 apart and thus cause the angled end 53 of transfer lever 35 to make contact with lever 37 at point 49. In the normal position of selecting mechanism 20, however, the straight end 54 of transfer lever 35 is held from movement outwardly by means of a notch 50 in one member of latch 29. The pressure of spring 34 is, therefore, directed entirely against the short end 51 of lever 37, thus forcing and holding the long end 52 of lever 37 against stop bracket 39 (Fig. 6). In this position of lever 37, the associated punch pin selecting element 41 is made ineffective.

Now, when an incoming signal impulse is received and causes electromagnet 21 to attract armature bar 25, striker pin 26 causes plunger pin 28 to trip latch 29 (Fig. 6). The tripping of latch 29 removes notched end 50 of latch 29 from in contact with long end 54 of transfer lever 35, and the power in spring 34 is now directed against long end 54 of transfer lever 35. The leverage relationships between lever 37 and transfer lever 35 are such that spring 34 now causes transfer lever 35 to be operated, and the angled end 53 of transfer lever 35 contacts the long end 52 of lever 37 at point 49. Transfer lever 35, therefore, forces and holds the long end 52 of lever 37 against stop bracket 40. In this latter position of lever 37, the associated punch pin selecting element 41 is made effective.

The operation of transfer lever 35 just described is a local action effectively and almost instantly accomplished without reference to the characteristics of the incoming-signal impulse except as to a minimum strength characteristic, since the operation of electromagnet 21 is required to trip only latch 29, and spring 34 alone accomplishes the operation of transfer lever 35. Only a small amount of power and only a short movement of plunger pin 28 is required to trip latch 29, and, hence, the tripping of latch 29 is accomplished over a wide range of speed and power in the incoming signal impulse. It is obvious that the electromagnet 21 of one or more signal channels may be operated in the well-known permutation telegraph manner, with a corresponding operation of the related transfer

levers 35 and associated selection of punch pins in the perforating mechanism 60.

The tripping of any latch 29 responsive to the receipt of an incoming signal impulse over the related signal channel, as previously described, causes the closing of the 6th pulse cut-out 80 in the following manner. When latch 29 is tripped, spring 34 causes transfer lever 35 to force and hold long end 52 of lever 37 against stop bracket 40. As the long end 52 of lever 37 moves towards stop bracket 40, it moves an extension 81 of lever 82 (Fig. 6) outwardly. Lever 82 is pivoted at 38 and, responsive to the urging of extension 81 by lever 37, the long end 83 of lever 82 forces contact spring 84 into electrical contact with contact screw 85, thereby completing the control circuit of the punch actuating solenoid at the perforator. Extension 81 is of sufficient length to bridge all five levers 37 in order that it may be operated by any one of the levers 37 (Fig. 4). Contact spring 84 is so tensioned that it normally forces and holds extension 81 against the edges of levers 37 through the medium of lever 82. Contact screw 85 is adjustably mounted on bracket 86 which is rigidly fastened to base 10, bracket 86 providing a firm and immovable support for contact screw 85 (Fig. 1).

The perforating mechanism 60 shown in Fig. 1 is of a well-known type comprising in general a punch pin block 61 having six punch pins (one of which is a tape feed pin), a punch hammer 62 pivoted at 63 for operating the punch pins, five punch pin selecting elements 41 adapted to be shifted in front of the punch pins through the operation of selecting mechanism 20 previously described for determining the operation of the punch pins, a punch actuating solenoid 64 for operating punch hammer 62, and a tape feed roller 65 actuated by punch hammer 62 through a pawl 66. The tape 67 extends from a suitable reel mounted on base 10 (reel not shown) through a suitable tensioning means (not shown), through the guide opening between pin block 61 and shield 68, and thence over a portion of the periphery of feed roller 65. This type of perforating mechanism is described in detail in Patent No. 1,851,838, R. Hoover et al., dated March 29, 1932, to which patent reference may be made for details not included in this specification. A bracket 87 (Fig. 1) is attached to cross-bar 88 of punch actuating magnet 64 for the purpose of releasing latch 97 of 6th pulse relay 90 in the manner to be described later. The punch block 61 illustrated in Fig. 8 comprises five punches 110 employed to punch the code holes in the tape, and a sixth punch 111 designed to punch feed holes in the tape. Punch 111 is of smaller diameter than punches 110. Each punch has an annular enlargement, or collar, 112 normally resting against the wall adjacent to punch hammer 62. The punches extend through a retracting plate 113 and through openings in the opposite wall of block 61. The punches are retained in the normal position, as shown in Fig. 8, by compression springs 114 surrounding two of the pins. A die plate 115 is secured to punch block 61 and is provided with openings in alignment with the punch pins. A guide opening 116 is provided in punch block 61 for the passage of tape 67 between die plate 115 and the ends of punches 110 and 111. Since feed holes are required for every character, punch 111 is longer than punches 110 so that it will always be operated by punch hammer 62. Punches 110 cannot be forced through the tape by punch hammer 62 unless the ends of the corresponding punch pin selecting elements 41 are interposed between punch hammer 62 and the tips of punches 110. A spring 117 attached to punch hammer 62 and secured to the base of the perforator (base attachment not shown) provides means for restoring punch hammer 62 to normal position after a punching has been effected.

The automatic restoring of all operated punch pin selecting elements to the normal position when punch actuating solenoid 64 causes punch hammer 62 to drive the related selected punch pins through the tape, is accomplished in the following manner. An angle extension 68 of punch hammer 62 controls the restoring of all operated punch pin selecting elements through the medium of a resetting lever 69 common to the five transfer levers 35 (Figs. 1 and 6). One end of resetting lever 69 is pivotally attached to extension 68, and the other end of lever 69 passes between the third and fourth transfer levers 35 as shown in Figs. 1 and 5. A T member 70 is attached to lever 69 just beyond the far edges of transfer levers 35 and so bridges all five transfer levers 35 that when the operation of punch hammer 62 causes extension 68 to pull resetting lever 69 towards punch actuating solenoid 64, T member 70 forces the straight ends 54 of all operated transfer levers 35 in the direction of punch actuating solenoid 64 against the pressures of the related springs 34 (Fig. 6). The angled ends 53 of said transfer levers 35 are, therefore, pulled away from contact with their respective levers 37 at points 49, and now the pressure of each related spring 34 is directed to urging and subsequently holding the long end 52 of the respective lever 37 against stop bracket 39. The long end 52 of each said lever 37 draws its punch pin selecting element 41 from in front of the associated punch pin. The operation of resetting lever 69 does not effect any transfer lever 35 already in the normal position because the straight end 54 of such a transfer lever is out of the operating plane of T member 70. When the straight end 54 of any operated transfer lever 35 is pulled in the direction of solenoid 64 by T member 70 of resetting lever 69, spring 30 of the respective latch 29 tends to pull notched end 50 of latch 29 towards end 54 of the transfer lever, and, as resetting lever 69 completes its stroke, the notched end 50 of latch 29 slips in behind end 54 of the transfer lever thus retaining transfer lever 35 in the reset, or normal, position.

After a punch pin selecting element 41 has been operated to cause the conditioning of the related punch pin preparatory to a punching operation, it is desirable to prevent any further longitudinal movement of element 41 until the punching of the tape has been accomplished. The reason for this is that as much hammer 62 moves towards punch pin block 61 it gradually draws resetting lever 69 in the direction of solenoid 64 through the medium of extension 68, and, hence, the gradually increasing tension of spring 34 operating against short end 51 of lever 37 attempts to urge long end 52 of lever 37 towards stop bracket 39. If lever 37 is permitted to move before punch hammer 62 completes the punching, the tip of selecting element 41 may be prematurely withdrawn from in front of the related punch pin and thus a false punching would occur. It is also desirable to prevent longitudinal movement of an unoperated selecting element 41 during the punching of the tape to prevent an accidental selection of a punch pin due to jars, vibrations

and the like. To overcome these possible faults, a novel locking arrangement, as described in the following paragraphs, is provided for holding the punch pin selecting elements 41 longitudinally immovable during the period that punch hammer 62 drives the selected punch pins through the tape.

The locking arrangement for retaining the punch pin selecting elements 41 in their respective longitudinal positions while the tape is being punched consists essentially of a pawl 79 (Fig. 1) common to the five selecting elements 41 momentarily engaging either tooth 77 or tooth 78 (Fig. 6) in each selecting element 41. The common pawl 79 is part of a gate 71 which is hingedly attached to punch hammer 62 by means of pin 72 and bracket 73. A spring 89 (Fig. 5) spirally wound around pin 72 and attached to gate 71 and bracket 73 normally urges gate 71 towards punch hammer 62. A threaded stud 74 adjustably attached to gate 71 by means of lock nut 75 projects through gate 71 and between the second and third selecting elements 41 for engaging stop bracket 76 fixedly attached to the mounting bracket of solenoid 64. Part of the top member of punch hammer 62 is cut away in Fig. 1 to more clearly reveal stud 74, stop bracket 76 and pawl 79. Stud 74 is so adjusted with respect to gate 71 and stop bracket 76 that when punch hammer 62 is in the normal, or unoperated, position bracket 76 causes stud 74 to move gate 71 sufficiently away from punch hammer 62 to clear pawl 79 from teeth 77 and 78 of the punch pin selecting elements. Hence, the selecting elements 41 are free to be moved longitudinally and, therefore, one or more elements 41 may be operated by selecting mechanism 20 to condition punch pins for a subsequent tape perforating operation.

Assuming now that a punch pin selection has been made through the medium of the selecting elements 41, the punch actuating solenoid 64 is then energized to cause punch hammer 62 to drive the selected punch pins through the tape. As punch hammer 62 starts to operate, spring 89 (Fig. 5) of hinge pin 72 causes stud 74 to temporarily maintain contact with stop bracket 76 by forcing gate 71 towards punch hammer 62. As gate 71 is urged towards punch hammer 62, pawl 79 enters an aligned row of teeth which may include teeth 78 of all selecting elements 41 or part 77 teeth and part 78 teeth dependent upon how many of the punch selecting elements 41 were operated. In the normal position of elements 41, teeth 77 are aligned in one row and teeth 78 in another row, and pawl 79 is in line with the 77 row, but when an element 41 is in the operated position its tooth 78 is aligned with the teeth 77 of all unoperated elements 41. Further movement of punch hammer 62 causes stud 74 to leave bracket 76, and pawl 79 then rests firmly in an aligned row of teeth of the elements 41, thus locking all elements 41 against longitudinal movement.

When punch hammer 62 has driven the selected punch pins through the tape, it starts its return movement to the normal position. Now, as punch hammer 62 approaches the normal position, stud 74 again contacts stop bracket 76, and further return movement of punch hammer 62 causes bracket 76 to prevent further advance of stud 74. Hence, gate 71 will be urged away from punch hammer 62 until pawl 79 is withdrawn from the aligned row of teeth in the selecting elements 41. Elements 41 then in the operated position are now free to be moved longitudinally and, consequently, such elements 41 are automatically restored to the normal position through the medium of spring 34 forcing and holding the long end 52 of lever 37 against stop bracket 39 as previously explained.

The circuit for punch actuating solenoid 64 is closed by a contact of the 6th pulse relay 90, which relay is operated by an incoming signal through the 6th pulse cut-out 80 after each selection of punch pins. The details of 6th pulse relay 90 are shown in Fig. 2 wherein 91 represents a heel piece on which armature 92 is pivotally supported at 93. Armature 92 is L-shaped, with member 94 fitted with an adjustable set screw and the long member 95 fitted with a slot 96 (Fig. 1) for engaging latch 97. Contact 99 controls the local supply circuit to the windings of punch actuating solenoid 64 and is operated by means of bracket 98 attached to armature 92. It should be understood at this time that the particular form of 6th pulse relay 90 and its contact arrangement is conventional only as any well-known form of high-voltage, quick contact-break relay may be used. The energization of 6th pulse relay 90 causes armature 92 to be attracted, thereby causing contact springs 99 to close and complete the local supply circuit to solenoid 64. As armature 92 closes contact 99, the slot 96 in the 95 end of armature 92 engages latch 97 thus locking armature 92 in the operated position and retaining contact 99 closed. Solenoid 64 operates in response to the closing of contact 99 and causes punch hammer 62 to drive the selected punch pins through the tape, as previously explained. Just as solenoid 64 completes its stroke, bracket 87 attached to cross-bar 88 trips latch 97, thereby causing the release of armature 92 of the 6th pulse relay and the consequent opening of contact 99. The circuit to solenoid 64 is now opened at contact 99, and solenoid 64 restores to normal position. Latch 97 is of sufficient length to be retained in slot 96 when armature 92 restores, and the tip of latch 97 prevents the locking of armature 92 in the normal position. A spring 100 provides the necessary tension for latch 97, and a set screw 101 rigidly supported on bracket 87 provides means for adjusting the latch.

Fig. 7 shows in simple diagrammatic form typical internal wiring of the perforator. Leads from punch actuating solenoid 64 and from contact 99 of 6th pulse relay 90 are wired to pin plugs 102 mounted in a side rail of base 10 (Fig. 1) for connecting a power supply source to solenoid 64. The six signal leads designated 1st pulse lead to 6th pulse lead, inclusive, in Fig. 7 and the common ground lead are wired to a multiple-pin socket 103 also mounted in a side rail of base 10. Pin plugs 102 and multiple-pin socket 103 provide means for conveniently and quickly connecting the perforator into an operating circuit by attachment of suitable socket and plug complements.

It should be understood that while one embodiment of the invention is disclosed and described in the preceding specification, the invention is not limited to the particular form or application shown, but is entitled to the equivalents thereof within the scope of the appended claims.

What is claimed is:

1. In a signal controlled perforator, a perforating mechanism, an element for conditioning said mechanism, a slot in said element, a pawl for engaging said slot, a power spring, means for tensioning said spring, a latch responsive to

said tensioning of said spring for locking said tensioned spring, means responsive to a received signal for releasing said latch to unlock said tensioned spring, said conditioning element actuated in response to the unlocking of said tensioned spring thereby to condition said mechanism, means for causing said pawl to engage said slot thereby to lock said conditioning element in said actuated position, and means for operating said conditioned mechanism.

2. In a signal controlled perforating device, a tape, a set of punches, operating bars each having a slot, a pawl common to said bars for engaging said slots in said bars, control elements associated with said bars, power springs associated with said control elements, means for tensioning said springs and for locking said springs under tension, means for releasing said tensioned springs in accordance with a received code combination of electrical impulses to cause the moving of said bars into operating position with said punches, means for causing said pawl to engage said slots in said moved bars thereby to lock said bars in said moved positions, and means for pressing said moved bars into engagement with said punches to cause said punches to perforate said tape.

3. In a tape perforating device, punches, bars each having two slots, a pawl common to said bars for engaging said slots in said bars, means responsive to an incoming signal for operating one of said bars to condition one of said punches, means for causing said pawl to engage one of said slots in said one operated bar and said other slots in said unoperated bars for locking all said bars in their respective positions, and means for causing said conditioned punch to perforate the tape.

4. In a tape perforating mechanism, punches, punch conditioning bars, two slots in each of said bars, a pawl for occupying one or the other of said slots in said bars, means for operating one of said bars to condition one of said punches, means for causing said pawl to occupy one of said slots in said operated bar and said other slots in said other bars for locking all said bars in their related positions, means for causing said conditioned punch to perforate the tape, and means for thereafter withdrawing said pawl from said occupied slots in said bars.

5. In a tape perforator, punches, punch conditioning members, an operating mechanism for each of said members, a tensioned spring individual to each of said mechanisms, latches individual to said tensioned springs retaining the springs in the tensioned positions, a magnet, an actuator, signal responsive means for causing an operation of one or more of said latches to release the related tensioned spring or springs, said releasing of a tensioned spring or springs causing said released tensioned spring or springs to actuate the associated mechanism or mechanisms for operating the related punch conditioning member or members thereby to condition said related punch or punches, and means for causing said magnet to operate said actuator thereby to cause the operation of said conditioned punch or punches and also to cause the retensioning of said released spring or springs.

6. In an electrically operated tape perforator, punches, mechanisms for conditioning said punches, tensioned springs locked in the tensioned positions, a magnet, an actuator, means for unlocking said tensioned springs to cause said mechanisms to operate thereby to condition said



punches, means for causing said magnet to operate said actuator, said operation of said actuator causing the simultaneous operation of said conditioned punches thereby to perforate a tape, said operation of said actuator also causing said unlocked springs to be retensioned thereby to restore said operated mechanisms.

7. In a perforator, a tape, a punch, a bar, a rotatably pivoted element connected to said bar, an electrical contact, a member for operating said contact, a lever, a tensioned spring, a magnet, an actuator, means for causing said tensioned spring to move said lever to cause an operation of said element, said operation of said element moving said bar into operating position with said punch and also causing said member to operate said contact, means including said operated contact for causing said magnet to operate said actuator there to cause said moved bar to urge said punch to perforate said tape, said operation of said actuator also causing another movement of said lever thereby to cause said spring to be retensioned.

8. In a perforating mechanism, a punch, a bar, a rotatably pivoted element connected to said bar, a lever, a tensioned spring, a magnet, an actuator, means for causing said tensioned spring to move said lever thereby to cause said element to operate said bar to condition said punch, means for causing said magnet to operate said actuator thereby to cause a movement of said conditioned punch and another movement of said lever, said other movement of said lever causing the retensioning of said spring, and means for restoring said actuator.

9. In a signal controlled perforator, punches, mechanisms for conditioning said punches, individual springs for operating said mechanisms, an electromagnet, an actuator, means responsive to a received signal for causing said electromagnet to operate said actuator thereby to cause the tensioning of said springs, means for locking said tensioned springs, means for restoring said actuator, other electromagnets responsive to other received signals for releasing said tensioned springs to cause the operation of said mechanisms thereby to condition said punches, means responsive to another received signal for causing said first electromagnet to again operate said actuator thereby to cause an operation of said conditioned punches and to also cause the retensioning of said released springs, said retensioning of said released springs causing said operated mechanisms to be restored.

10. In a signal controlled perforating mechanism, punches, members each having a slot, a pawl common to said members for engaging said slots, means responsive to incoming signals for operating said members to condition said punches, means for causing said pawl to engage said slots in said operated members for locking said members in said operated positions, and means for operating said conditioned punches.

VIRGIL H. LANEY.

## REFERENCES CITED

The following references are of record in the file of this patent:

UNITED STATES PATENTS


| Number | Name | Date |
|---|---|---|
| 2,252,852 | Hoover | Aug. 19, 1941 |
| 2,308,543 | Reiber | Jan. 19, 1943 |
| 2,346,267 | Mills | Apr. 11, 1944 |
| 2,348,214 | Gubisch | May 9, 1944 |
| 2,398,014 | Lake | Apr. 9, 1946 |