July 27, 1943. B. NELSON 2,325,268

CURTAIN STRETCHER

Filed Jan. 1, 1942 2 Sheets-Sheet 1

Fig. 1.

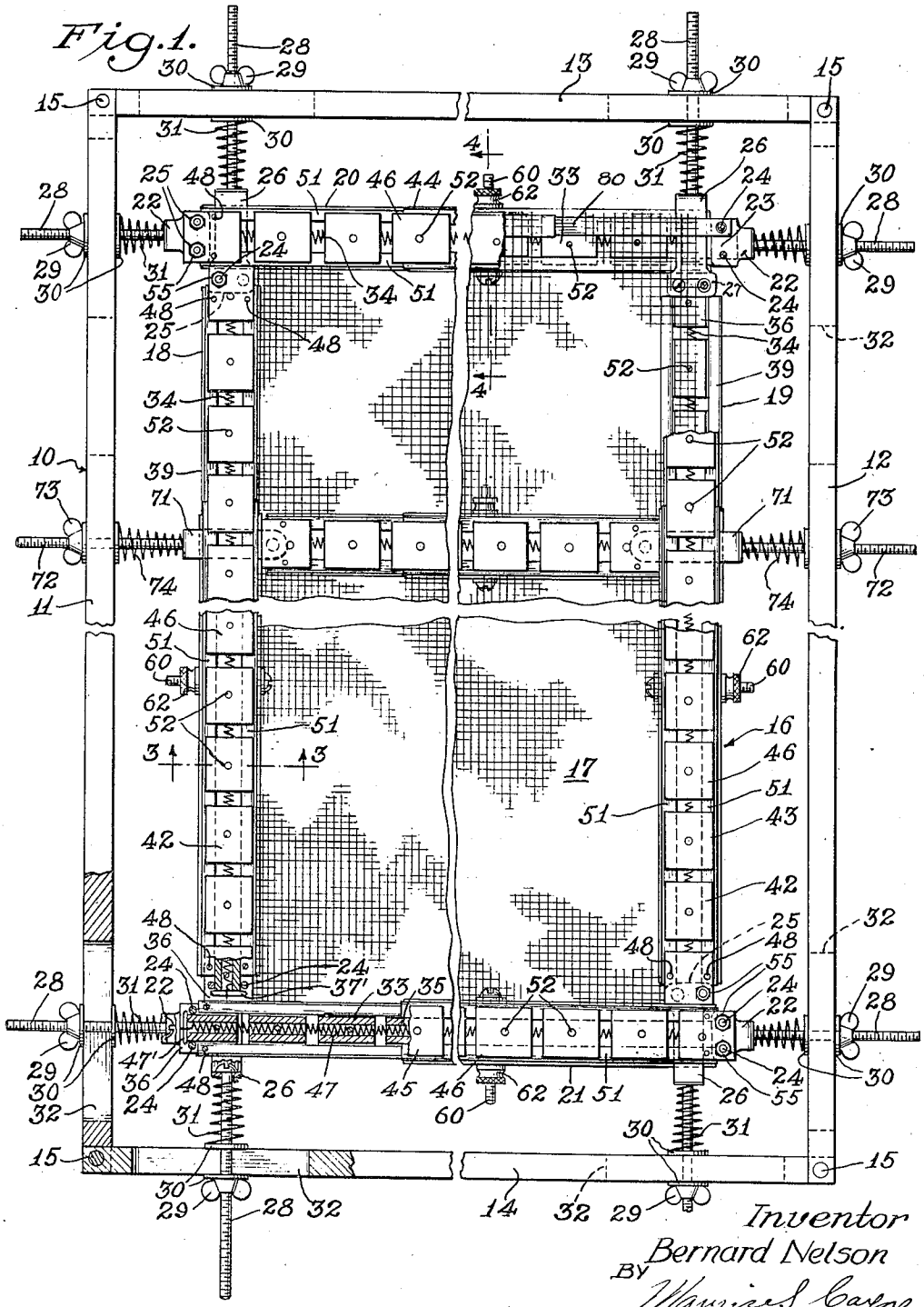

Inventor
Bernard Nelson
By Maurice S. Cayre
Attorney.

July 27, 1943. B. NELSON 2,325,268

CURTAIN STRETCHER

Filed Jan. 1, 1942 2 Sheets-Sheet 2

Fig. 2.

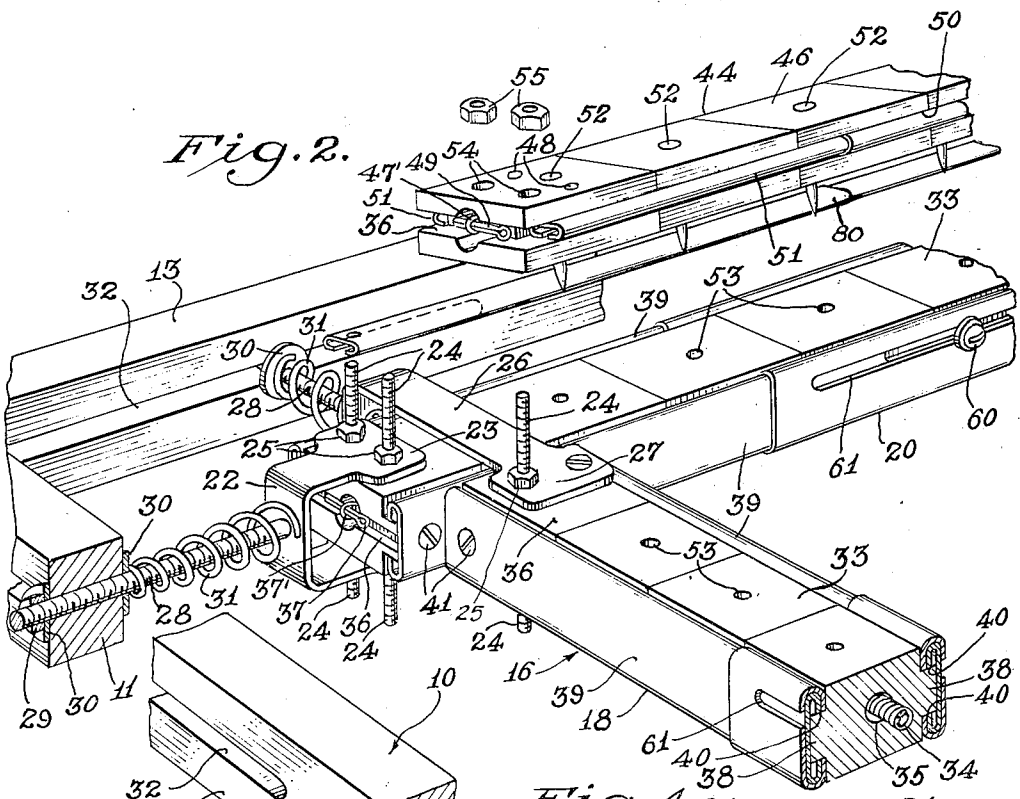

Fig. 3.

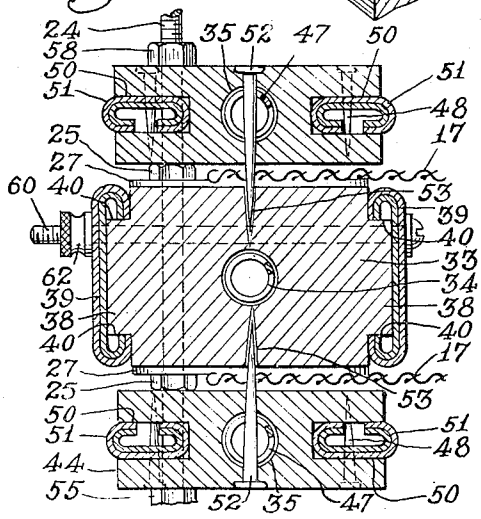

Fig. 4.

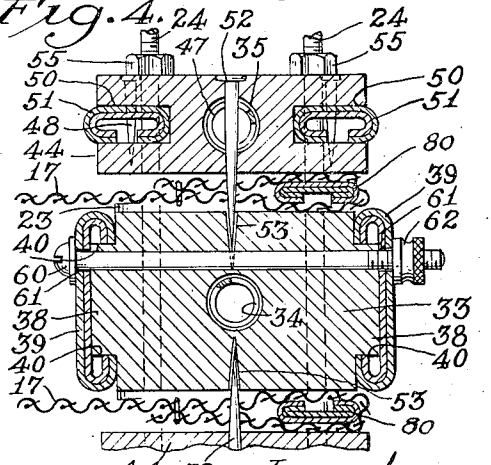

Inventor
Bernard Nelson
By Maurice L. Cayne
Attorney.

Patented July 27, 1943

2,325,268

UNITED STATES PATENT OFFICE

2,325,268

CURTAIN STRETCHER

Bernard Nelson, Chicago, Ill.

Application January 1, 1942, Serial No. 425,258

12 Claims. (Cl. 45—24)

This invention relates to curtain stretchers, and more particularly to such devices which are capable of being readily used in the home.

An object of the invention is to provide a novel and improved curtain stretcher whereby the curtain may be readily placed upon the device and securely fixed prior to stretching same.

A further object of the invention is to provide a novel and improved curtain stretcher which will permit a uniform stretching of the curtain in all directions.

A still further object of the invention is to provide a novel and improved curtain stretcher which will not injure the curtain while stretching same.

A still further object of the invention is to provide a novel and improved construction for a curtain stretcher.

A further object of the invention is to provide a curtain stretching device comprising an outer rigid frame and an inner frame, said inner frame being expansible in order to permit the ready stretching of curtains mounted thereon.

A further object of this invention is to provide a curtain stretching device comprising an outer rigid frame and an inner frame, said inner frame being expansible in order to permit the ready stretching of curtains mounted thereon and being formed of block members mounted upon a contractile member and adapted to be equidistantly spaced therealong when said frame is expanded.

A further object of the invention is to provide a curtain stretching device comprising inner and outer frames, the outer frame being rigid and fixed in size, the inner frame being adjustable as to dimensions in order to accommodate curtains of varying sizes, and being expansible in order to stretch said curtains after same have been mounted thereon.

A further object of the invention lies in the provision of curtain stretching elements, each of which is formed of a series of blocks held together by a contractile member and being connected in such a manner that when stretched the blocks are equidistantly spaced.

Other objects and features of the invention lie in the provision of various constructional details whereby the stretcher is made to operate positively and efficiently, whereby the stretcher is simple in construction, whereby the stretcher may accommodate practically any size curtain, and whereby the stretcher may accommodate a plurality of curtains at the same time.

With the foregoing and other objects in view which will appear as the description proceeds, the invention consists of certain novel features of construction, arrangement and combination of parts hereinafter fully described, illustrated in the accompanying drawings, and particularly pointed out in the appended claims, it being understood that various changes in the form, proportion, size and minor details of the structure may be made without departing from the spirit or sacrificing any of the advantages of the invention.

For the purpose of facilitating an understanding of my invention, I have illustrated in the accompanying drawings a preferred embodiment thereof, from an inspection of which, when considered in connection with the following description, my invention, its mode of construction, assembly and operation, and many of its advantages should be readily understood and appreciated.

Referring to the drawings in which the same characters of reference are employed to indicate corresponding or similar parts throughout the several figures of the drawings:

Fig. 1 is a plan view of my curtain stretcher in operative position, with various portions thereof shown in section.

Fig. 2 is a perspective view of a fragment of the curtain stretcher, showing details in section.

Fig. 3 is a sectional view of a portion of the device taken along the line 3—3 of Fig. 1.

Fig. 4 is a sectional view of a portion of the device taken along line 4—4 of Fig. 1.

Referring to the details of my invention, the reference character 10 designates generally a frame of wood, metal, or the like, and comprises two side members 11 and 12, and end members 13 and 14. The frame 10 is rigid when in operative condition and is fixed by means of brackets (not shown) reenforcing the corners, or the like. The drawings show the use of pins 15 with mortis and tenon joints. If desired, the said frame 10 may be made so as to be folded or collapsed when not in use so as to occupy a minimum amount of storage space.

Positioned within the frame 10, as shown in Fig. 1, is a secondary frame 16, upon which the curtain 17 is adapted to be arranged. Said frame 16 comprises side members generally designated as 18 and 19, and end members 20 and 21. Each of said frame members is provided at the opposite ends thereof with substantially U-shaped yokes by means of which they are attached to and carried by the frame 10. The end members 20 and 21 have relatively short U-shaped yokes 22 which

have portions 23 overlying the extremities of said end members 20 and 21 and fixed thereto by studs 24 and nuts 25. The studs are relatively long and protrude a substantial distance above and below the surfaces of the end frame members 20 and 21 for a purpose to be presently more fully described.

Each of the side members 18 and 19 is provided, upon its extremities, with U-shaped yokes 26 which are somewhat longer than the members 22. The reason for the members 26 being relatively long is to permit the end members 20 or 21 to pass between the arms thereof in the assembly of the device, as shown in the drawings. Each of the members 26 is provided with a portion 27 corresponding to the portion 23 of each member 22, by means of which it is affixed to the extremities of the members 18 and 19 by studs 24 and nuts 25.

Each of the U-shaped members 22 and 26 is provided with a bolt 28 rigidly secured to and extending from its rear face. The free end of the bolt is adapted to pass through an elongated slot 32 provided in the end and side members of the frame 10, as shown in Fig. 2. A wing nut 29 is threaded on the free ends of each of said bolts. Appropriate washers 30 are provided as bearing surfaces for the wing nuts and for coiled springs 31 with which each bolt 28 is provided. Said spring 31 is positioned between the inner face of the respective side or end member of the frame 10 and the base of each of the U-shaped members 22 or 26 with which said spring 31 may be associated.

It will be seen from the above description that the bolt and spring arrangement serves to maintain the inner frame 16 suspended within the outer frame 10 and also provides take-up devices whereby when the wing nuts 29 are tightened, the respective members 18, 19, 20 or 21 are elongated against the force exerted by springs 31. It is also obvious that the suspension is resilient in that the springs 31 absorb shocks. Further, when the wing nuts are loosened, the expansive force of the springs 31 aids in the contracting of the respective members 18, 19, 20 and 21, as the case may be.

As already stated, each of the bolts 28 extends through an appropriate slot 32 formed in the respective members 11, 12, 13 and 14, in order to permit the inner frame 16 to be adjusted in size to perform the stretching operation. In adjusting same, the frame members 20 and 21 are adapted to be moved longitudinally as viewed in Fig. 1, while the frame members 18 and 19 are adapted to be moved transversely as viewed in Fig. 1. Obviously the slots 32 should be of such length to permit a reasonable amount of such adjustment. The manner in which the size of the rectangle defined by the frame members 18, 19, 20 and 21 may be varied is thus seen.

The frame members 18, 19, 20 and 21, which go to make up the curtain receiving frame 16, are substantially identical in construction and the description of one of these frame members, therefore, will apply to all of them. The members are constructed so that when in assembled position, it will be rigid against lateral bending but will readily lend itself for extension longitudinally. The frame member, in assembled condition, consists of a plurality or series of blocks of wood, or the like, 33, each of said blocks being provided with a central opening 35 extending completely therethrough and through which is threaded a coiled spring 34. The free ends of said coiled spring are secured in the free ends of the endmost blocks of the frame member by having a groove 36 provided in the end face of said blocks within which is received a cotter pin 37, said cotter pin passing through the free end or ring end 37' of the coiled spring 34 (see Fig. 2). In this manner the blocks 33 are assembled and are held in such assembled position by means of the coiled spring 34.

To further secure the blocks to each other, each of said blocks is provided on the side face thereof with a tongue or projection 38, which tongues or projections are adapted to be received in extensible telescoping hollow sheet metal members 39, provided one on each side of the frame member and having a recess 40 throughout its entire length, adapted for receiving said projections or tongues 38. The said sheet metal members 39 are secured adjacent their free ends to the endmost blocks by means of screws 41 or some other suitable fastening means. These sheet metal members may also be secured intermediate their ends to one of the intermediate blocks of the frame member by means of a bolt 60 extending through elongated slots 61 provided in said sheet metal members and having a nut 62 threaded on the free end thereof, said bolt and nut 60 and 62 preventing the sheet metal members 39 from becoming detached or disassembled from its associated block members 33. The bolt 60 and nut 62, however, are adjusted so that they will permit movement of the telescoping portions of the sheet metal member 39 to permit extension of the said frame members.

As shown in Fig. 2, the top and bottom surfaces of each of the blocks 33 are provided with centrally positioned openings 53 for the accommodation of curtain-holding pins which will be presently described. The construction of the members 18, 19, 20 and 21 which go to make up the inner frame 16 are thus shown to be rigid in lateral construction and yet readily extensible in order that the size of the frame defined therebetween may be varied as desired.

Adapted for cooperation with the members 18, 19, 20 and 21, are a plurality of members 42, 43, 44 and 45, adapted to overlie the members of the frame 16. These overlying members 42, 43, 44 and 45 may be of substantially the same construction as the members 18, 19, 20 and 21. As shown in Fig. 2 each of said overlying members comprises a series of blocks 46 threaded upon a coiled spring 47, the free ends of said coiled spring being secured in place to the end surface of the end blocks by means of a cotter pin 49 disposed in a suitable groove provided therefor and extending through the free or ring end 47' of the coiled spring. Each of the blocks 46 is provided on its side surface with a groove 50, said grooves, when the blocks are in aligned position, will provide an elongated groove extending through the entire length of the assembled member. Within these grooves is disposed an extensible sheet metal telescoping member 51, the ends of each of said members 51 being secured to the end blocks by means of pins or other suitable fastening means, as shown at 48. Thus, in assembled position, the said members 42, 43, 44 and 45 are laterally substantially rigid, but are readily extensible in a longitudinal direction. Each of said overlying members is adapted to overlie and cooperate with one of the frame members 18, 19, 20 or 21, in a manner to be now described.

In the operation of the device, the curtain 17, to be stretched, is placed upon the frame 16 in

an unstretched condition. The overlying members 42, 43, 44 and 45 are then placed in position upon their respective cooperating members 18, 19, 20 and 21. Each of these overlying members is provided with a pin 52 which passes completely through each of the blocks forming said members. Said pin 52 is adapted to pass through the coiled spring 47 and extends a short distance beyond the opposite face of the block, as shown more clearly in Fig. 2 of the drawings. The free end of the pin 52 is adapted to be received in the openings 53 provided in the upper face of each of the blocks 33 with the curtain 17 being secured in place by said pins. The overlying members 42, 43, 44 and 45 are adapted to be secured upon the frame 16 so that each of said members will move as a unit with its corresponding and cooperating frame member of the frame 16. In the embodiment illustrated, the free ends of the studs 24 which secure the yokes 22 and 26 may be utilized for securing the members 42, 43, 44 and 45 to their cooperating members of the frame 16. Suitable nuts 55 and openings 54 may be utilized for securely fastening said members in place.

In this assembled position, the wing nuts 29 may be tightened upon the respective bolts 28 to thereby cause an extension of the frame 16 in all of its four directions with the result that the curtain 17, disposed upon said frame, will be stretched to the desired size, in which position it may be left to dry. First, the nuts 29 on the bolts 28 associated with the end members 20, 21 are tightened with the nuts on the bolts connected with the side members 18, 19 being loosened so that the latter bolts may easily be displaced in the slots 32. Thereby the curtain 17 becomes stretched in the transverse direction corresponding to the lengthening of the end members 20, 21, and carries with it the side frame members 18, 19 which, as just stated, are loose with respect to the outer frame 10 at that time. By tightening now the nuts 29 on the bolts associated with the side members 18, 19, the latter become fixed in the desired distance from each other and lengthened, stretching thereby the curtain in its lengthwise direction.

It may be noted at this time that a plurality of members, similar to the overlying members 42, 43, 44 and 45 may be utilized for cooperation with the underside of the frame 16, in which case a second curtain may be attached to the underside of the frame 16 in a manner similar to that hereinabove described with the result that both of the curtains disposed on said frame 16 will be stretched simultaneously. Thus it is possible to utilize the same device for stretching a plurality of curtains at the same time in a single operation.

It will also be noted that the frame 16 may be provided intermediate the ends thereof with a transversely disposed member 70 which is constructed in the same manner as the end member 20 and which is provided adjacent its ends with the yokes or straps 71 by means of which it is secured to the frame 16 through the medium of the bolts 72, wing nuts 73 and coiled spring 74 surrounding said bolts. The yokes 71 are arranged to permit the passage therethrough of the longitudinal end members 18 and 19 so that the extension of these members would not be interfered with in the stretching operation. The member 70 is adapted to have associated therewith an overlying member similar in construction to the member 44 and to cooperate therewith in the same manner as the members 20 and 44 cooperate with each other. The purpose of this member 70 is to render the device capable of use with curtains of varying sizes.

It will also be noted that the arrangement of the pins 52 for engagement within the openings 53 and through the coils of the spring 47, will cause said blocks 46 and 33 to be separated equidistantly from each other, thereby assuring uniform stretching of the curtain 17 in all directions.

Prior to securing the members 42, 43, 44 and 45 in place upon the frame 16 and overlying the curtain 17, it may be desirable to provide some fastening means, such as tacks, adhesive, clips, or the like, associated with the blocks 33 for temporarily holding the edges of the curtain 17 in position. In the illustrated embodiment, I provide thin, telescoping curtain rods 80 which are inserted into the curtain heading, and if possible into a similar passageway or the like provided at the foot of the curtain. Openings at each end of the rod are adapted to engage studs 24.

It will be seen that the rod 80 is disposed on one end of the frame 16, such as for example over the member 20, and the entire curtain is then laid upon the remainder of the frame 16 and the opposite rod 80 is disposed upon the member 21. In this manner the entire curtain 17 may be prepared for fixation thereof to the frame by members 42, 43, 44 and 45 in a few simple operations. The curtain is obviously still in unstretched condition. The need for fastening the edges to individual pins, in the conventional tedious manner, is thus eliminated. This operation serves to simultaneously engage all points along the edges of the curtain prior to the stretching thereof by the mere application of the overlying members 42, 43, 44 and 45. This arrangement makes for a uniform stretching of the curtain, while at the same time minimizes the danger of injury to the curtain during the stretching operation.

It is believed that my invention, its mode of construction and assembly, and many of its advantages should be readily understood from the foregoing without further description, and it should also be manifest that while a preferred embodiment of the invention has been shown and described for illustrative purposes, the structural details are nevertheless capable of wide variation within the purview of my invention as defined in the appended claims.

What I claim and desire to secure by Letters Patent of the United States is:

1. In a curtain stretching device, a rigid framework, an inner framework adapted to have a curtain mounted thereon, means for supporting said inner framework and for expanding same, said inner framework being formed of side and end elements which are slidable relative to each other and are laterally rigid but longitudinally extensible whereby said curtain may be mounted thereon in unstretched condition and then be stretched upon the expansion of said inner framework, said support means comprising screw-threaded members mounted upon the extremities of said elements and slidably connected with said rigid framework and having means thereon capable of shortening the effective length thereof when it is desired to expand said inner framework.

2. In a curtain stretching device, a rigid framework, an inner framework adapted to have a curtain mounted thereon, means for supporting said inner framework and for expanding same,

said inner framework being formed of side and end elements laterally rigid but longitudinally extensible said elements being slidably connected to each other and to the rigid framework whereby said curtain may be mounted thereon in unstretched condition and then be stretched upon the expansion of said inner framework, each of said elements comprising a plurality of block members mounted upon and confined by telescoping means and being connected one to the other by an extensible member passing through the entire element.

3. In a curtain stretching device, a rigid framework, an inner framework adapted to have a curtain mounted thereon, means for supporting said inner framework and for expanding same, said inner framework being formed of side and end elements laterally rigid but longitudinally extensible said elements being slidably connected to each other and to the rigid framework whereby said curtain may be mounted thereon in unstretched condition and then be stretched upon the expansion of said inner framework, each of said elements comprising a plurality of block members mounted upon and confined by telescoping means and being connected one to the other by an extensible member passing through the entire element, each of said elements having means whereby the edge of a curtain may be mounted thereon.

4. In a curtain stretching device, a rigid framework, an inner framework adapted to have a curtain mounted thereon, means for supporting said inner framework and for expanding same, said inner framework being formed of side and end elements laterally rigid but longitudinally extensible said elements being slidably connected to each other and to the rigid framework whereby said curtain may be mounted thereon in unstretched condition and then be stretched upon the expansion of said inner framework, each of said elements comprising a plurality of block members mounted upon and confined by telescoping means and being connected one to the other by an extensible member passing through the entire element, each of said elements having means whereby the edge of a curtain may be mounted thereon comprising a second element of substantially similar construction adapted to overlie said first element and sandwich said curtain edge between said elements.

5. In a curtain stretching device, a rigid framework, an inner framework adapted to have a curtain mounted thereon, means for supporting said inner framework and for expanding same, said inner framework being formed of side and end elements laterally rigid but longitudinally extensible said elements being slidably connected to each other and to the rigid framework whereby said curtain may be mounted thereon in unstretched condition and then be stretched upon the expansion of said inner framework, each of said elements comprising a plurality of block members mounted upon and confined by telescoping means and being connected one to the other by an extensible member passing through the entire element, each of said elements having means whereby the edge of a curtain may be mounted thereon comprising a second element of substantially similar construction adapted to overlie said first element and sandwich said curtain edge between said elements and means for holding said first named elements in assembled condition with said second named elements.

6. In a curtain stretching device, a rigid frame, a secondary frame formed of side and end elements slidably connected to each other and to the rigid frame disposed within said rigid frame and having means whereby a curtain in unstretched condition may be mounted thereon, support means slidably connected with said rigid frame and maintaining said secondary frame in position and being contractible to expand said secondary frame after said curtain has been mounted to thereby stretch said curtain, said curtain mounting means including a second set of side and end elements slidably connected to each other and to the secondary frame capable of being extended longitudinally overlying the side and end elements of the secondary frame and sandwiching said curtain between said second set of elements and said secondary frame.

7. In a curtain stretching device, a rigid frame, a secondary frame formed of side and end elements slidably connected to each other and to the rigid frame disposed within said rigid frame and having means whereby a curtain in unstretched condition may be mounted thereon, support means slidably connected with said rigid frame and maintaining said secondary frame in position and being contractible to expand said secondary frame after said curtain has been mounted to thereby stretch said curtain, said curtain mounting means including a second set of side and end elements slidably connected to each other and to the secondary frame capable of being extended longitudinally overlying the side and end elements of the secondary frame and sandwiching said curtain between said elements and said secondary frame, said second set of elements and secondary frame having cooperating means for positively holding said curtain in said sandwiched position.

8. An extensible element for use in connection with a curtain stretching device, comprising a series of blocks, each having a curtain securing device thereon mounted upon and held in assembly by a contractile member, and means permitting only substantially equidistant spacing of said blocks when said element is extended.

9. An extensible element for use in connection with the expanding frame of a curtain stretching device comprising a series of block members mounted upon a contractile member, readily extensible telescoping members confining opposite edges of each of said block members and adapted to extend the entire length of said element, and means at opposite ends of said series of members for securing said contractile member.

10. An extensible element for use in connection with the expanding frame of a curtain stretching device comprising a series of block members mounted upon a contractile member, readily extensible telescoping members confining opposite edges of each of said block members and adapted to extend the entire length of said element, and means at opposite ends of said series of members for securing said contractile member, each of said block members being provided with a curtain holding pin passing through the center thereof and extending from the bottom thereof, said pins also serving to fix the position of said block members upon said contractile member relative to one another whereby when said element is extended, the block members will be substantially equidistant from one another.

11. In a curtain stretching device, a rigid outer framework, an inner framework comprising a plurality of laterally inflexible extensible ele-

ments joined into a substantially rectangular configuration, means connected between the extremities of said elements and said rigid framework for supporting said inner framework, means for mounting curtains upon said inner framework while in an unstretched condition, said connecting means at each corner of the inner framework being slidable relative to each other and said supporting means being provided with take up devices capable of shortening the effective lengths thereof and thereby lengthening said elements and expanding said inner framework when said unstretched curtain has been mounted thereon.

12. In a curtain stretching device, a rigid outer framework, an inner framework comprising a plurality of laterally inflexible extensible elements joined into a substantially rectangular configuration, means connected between the extremities of said elements and said rigid framework for supporting said inner framework, means for mounting curtains upon said inner framework while in an unstretched condition, said connecting means at each corner of the inner framework being slidable relative to each other and said supporting means being provided with take up devices capable of shortening the effective lengths thereof and thereby lengthening said elements and expanding said inner framework when said unstretched curtain has been mounted thereon, and means opposing the expansion of said inner framework comprising a coil spring within said extensible elements and adapted to be stretched upon the extension thereof.

BERNARD NELSON.