(No Model.)

# P. J. MABYE.

## BEVEL.

No. 456,044. Patented July 14, 1891.

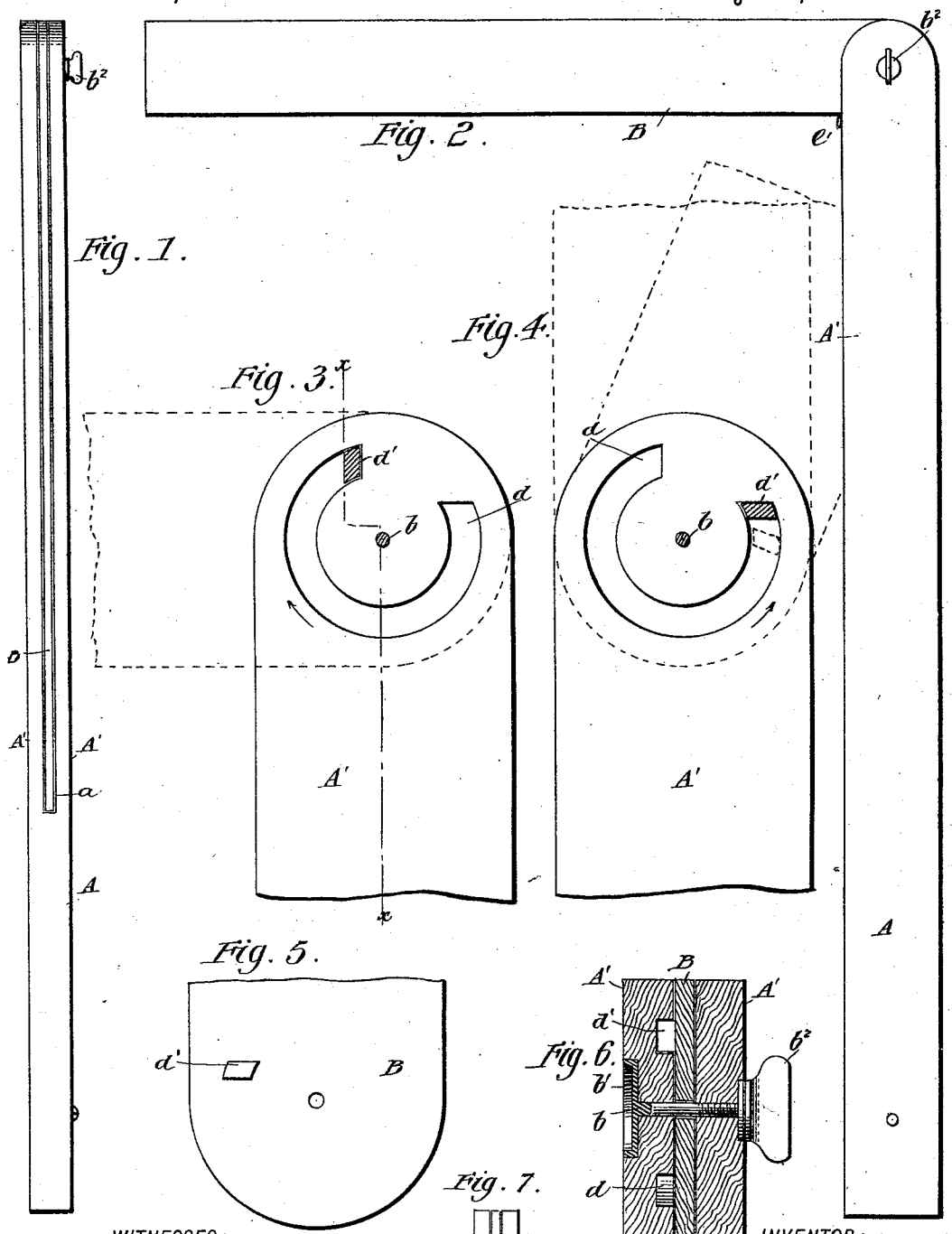


WITNESSES:
J. A. Clark.
C. Sedgwick

INVENTOR:
P. J. Mabye

BY

ATTORNEYS

THE NORRIS PETERS CO., PHOTO-LITHO., WASHINGTON, D. C.

# UNITED STATES PATENT OFFICE.

PETER J. MABYE, OF BROOKLYN, NEW YORK.

## BEVEL.

SPECIFICATION forming part of Letters Patent No. 456,044, dated July 14, 1891.

Application filed May 14, 1890. Serial No. 351,804. (No model.)

*To all whom it may concern:*

Be it known that I, PETER J. MABYE, of Brooklyn, in the county of Kings and State of New York, have invented a new and Improved Combined Bevel and Square, of which the following is a full, clear, and exact description.

My invention relates to improvements in bevels and squares such as are ordinarily used by carpenters; and the object of my invention is to produce a simple and inexpensive tool that may be used either as a square or a bevel and that can be easily and instantly changed from one to the other.

To this end my invention consists in a bifurcated handle having a blade pivoted therein and means for fixing the blade in a desired position. This construction will be hereinafter fully described, and pointed out in the claims.

Reference is to be had to the accompanying drawings, forming a part of this specification, in which similar letters of reference indicate corresponding parts in all the figures.

Figure 1 is a front elevation of the device. Fig. 2 is a side elevation with the blade extended in position to be used as a square. Fig. 3 is an inner side elevation of one member of the handle in part, showing the groove therein, with the stop which limits the movement of the blade in position, the blade being removed and its position when set for use as a square indicated by dotted lines. Fig. 4 is a similar view, but showing the parts when in use as a bevel. Fig. 5 is a partial face view of one side of the pivoted end of the blade. Fig. 6 is a broken longitudinal section of the tool on the line $x\ x$ of Fig. 3, and Fig. 7 is a broken front elevation of the tool with the blade in position for use as a square and showing the spring for holding the blade in position.

The handle A of the device is provided with straight edges and has a longitudinal slot $a$ extending through a portion of its length, thus forming the parallel members A′, between which is pivoted the blade B, the blade being of the same length as the slot $a$ and of the same width as the members A′, said blade being pivoted between the outer ends of the members A′ by the screw $b$, which has a flattened head $b'$ countersunk in one of the members A′, and which projects through both members and the blade B, and is provided at its opposite end with a thumb-nut $b^2$, by means of which the blade B may be fixed in a desired position when used as a bevel, the blade being fixed by merely tightening the thumb-nut.

One of the members A is provided upon its inner surface with a segmental groove $d$, the center of which coincides with the axis of the screw $b$, the ends of the groove being at the right angles to each other. One end of the groove is adjacent to the end of the member A′ and the other end to the side of the same, the ends being positioned in such a manner that when the stop $d'$ on the blade B comes in contact with the portion of the groove nearest the end of the member A′ said blade will extend at right angles to the member A′ and the device will be adapted for use as a square, and when the blade is turned in an opposite direction the groove will permit it to be moved into alignment with the members A′; but it may be stopped in any position and held by tightening the thumb-nut $b^2$, thus adapting it for use as a bevel. The stop $d'$ projects from one side of the blade B and fits closely in the groove $d$, so that the movement of the blade B will be thereby guided and limited, as above described.

One of the members A′ is provided with a recess $e^2$ adjacent to the blade B, and fixed in the recess is a spring $e$, which presses against the blade, and when the blade is in position for use as a square the spring moves beneath the lower edge of the blade and prevents it from dropping back toward the handle A. The spring E is provided with an outwardly-extending portion $e'$, which projects from the recess $e^2$, so that the spring may be pressed within the recess by the thumb when the blade B is to be closed.

It will be seen that when the device is used as a square the blade B will extend from the opposite side of the member A′ from what it does when it is used as a bevel, and the device may be changed from one tool to the other by simply swinging the blade through the slot $a$.

Having thus fully described my invention, I claim as new and desire to secure by Letters Patent—

1. A combined bevel and square consisting of a bifurcated handle having a transverse screw through its outer end provided with a thumb-nut, and a segmental groove concentric with said screw, and a blade within the handle provided with a projection to enter said groove, and a small round aperture through which said screw passes to permit the blade to swing, but prevent longitudinal movement, said blade being adapted to be swung at its distal end outward from the handle in either direction and be clamped by said screw and nut, substantially as set forth.

2. A combined bevel and square consisting of the bifurcated handle A, provided with a transverse screw at its outer end, and a recess $e^2$ in the outer edge of one of its members below the said screw, a spring-catch *e*, mounted in said recess and projecting into the bifurcation or slot of the handle and provided with an outward-extending operating portion *e'*, and the oppositely-swinging blade having an aperture, through which passes the said screw and adapted to rest at one edge on the said spring when swung at right angles to the handle, substantially as set forth.

3. In a combined bevel and square, the combination, with a bifurcated handle having a segmental annular groove in one member near the end thereof, of a blade pivoted between the members of the handle and adapted to extend therefrom, said blade having a stop thereon to move in the said groove and limit the movement of the blade, substantially as described.

PETER J. MABYE.

Witnesses:
THEODORE E. GREEN,
JOHN H. TEVES.