(12) PATENT
(19) AUSTRALIAN PATENT OFFICE

(11) Application No. **AU 199647919 B2**
(10) Patent No. **702382**

(54) Title

Equipment and method for the damping of oscillations at a lift cage

(51)[6] International Patent Classification(s)
B66B 007/00 F16F 015/03

(21) Application No: 199647919 (22) Application Date: 1996.03.07

(30) Priority Data

(31) Number	(32) Date	(33) Country
00694/95	1995.03.10	CH

(43) Publication Date : 1996.09.19
(43) Publication Journal Date : 1996.09.19
(44) Accepted Journal Date : 1999.02.18

(71) Applicant(s)
Inventio AG

(72) Inventor(s)
Ayman Hamdy; Josef Husmann

(74) Agent/Attorney
WATERMARK PATENT TRADEMARK ATTORNEYS,Locked Bag 5,HAWTHORN VIC 3122

(56) Related Art
US 5322144
US 5304751
US 5597988

AU9647919

(12) PATENT ABSTRACT (11) Document No. AU-A-47919/96
(19) AUSTRALIAN PATENT OFFICE

(54) Title
EQUIPMENT AND METHOD FOR THE DAMPING OF OSCILLATIONS AT A LIFT CAGE

(51)[6] International Patent Classification(s)
B66B 007/00 **F16F 015/03**

(21) Application No. : **47919/96** (22) Application Date : **07.03.96**

(30) Priority Data

(31) Number	(32) Date	(33) Country
694/95	**10.03.95**	**CH SWITZERLAND**

(43) Publication Date : **19.09.96**

(71) Applicant(s)
INVENTIO AG

(72) Inventor(s)
AYMAN HAMDY; JOSEF HUSMANN

(74) Attorney or Agent
WATERMARK PATENT & TRADEMARK ATTORNEYS , Locked Bag 5, HAWTHORN VIC 3122

(57) Claim

1. Equipment for the reduction of oscillations of a lift cage (1), which is guided at rails (3) and displays guide elements (21), which are connected with it to be movable between abutments (38, 39), wherein oscillations arising transversely to the direction of travel are measured by inertia sensors (11) mounted at the cage (1) and used for the regulation of at least one actuator (6), which is arranged between the cage (1) and the guide elements (21) and operates simultaneously with the arising oscillations and oppositely to the direction of the oscillations, characterised thereby that the or each actuator (6) is equipped with a respective linear motor (7), wherein the stationary motor part (16) is fastened at the frame of the cage (1) and the movable motor part (17) is fastened at the guide elements (21).

8. Method according for the reduction of oscillations of a lift cage (1), which is guided at rails (3) and displays guide elements (21), which are connected with it to be movable between two abutments (38, 39), wherein oscillations arising transversely to the direction of travel are measured by inertia sensors (11) mounted at the cage (1) and used for the regulation of at least one actuator (6), which is arranged between the cage (1) and the guide elements (21) and operates simultaneously with the arising oscillations and oppositely to the direction of the oscillations, characterised thereby that the

.../2

actuators (6) are equipped with regulated linear motors (7) or regulated rotary drives (43), wherein the regulation takes place through the outputs, which are combined into one force target value, of two regulators, a rapid acceleration return movement and a slow position return movement.

6. Equipment for the reduction of oscillations of a lift cage (1), which is guided at rails (3) and displays guide elements (21), which are connected with it to be movable between two abutments (38, 39), wherein oscillations arising transversely to the direction of travel are measured by inertia sensors (11) mounted at the cage (1) and used for the regulation of at least one actuator (6), which is arranged between the cage (1) and the guide elements (21) and operates simultaneously with the arising oscillations and oppositely to the direction of the oscillations, characterised thereby that the actuators (6) are equipped with rotary drives (43), wherein the movable motor part is fastened at the guide elements (21) by way of a crank (44) and a tension-compression member (45).

P/00/011 28/5/91
Regulation 3.2(2)

AUSTRALIA

Patents Act 1990

ORIGINAL
COMPLETE SPECIFICATION
STANDARD PATENT

Application Number:

Lodged:

Invention Title: EQUIPMENT AND METHOD FOR THE DAMPING OF OSCILLATIONS AT A LIFT CAGE

The following statement is a full description of this invention, including the best method of performing it known to us :-

EQUIPMENT AND METHOD FOR THE DAMPING OF OSCILLATIONS AT A LIFT CAGE

Field of the Invention

The invention concerns an equipment and a method for the damping of oscillations at a lift cage which is guided at rails by guide elements which are connected with the lift cage, the guide elements being movable between two end settings, wherein oscillations arising transversely to the direction of travel are measured by several inertia sensors mounted at the cage and used for the regulation of actuators arranged to move the guide elements simultaneously with the arising oscillations and oppositely to the direction of the oscillations.

Background and Prior Art to the Invention

Transverse oscillations are present at lift cages during travel in a liftshaft by reason of uneven guide rail surfaces, slipstream induced movement, as consequence of one-sided traction forces imparted by the traction cable or as a result of positional changes of the load in the lift cage during travel.

A method for the damping of such oscillations in a lift cage or a part thereof is known from the US-PS 5 027 925. The method described there includes to ascertain the undesired transverse accelerations, and to exert corresponding counterforces on the cage by a vibration damper which is arranged between the cage and its supporting frame. This method, however, requires an expensive floating bearing arrangement of the cage in the cage frame, which apart from the high apparatus expenditure entails substantial additional space requirements. Beyond that, the damping force acts on the frame, which in the case of low frequencies can cause a jerky knocking to and fro of the same between the guides. Such a system is hardly manageable in terms of regulation technique.

US patent document 5,322,144 (Skalski et al) describes a control system for active damping of lift cages. The system incorporates two separately working damping regulators, one to ensure position return of the lift cage to its set value and the other one to ensure acceleration return, i.e. counter the accelerations associated with the oscillations. The regulators in turn operate two distinct

AUSTRALIAN PATENT OFFICE

damping actuators that are provided for each of the guide elements supported at the liftcage and which interact with the lift shaft rails, namely an actuator motor and a reversible electric motor as illustrated in figures 30 and 31 and described in columns 23 and 24 of the US patent document.

US patent document 5,304,751 (Skalski et al) and its counterpart European patent document EP-A-0641735 (Otis Elevator Company) describe a control system for active vibration damping of lifts in which actuators located on the lift cage act on the guiding elements (rollers) of the lift cage. The otis system employs two independently working actuators per guiding roller in order to achieve vibration control and reduction. A first electro-mechanic actuator responds to correction signals for the orientation of the lift cage generated by a centering controller in response to signals received from a position/location sensor. A second electro-mechanic actuator responds directly to control signals provided by acceleration sensors. Accordingly, vibration damping at each guiding roller is effected by way of two independently working and non-synchronised controllers.

The present invention seeks to provide a simplified method and equipment for oscillation damping at a lift cage, thereby to achieve a satisfactory damping of different oscillations acting on the cage at all times.

Summary of the Invention

In a first aspect thereof, the present invention provides an apparatus for the reduction of oscillations of a lift cage which is guided at rails in a lift shaft by way of guide elements which are supported at the lift cage for restricted movement between opposite end settings, the apparatus including:

a number of inertia sensors mountable at the lift cage for measuring oscillations of the lift cage in directions transversely to a direction of travel of the lift cage and generating signals indicative of such oscillations;

a plurality of regulator operated actuators, one actuator associated with each of the guide elements and arranged to move the respective guide element in response to an actuator operating signal;

a first regulator arranged to generate lift cage acceleration return movement signals in response to oscillation signals from the inertia sensors,

AUSTRALIAN PATENT OFFICE

acceleration return movement being intended to compensate for lift cage oscillations;

a second regulator arranged to generate lift cage position return movement signals to compensate for position shifts of the lift cage with respect to the rails;

means for combing the acceleration return and position return movement signals and generating individual force target value signals for each of the actuators such that the actuators are operated by the respective individual force target value signals simultaneously with the arising oscillations and in respective directions to counter the oscillations.

The use of a respective linear motor for each actuator is a particularly advantageous further improvement because these motors can produce great dynamic and static forces and have a low energy consumption. Moreover, they display a low weight and small moved masses and are relatively simple to regulate.

In another aspect, the invention provides a method for the reduction of oscillations of a lift cage which is guided at rails in a lift shaft by way of guide elements which are supported at the lift cage for restrict movement between opposite end settings, the method including the steps of:

providing for each guide element a single actuator arranged to move the guide element in regulated manner;

measuring oscillations of the lift cage in directions traversely to a direction of travel of the lift cage by way of inertia sensors and generating signals representative of the measured oscillations;

measuring the position of the lift cage relative to the guide rails and generating position signals representative of lift cage position; and

regulating movement of the actuators simultaneously with the arising oscillations and in respective directions to counter the measured oscillations and lift cage position shifts in such a manner that respective force target values required by the respective actuators to controllably move the respectively associated one of the guide elements are computed by superimposing outputs from a first regulator which provides rapid lift cage acceleration return movement

AUSTRALIAN PATENT OFFICE

control as a function of the oscillation signals and a second regulator which provides slow lift cage position return movement control as a function of the position signals.

With the invention, transverse accelerations that are experienced during movement of the lift cage are countered by counter-indicating acceleration movements exerted on the guide elements by the responsible actuators so that transverse forces acting directly on the cage are reduced so far that they are no longer perceivable in the cage. The equipment for oscillation damping remains capable of functioning even in the case of one-sided loading; the slow position return movement imparted on the guide elements by way of the controller regulated actuators enables the equipment to readjust or center itself automatically in the case of one-sided oblique position of the cage relative to the guide rails, so that an adequate damping travel is maintained for oscillation control via the acceleration movement return control.

The apparatus expenditure for the performance of the method is low and the rapidly moved masses are very small. This is also achieved by all measurement signals being fed to a common regulation loop and this acting on only a single actuator for each guide element. Beyond that, structural resonances can be suppressed through adaptation of the frequency response of the regulator.

In particular, the slow position return movement for the resetting of the guide elements into the mid-position is advantageous. As a result, the guide elements need not be reregulated unnecessarily for brief one-sided displacements that would otherwise be compensated for.

Advantageous developments and improvements of the invention will become clearer from the following description of a preferred (but only illustrative) embodiment thereof which is given with reference to the accompanying drawings in which:

Brief Description of the Drawings

Figure 1 is a schematic illustration of a lift cage guided at rails,

Figure 2 is a schematic illustration of an actuator in form of a linear motor,

Figure 3 is a front elevation of a roller guide,

AUSTRALIAN PATENT OFFICE

Figure 4 is a side elevation of a roller guide,

Figures 5a, 5b and 5c show three variants of a rotary drive that can serve as an actuator,

Figure 6a illustrates schematically a lift cage with actuators and sensors in x_k direction,

Figure 6b illustrates schematically a lift cage with actuators and sensors in y_k direction,

Figure 7 illustrates schematically the regulator part of an active damping system according to the invention; and

Figure 8 illustrates the regulation diagram for the entire damping system employed in the lift system illustrated in figures 1 and 6.

AUSTRALIAN PATENT OFFICE

Fig. 1 shows a schematic illustration of the equipment according to the invention. A cage 1 is guided by means of roller guides 2 at rails 3, which are mounted in a not shown shaft. The cage 1 is borne elastically in a cage frame 4 for passive oscillation damping. Serving for this are rubber springs 4.1, which are designed to be relatively stiff in order to suppress the occurrence of low-frequency rotary oscillations about the y axis. The roller guides 2 are mounted laterally at the cage frame 4 below and above. They consist of a post 5, actuators 6 and guide elements in the shape of two lateral rollers 8 and a middle roller 9, which is turned through 90° relative thereto, each time.

Unevennesses in the rails 3, one-sided traction forces of the traction cables or positional changes of the load during the travel cause oscillations of the cage frame 4 and the cage 1 and thus impair the travel comfort. Such oscillations of the cage 1 are to be reduced. Two position sensors 10 per roller guide 2 measure the respective spacing of the cage 1 from the rail 3. At least three or five inertia sensors 11 measure the oscillations or accelerations occurring transversely to the cage 1. The inertia sensors 11 are preferably arranged in the axis through the centre of gravity of the cage and spaced one far apart from the other in pairs in order also to be able to detect rotations about the z axis. Beyond that, shocks produced by wind and cable forces are well detected thereby.

The actuators 6, which are arranged at the roller guides 2 and operate simultaneously with the occurring oscillations and oppositely to the direction of the oscillations, are regulated by processing of the measured values. Thereby, a damping of the oscillations acting on the cage 1 is achieved. Oscillations are so reduced that they no longer act on the cage 1 in a manner perceivable by the passenger. Each roller guide 2 is equipped with two actuators 6. Thereby, five degrees of freedom or axes of the cage 1 can be regulated: displacement in y and x direction as well as rotation about the x, y and z axes.

The possibility also exists of equipping only both the lower roller guides 2 each with two respective actuators 6. Thereby, the three degrees of freedom in one plane or three axes can be regulated:

displacement in x and in y direction as well as rotation about the z axis according to the co-ordinate system in Fig. 1.

Fig. 2 shows a linear motor 7 of an actuator 6 according to the equipment according to the invention. The linear motor 7 is based on the principle of the moved magnet. It consists of a laminated stator 16 provided with windings 15 and a movable motor part 17 constructed as magnet. A magnet 18 is mounted at the movable motor part 17. Advantages of the linear motor 7 are its simple regulability as well as low weight and small moved masses and a great dynamic and static force (for example 2000 newtons) for small energy consumption.

Figs. 3 and 4 show a roller guide according to the equipment according to the invention. The post 5 is fastened at the cage frame 4 by means of fastening elements 19. Each roller guide 2 is equipped with two actuators 6, which are each equipped with a respective linear motor 7. One linear motor displaces the middle roller 9 and the other linear motor 7 both the lateral rollers 8. The rollers 8 and 9 are fastened by means of axle pins 20 at roller levers 21. The roller levers 21 of both the lateral rollers 8 are connected together by way of a tie rod 22. For the transmission of the movements emanating from the actuators 6, the roller levers 21 are connected with the post 5 articulatedly and with low friction by means of axle pins 23 or the roller levers 21 of both the lateral rollers 8 are connected with the tie rod 22 articulatedly and with low friction by means of axle pins 24. Guide rods 25 with contact pressure springs 26 are mounted at the posts 5. The contact pressure springs 26 are each time fixed at the outer end 27 of the guide rods 25. The guide rods 25 extend through a passage 28 in the roller levers 21 so that the contact pressure springs 26 bear on the outward sides 29 of the roller levers 21 and urge the rollers 8 and 9 against the guide rail 3.

A fastening plate 30 is mounted at the post 5 by means of fastening elements 31 such as screws. The stators 16 of the actuators 6 are screwed to the fastening plate 30 by means of fastening elements 32. The movable motor part 17 is connected by means of screws 33 at the roller lever 21 and thus with the rollers 8 and 9. In order that the air gap 34 of the linear motor 7 remains

maintained, a lateral guide is still required. This consists of ball-borne rollers 35 and is almost free of friction. Two brackets 36 enable the mounting of the ball-borne rollers 35 and form the lateral boundaries of the movable motor part 17. A low-friction bearing is necessary in order to be able to control the force to be produced by the actuator 6 accurately. The length of the stator 16 of the linear motor 7 determines the maximum possible inner and outer end settings starting out from a mid-setting 37. The travel limitation takes place through elastic abutments 38 and 39.

A variant consists in connecting the movable motor part 17 with the roller lever 21 by way of a tension-compression member. The bearing of the movable motor part 17 then takes place independently of the roller lever 21.

Due to the parallel connection of the contact pressure spring 26 with the actuator 7, the roller guide 2 remains capable of function also in the case of a partial or complete failure of the active oscillation damping, since the contact pressure springs 26 urge the rollers 8 and 9 against the guide rail 3 independently of the actuator 6.

The Figs. 5a, 5b and 5c show variants using a rotary drive 43 in place of the linear motor 7. This drive displays a pivot angle of about 90 degrees and drives the roller lever 21 by a crank 44 and a tension-compression member 45 (Fig. 5a) or a flexible traction means 46 (Fig. 5b) or by a cam disc 47 (Fig. 5c).

Figs. 6a and 6b show a lift cage 1 with actuators and sensors in x_k direction or in y_k direction according to the equipment according to the invention. For simplification of the illustration, the x_k and the y_k directions are each illustrated separately.

The regulation for the suppression of the cage oscillations and for the correction of the setting of the cage 1 relative to the two guide rails 3 is based on a dynamic model of the system. This model is a mathematical description which combines all present practical and theoretically experiences with the system. The cage oscillations which are to be damped by this equipment, occur in the following degrees of freedom:

- a displacement x_k in x_k direction,
- a rotation φ_{ky} about the y_k axis,
- a displacement y_k in y_k direction,
- a rotation φ_{kx} about the x_k axis and
- a rotation φ_{kz} about the z_k axis.

The system model describes the dynamics of the lift system in all degrees of freedom mentioned above. This model also takes into account all relative structural resonances which arise due to the elasticities between the different masses as well as within the cage frame 4.

Based on the system model, a regulator is used, which treats all degrees of freedom described from the model at the same time. For this purpose, the methods of the robust multimagnitude regulation are used (multi-input, multi-output or MIMO Robust Design). These methods use the system model that is present in order to design a regulator based on the observer. The observer is a dynamic part of the regulator and has the task of estimating all not directly measurable movement states (for example speeds and positions of the different masses) in real time on the basis of the available measurements (for example acceleration at different measurement points). Thus, the regulator will have a maximum of information data about the system available to it. Based on all movement states and not only on their measurable part, the regulator supplies the best answer for each degree of freedom, which substantially improves the quality of the regulation. Since the model and the observer based thereon takes all relevant structural resonances into account, the regulator does not excite any of these resonances. The model-based regulation takes care of the necessary stability of the system. This would not be the case if the system dynamics were not taken into consideration in the regulator design.

The robust regulator is so designed that it is effective in only a certain frequency range in order that it does not react to undesired frequency-dependent system dynamics and disturbances. This is done without having to connect additional filters to the regulator.

Additional filters can restrict the effectiveness of the regulator and easily lead to instabilities. They also increase the computing effort of the regulating algorithm substantially. A further advantage of the robust design method is the consideration of the model error during the design. This is done in that the inaccuracies of the model are quantified as frequency-dependent magnitudes and also taken into consideration in the regulator design. Thus, the resultant regulator displays sufficient robustness against possible disturbances and modelling errors.

The first target of the regulator is the suppression of the cage oscillations in the range between 0.9 and 15 hertz without the regulated lift being poorer outside this range than the unregulated one. On the other hand, the regulator must take care that the setting of the cage frame 4 relative to the two guide rails 3 is so regulated that it gives a sufficient damping travel at each roller 8 and 9. This is particularly important when the cage 1 is loaded obliquely. For the first purpose of regulation, an acceleration return movement or a speed return movement by inertia sensors 11 should suffice, wherein a position return movement is necessary for the second object of regulation. If the absolute position of the cage 1 could be measured and fed back for the regulation, the second return movement would have no conflict with the first one. Since however only measurements of the relative positions between the rollers 9 and the cage frame 4 are at disposal, the absolute position of the cage 1 cannot be measured, but only the position of the cage 1 relative to the guide rails 3. The position return movement should keep the plays constant between the frame 4 and the roller lever 21, which is nothing other than following the unevennesses of the rails. For that reason, the two return movements have two conflicting objects. In order to avoid the conflict between acceleration (or speed) and position return movement, the following strategy is followed:

Two regulators are used for the production of a common output signal. The first regulator disposes of the measurements from the inertia sensors 11 alone and is therefore responsible for the suppression of the oscillations. The second regulator disposes of the position

measurements alone and is responsible for the guide plays of the cage 1. The target values of the forces, which the first regulator demands of the actuators 6, are added to the corresponding magnitudes of the second regulator. The solution for avoidance of the conflict between both regulators is based on the circumstance that the forces (a not symmetrical loading of the cage, a great lateral cable force and so forth), which are responsible for the oblique position of the cage 1, change substantially more slowly than the other other disturbance sources which cause the cage oscillations (mainly rail unevennesses and air disturbance forces). For that reason, the position regulation, which is more likely to be harmful to the suppression of the oscillations, is limited to 0 to 0.7 hertz in order that no disadvantageous influence on the suppression of the oscillations is present, because these function only above 0.9 hertz. The return movement of the signals from the inertia sensors 11 must not be effective in the frequency range below 0.9 hertz in order that the sensor zero error and, in the case of an acceleration sensor, the measured part of the gravitation, which is not constant because of the tilting movement, has no influence on the position regulation. Thereby, the danger of an excess control of the actuators 6 is also avoided. For this purpose, the limitation of the bandwidth of each return movement loop by means of the robust design method is particularly important.

A further advantage of this solution lies in that the regulator contains no non-linearity. A non-linearity makes the stability analysis very difficult even when it is possible at all. Since the two return movements are designed at the same time, the method takes both regulating loops into consideration in the stability analysis.

The mounting of the inertia sensors 11 on the cage frame 4 instead of on the cage body 1 or on the roller guides 2 is particularly advantageous for an efficient regulation. If the sensors were to be mounted on the cage body 1, the measurements would display appreciable phase losses which are due to the elastic suspension of the cage 1. Far higher oscillation amplitudes occur at the roller guides and the influence of gravity would have to be compensated for.

The regulators are designed for the system in the cage co-ordinate system. The measurements are imaged from the co-ordinate system of each sensor to the cage body co-ordinate system with the aid of different linear transformations. A different transformation cage co-ordinate system to the actuator co-ordinate system is necessary for the output of the force target values.

The active system for the damping of the cage oscillations and for the setting correction of the cage 1 in five degrees of freedom (x_k, φ_{ky}, y_k, φ_{kx}, φ_{kz}) consists of the following elements:

- Eight linear motors 7 or rotary drives 43,
- Eight amplifiers and force regulators 50 for the linear motors 7 or rotary drives 43,
- Five inertia sensors 11 (acceleration or speed pick-ups)
- Five voltage/current converters 51 for the outputs of the inertia sensors 11 and
- Eight position sensors 10.

In the case of a cheaper version of the active system, only three degrees of freedom of the cage are regulated (d_k, y_k, φ_z). For that reason, linear motors 7 and sensors 10 and 11 are mounted only below. The computing effort is substantially smaller in this case, which enables the application of a slow real time computer of favourable costs.

Fig. 7 shows the regulator part of the active system according to the equipment according to the invention. Since the spacings between the sensors and an analog-to-digital converter unit 55 are relatively long, the measurement signals must be transmitted as current signals and not as voltage signals. The position sensors 10 delivery their output signals already as current. Thereagainst, the inertia sensors 11 deliver their outputs in the form of voltage signals. In this case, a voltage-to-current converter 51 becomes necessary for the output of each inertia sensor 11. Since the analog-to-digital converters 55 can scan only voltage signals, an analog signal processing unit 56 with one channel for each measurement signal is used on the part of the real time computer 57. A channel consists of a current-to-voltage converter 58, an anti-aliasing low-pass filter 59, which is necessary for the scanning, and a conventional voltage amplification 60 for matching the signal range.

The core of the real time computer 57 is represented by the digital signal processor 61, which is responsible for all mathematical computations. A multichannel analog-to-digital converter unit 55 is used to be able to detect the necessary measurements from the hardware. A multichannel digital-to-analog converter unit 63 is utilised for the delivery of the force target values to the linear motors 7. The entire regulator algorithm with all necessary programs is stored in an EEPROM 64. This program is supplied by a host computer 65 on the commissioning of the active system and matched to the cage 1 to be regulated. After the commissioning, the host computer 65 is uncoupled, whilst the program stored in the EEPROM 64 remains there until it is modified or replaced by the host computer 65 during the next calibration. A RAM 66 is used by the digital signal processor 61 as storage device for the intermediate values of the computations. A data bus 67 is used for the communication between the digital signal processor 61 and all these components. A module, which is responsible for the connection with the host computer, in the shape of a communication port 68 is also connected to this data bus 67.

The possibility of dividing the computing task between two digital signal processors 61, which are connected to the same data bus 67, is possible in case the problem cannot be solved sufficiently rapidly by a single signal processor 61.

Fig. 8 shows the regulation diagram for the entire system according to the equipment according to the invention. The real time computer 57 is so programmed in this application that it computes through the regulating algorithm at a certain frequency in real time.

The algorithm consists of the following steps which need not necessarily be executed in the stated sequence:

- The processing of the measurements from the five inertia sensors 11 on the cage frame 4 in x_k as well as in y_k direction. The measured signals are converted in voltage-to-current converters 51 and transmitted through the analog signal-processing unit 56 and scanned by the analog-to-digital converter channels 55.

- The aforementioned measurements are present in the co-ordinate systems of the inertia sensors 11. Since the regulation occurs in the cage co-ordinate system, they must be transformed into this co-ordinate system. For this purpose, the algorithm uses the linear transformation T_{KT}. The outputs of this transformation are:
  - The translational acceleration (or the translational speed) of the cage 1 in x_k direction ($\ddot{x}_k$ or $\dot{x}_k$).
  - The rotational acceleration (or the rotational speed) of the cage 1 about the y_k axis ($\ddot{\varphi}_{ky}$ or $\dot{\varphi}_{ky}$).
  - The translational acceleration (or the translational speed) of the cage in y_k direction ($\ddot{y}_k$ or $\dot{y}_k$).
  - The rotational acceleration (or the rotational speed) of the cage 1 about the x_k axis ($\ddot{\varphi}_{kx}$ or $\dot{\varphi}_{kx}$).
  - The rotational acceleration (or the rotational speed) of the cage 1 about the z_k axis ($\ddot{\varphi}_{kz}$ or $\dot{\varphi}_{kz}$).

The target value for each of these magnitudes is zero. For that reason, the five signals are subtracted from zero before they are passed over to the robust multimagnitude regulator I. This regulator I reacts to the five signals simultaneously according to the concept described above and supplies the following signals at the output:

- A force target value F^T_{xs} in x_k direction,
- A torque target value M^T_{ys} about the y_k axis,
- A force target value F^T_{ys} in y_k direction,
- A torque target value M^T_{xs} about the x_k axis and
- A torque target value M^T_{zs} about the z_k axis.

The target values from the regulator I are transformed into the actuator co-ordinate systems with the aid of a linear transformation T^T_{AK}.

- The measurements from the position sensors 10 in x_k direction and in y_k direction. The measured signals are transmitted through the analog signal-processing unit 56 and scanned by analog-to-digital converter channels 55. Since these measurements are present in the position sensor co-ordinate system, they must be transformed into the cage co-ordinate system. A linear transformation T_{KP} is used

for this. This transformation supplies five position signals as output. In order to obtain the position error signals, each of these signals is subtracted from zero. Thus, two translational position error signals (x^{E}_{K} and y^{E}_{K}) and three rotational position error signals (φ^{E}_{Kx}, φ^{E}_{Xy} and φ^{E}_{Kz}) are obtained.

- A robust multimagnitude regulator II according to the aforementioned design reacts to the five position errors and supplies the following target values as output for the correction of the lift setting:
  - The force target value F^{P}_{xs} for the displacement in x_k direction,
  - The torque target value M^{P}_{ys} for the rotation about the y_k axis,
  - The force target value F^{P}_{ys} for the displacement in y_k direction,
  - The torque target value M^{P}_{xs} for the rotation about the x_k axis and
  - The torque target value M^{P}_{zs} for the rotation about the z_k axis.
- The target values from the regulator II are transformed into the actuator co-ordinate system with the aid of the linear transformation T^{P}_{AK}. The difference between both the linear transformations T^{T}_{AK} and T^{P}_{AK} lies in that the force target values, which result from the second transformation, of the linear motors 6 cause only compression forces on the rails 3 in x_k direction. This is achieved in that a single actuator is actuated in x_k direction below and a single actuator in x_k direction above simultaneously by the regulator II. Thus, it is made certain that none of the four rollers 9 loses contact with the guide rails 3 in x_k direction. This is not possible in the case of the first transformation, because it demands substantially lower forces than the second transformation.
- The corresponding outputs of the two transformations T^{T}_{AK} and T^{P}_{AK} are added together in order to compute the force target values for each of the eight linear motors 7.
- The force target values are converted into analog signals by the digital-to-analog converter channels 63. The resultant signals drive the corresponding power amplifiers and force regulators 50,

which regulate the currents of the linear motors 7 by analog return movements. The power amplifiers 50 are modulated in pulse width. The cage frame 4 is now so influenced by the resultant forces that the two objects of regulation are achieved. Should the respective force target value assume the value of zero (in case of trouble-free travel), then the associated actuator exerts no forces.

The execution of all linear transformations as well as the computation of the regulator algorithm is performed by the digital signal processor 61 in each scanning period.

THE CLAIMS DEFINING THE INVENTION ARE AS FOLLOWS:

1. Apparatus for the reduction of oscillations of a lift cage which is guided at rails in a lift shaft by way of guide elements which are supported at the lift cage for restricted movement between opposite end settings, the apparatus including:

a number of inertia sensors mountable at the lift cage for measuring oscillations of the lift cage in directions transversely to a direction of travel of the lift cage and generating signals indicative of such oscillations;

a plurality of regulator operated actuators, one actuator associated with each of the guide elements and arranged to move the respective guide element in response to an actuator operating signal;

a first regulator arranged to generate lift cage acceleration return movement signals in response to oscillation signals from the inertia sensors, acceleration return movement being intended to compensate for lift cage oscillations;

a second regulator arranged to generate lift cage position return movement signals to compensate for position shifts of the lift cage with respect to the rails;

means for combing the acceleration return and position return movement signals and generating individual force target value signals for each of the actuators such that the actuators are operated by the respective individual force target value signals simultaneously with the arising oscillations and in respective directions to counter the oscillations.

2. Apparatus in accordance with claim 1, wherein the actuators are linear motion motors having a stationary motor part fastened at a frame of the lift cage and a moveable motor part fastened at the respectively associated one of the guide elements.

3. Apparatus in accordance with claim 2, wherein the stationary motor part includes a laminated stator with a winded coil and the moveable motor part includes a magnet.

AUSTRALIAN PATENT OFFICE

4. Apparatus in accordance with claim 2 or 3, wherein the guide elements include a roller lever which is articulately mounted at the lift cage and which supports a roller that engages the guide rail, the movable motor part being fastened to the roller lever.

5. Apparatus in accordance with claim 4, wherein a tension - compression member is used to fasten the moveable motor part to the roller lever.

6. Apparatus in accordance with anyone of claims 2 to 5, wherein a low-friction guide is provided for maintaining an air gap between the moveable and the stationary motor parts.

7. Apparatus in accordance with claim 4, 5 or 6, wherein the roller lever is biased to maintain contact between the roller and the guide rail independently of actuator operation.

8. Apparatus in accordance with claim 1, wherein the actuators are rotary drive units having a moveable part connected with the respectively associated one of the guide elements by way of crank and a coupling member selected from the group consisting of a camplate, a flexible traction member and a tension-compression member.

9. Apparatus in accordance with anyone of the preceding claims, wherein the first and second regulators are implemented as a computing program in a digital signal processor.

10. A method for the reduction of oscillations of a lift cage which is guided at rails in a lift shaft by way of guide elements which are supported at the lift cage for restrict movement between opposite end settings, the method including the steps of:

providing for each guide element a single actuator arranged to move the guide element in regulated manner;

measuring oscillations of the lift cage in directions traversely to a direction of travel of the lift cage by way of inertia sensors and generating signals representative of the measured oscillations;

AUSTRALIAN PATENT OFFICE

measuring the position of the lift cage relative to the guide rails and generating position signals representative of lift cage position; and

regulating movement of the actuators simultaneously with the arising oscillations and in respective directions to counter the measured oscillations and lift cage position shifts in such a manner that respective force target values required by the respective actuators to controllably move the respectively associated one of the guide elements are computed by superimposing outputs from a first regulator which provides rapid lift cage acceleration return movement control as a function of the oscillation signals and a second regulator which provides slow lift cage position return movement control as a function of the position signals.

11. Method according to claim 10, wherein a robust multimagnitude regulation design is used for the regulators.

12. Method according to claim 11, wherein the controllers for lift cage oscillation reduction and positional correction employ a flexible body dynamic model that takes into account relative structural resonances which arise due to elasticity between different masses of the lift system as well as within the lift cage, and which model describes the dynamics of the lift cage in the following degrees of freedom:

a displacement x_k in x_k direction;

a rotation φ_{ky} about the y_k axis;

a displacement y_k in y_k direction;

a rotation φ_{kx} about the x_k axis; and

a rotation φ_{kz} about the z_k axis;

wherein x_k and y_k are orthogonal axis to a vertical axis z_k of a lift cage based co-ordinate system.

13. Method according to claim 10, 11 or 12, wherein regulated linear motors or regulated rotary drives are used as the actuators.

14. Method according to anyone of claims 10 to 13, wherein the step of measuring the position of the lift cage relative to the guide rails includes to

AUSTRALIAN PATENT OFFICE

define a mid-position of the guide elements relative to their respective end settings and detecting noticeable deviations of the guide elements from their respective mid-positions when travelling along the guide rails, and wherein the position return movement implemented by the actuators on the respective guide elements in response to regulation by the second regulator ensures that the guide elements follow unevennesses of the rails while the lift cage maintains a substantially unaffected position thereby to provide sufficient damping travel for the guide elements when performing rapid lift cage acceleration return movement to counter oscillations regulated by the first regulator.

15. Method according to claim 14, wherein slow position return movement control by the first regulator is initiated each time a predetermined limit value lying between the mid-setting and one of the end-settings is exceeded.

16. Method according to anyone of claims 10 to 15, wherein the first regulator is operated in response to oscillations within a band width of 0.9 to 15 Hertz, and wherein the second regulator is operated in response to oscillations within a band width of 0.2 about 0.7 Hertz.

17. Apparatus for the reduction of oscillations of a lift cage of a lift system, substantially as hereinbefore described with reference to the accompanying drawings.

18. Method for the reduction of oscillations of a lift cage of a lift system substantially as hereinbefore described with reference to the accompanying drawings.

DATED this 24th day of December 1998

INVENTIO AG

WATERMARK PATENT AND TRADEMARK ATTORNEYS
UNIT 1, THE VILLAGE
RIVERSIDE CORPORATE PARK
39-117 DELHI ROAD
NORTH RYDE NSW 2113

CJS:RM DOC024 AU4791996.WPC

AUSTRALIAN PATENT OFFICE

Fig. 1

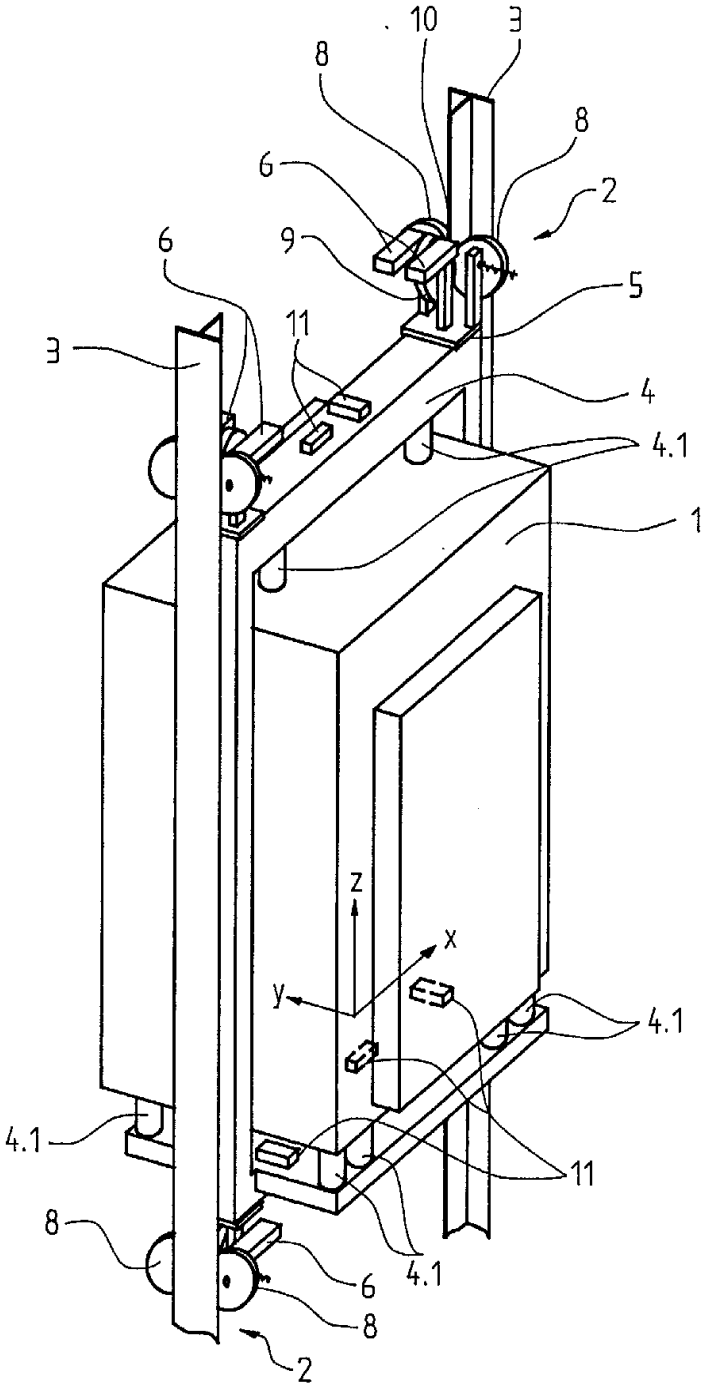

Fig. 2

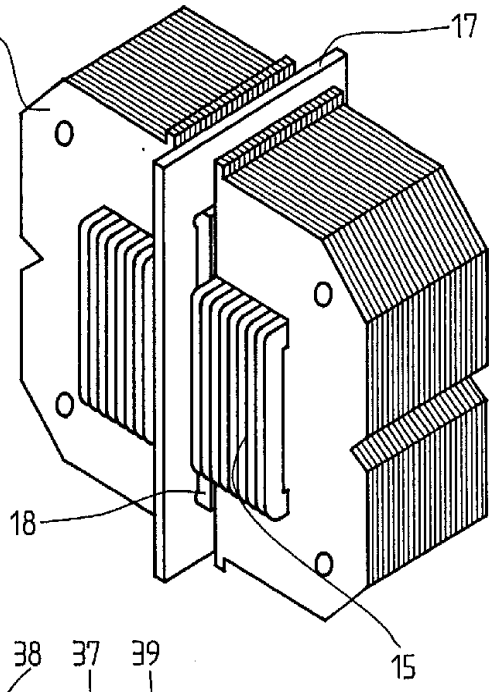

Fig. 4

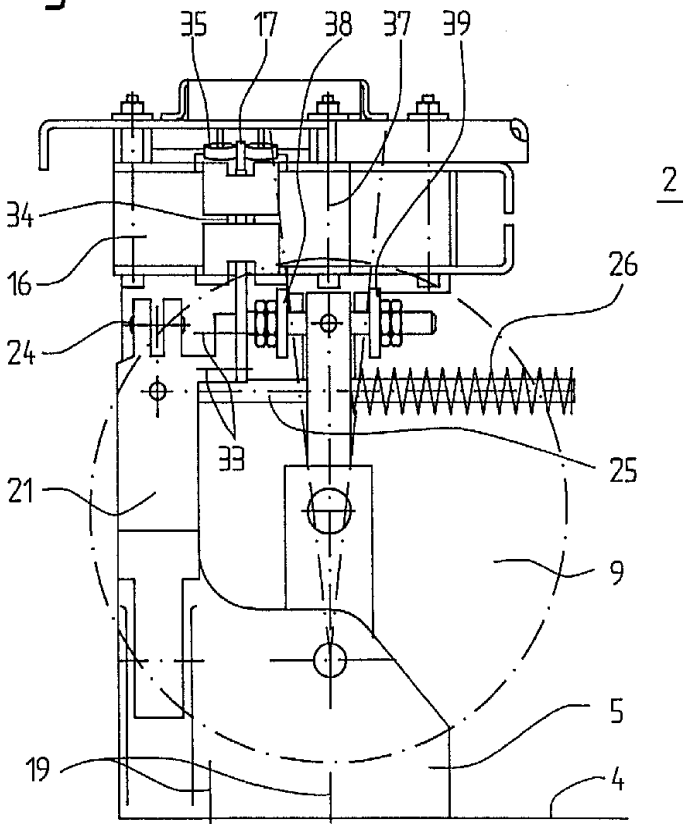

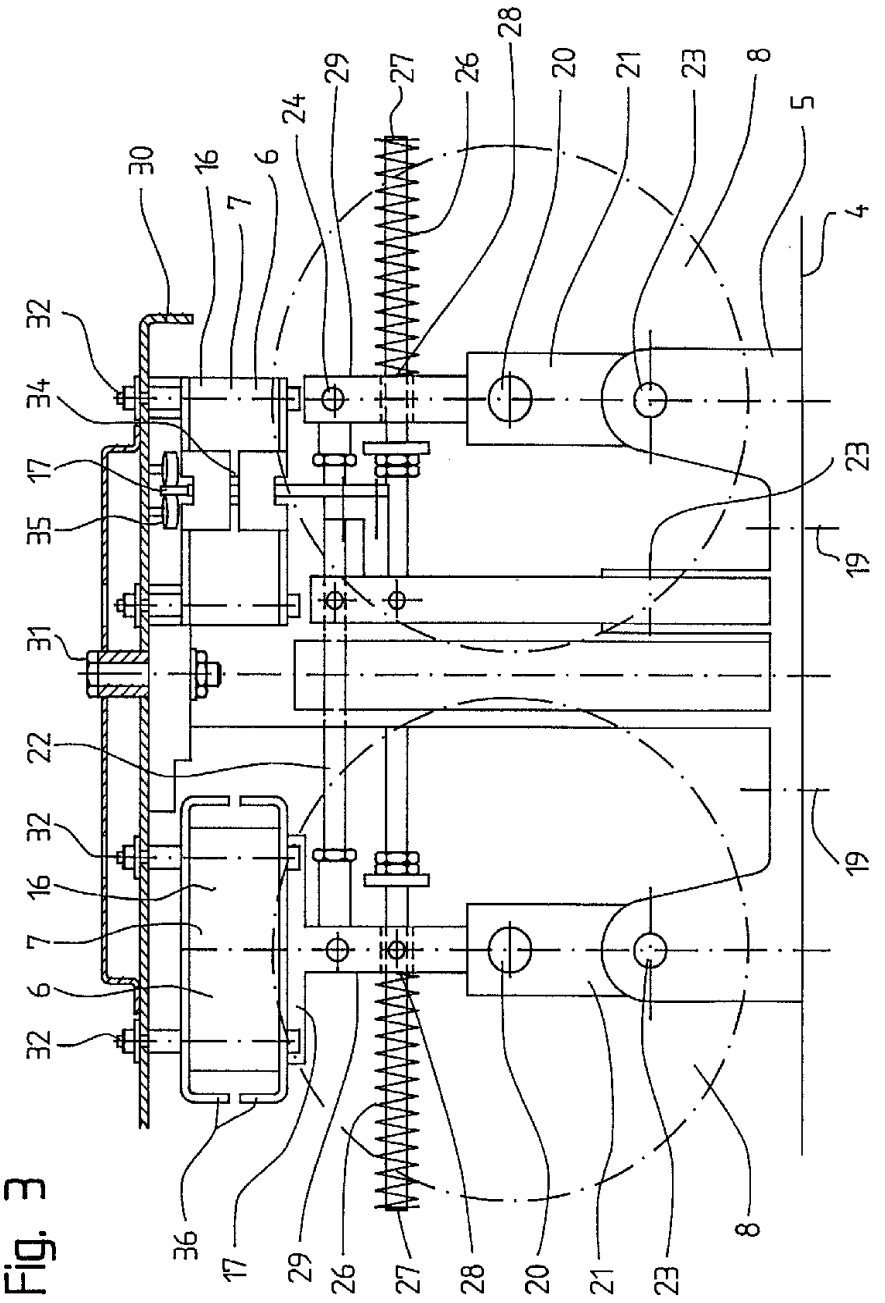
30
16
7
6
24
29
27
26
28
20
21
23
8
5
4
32
34
17
35
31
22
32
16
7
6
32
36
17
29
26
27
28
20
21
23
8
19
19
23

Fig. 3

Fig. 5a

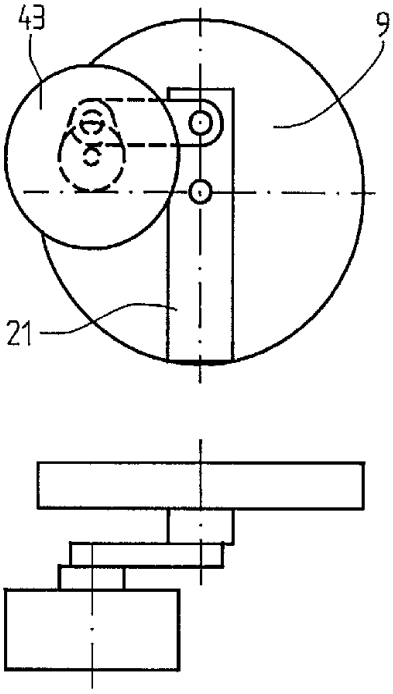

Fig. 5b

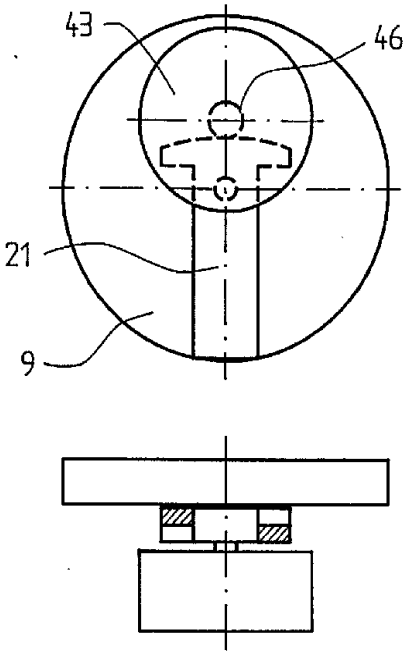

Fig. 5c

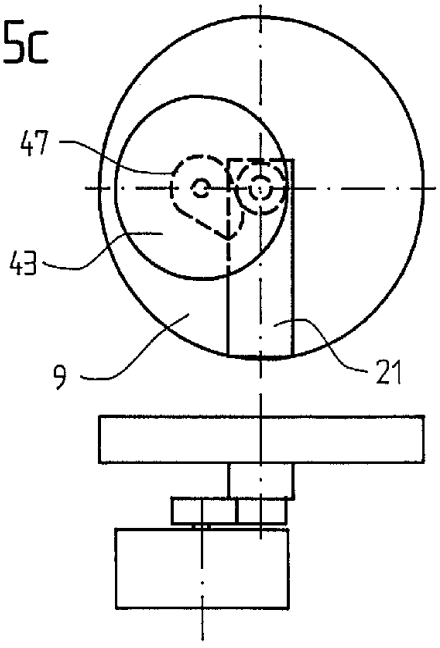

Fig. 6a

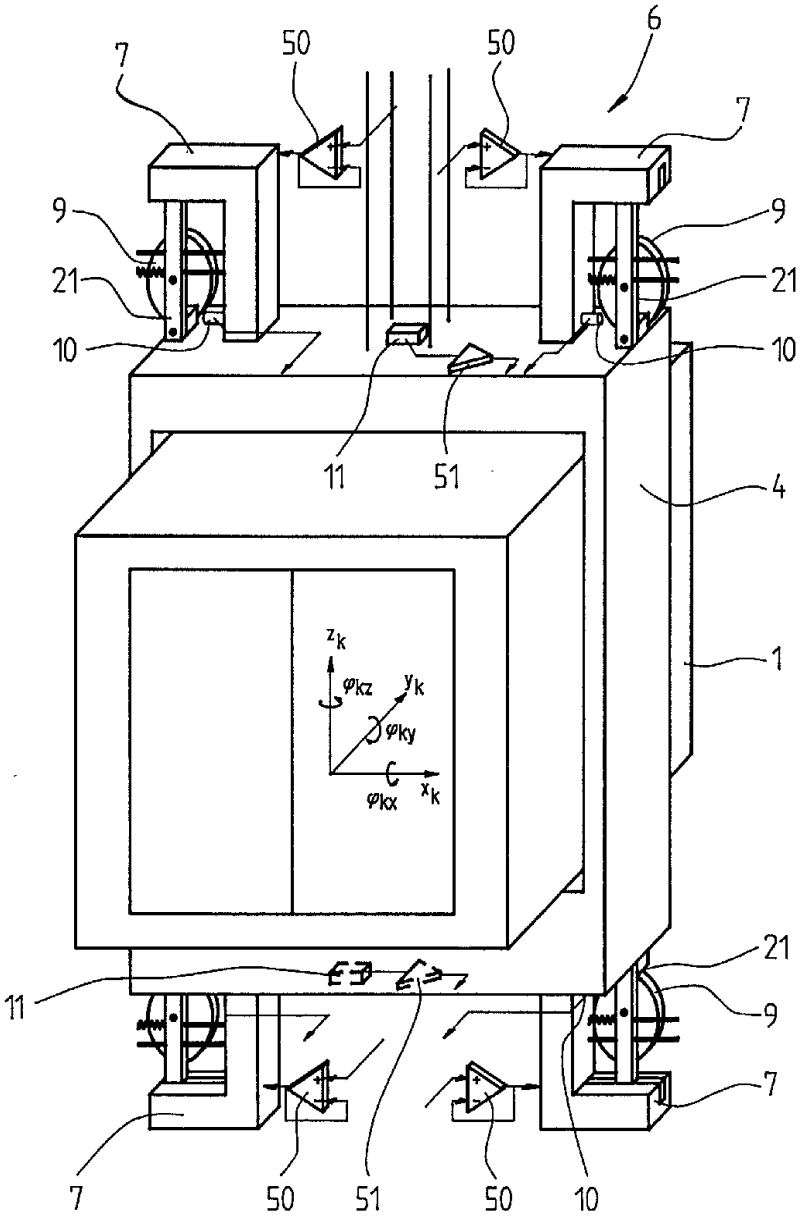
6
7
50
50
7
9
9
21
21
10
10
11
51
4
1
z_k
φ_{kz}
y_k
φ_{ky}
φ_{kx}
x_k
21
11
9
7
7
50
51
50
10

Fig. 6b

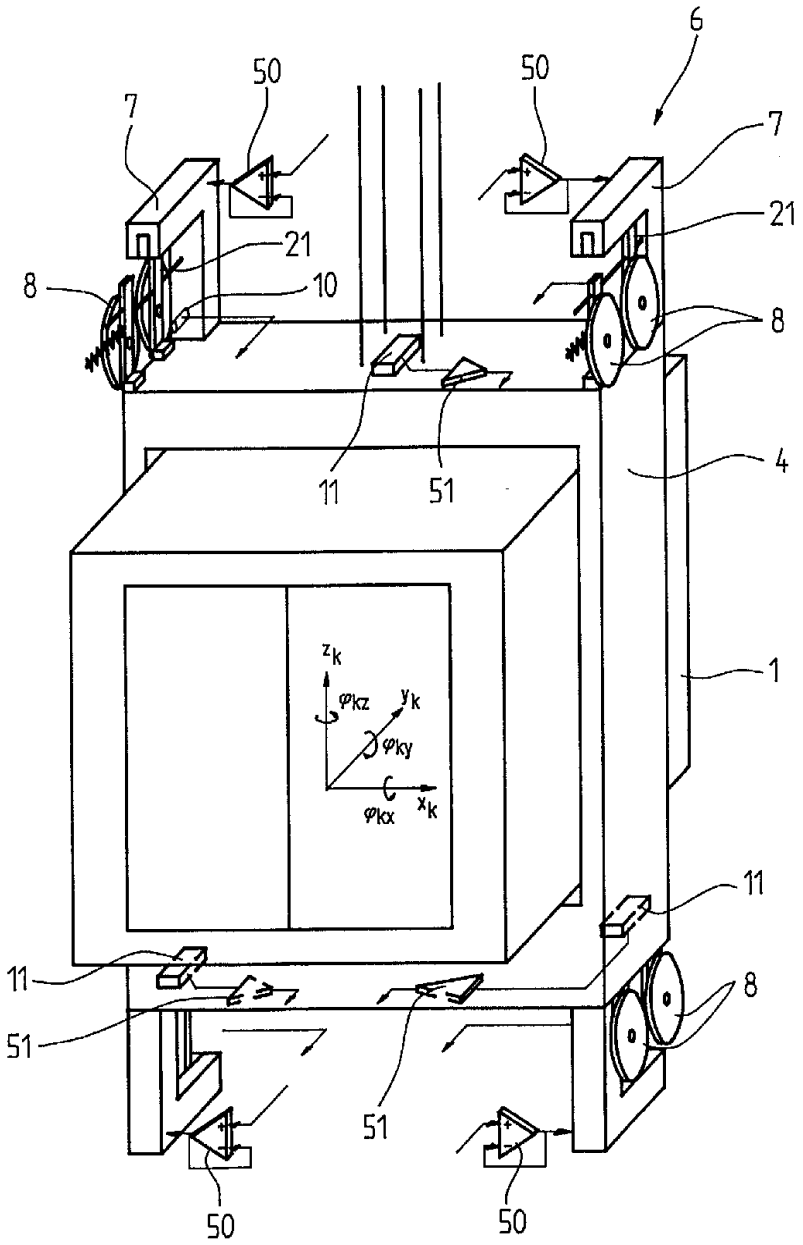
6
50
50
7
7
21
21
8
10
8
11
51
4
1
z_k
φ_{kz}
y_k
φ_{ky}
φ_{kx}
x_k
11
11
8
51
51
50
50

Fig. 7

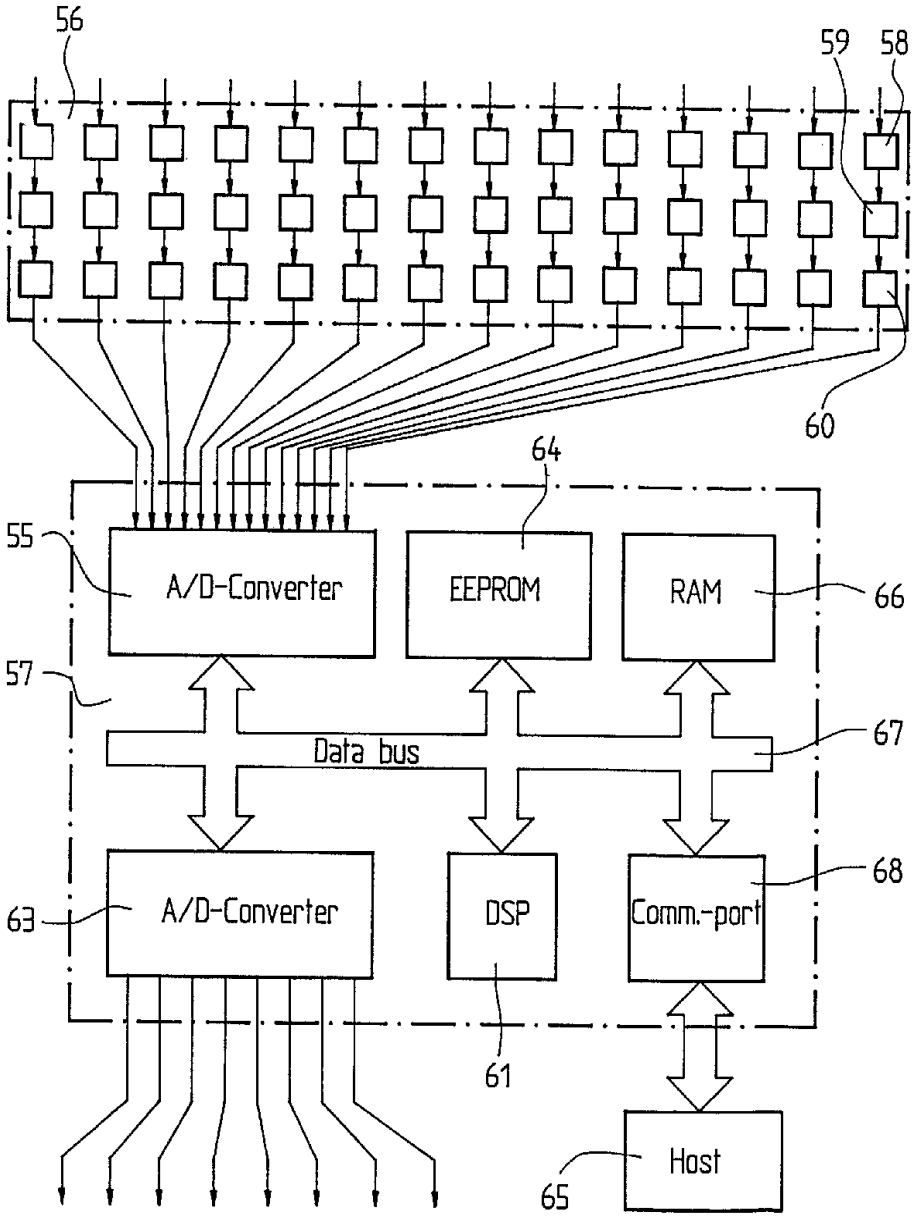
56
59
58
60
64
55
A/D-Converter
EEPROM
RAM
66
57
Data bus
67
68
63
A/D-Converter
DSP
Comm.-port
61
Host
65

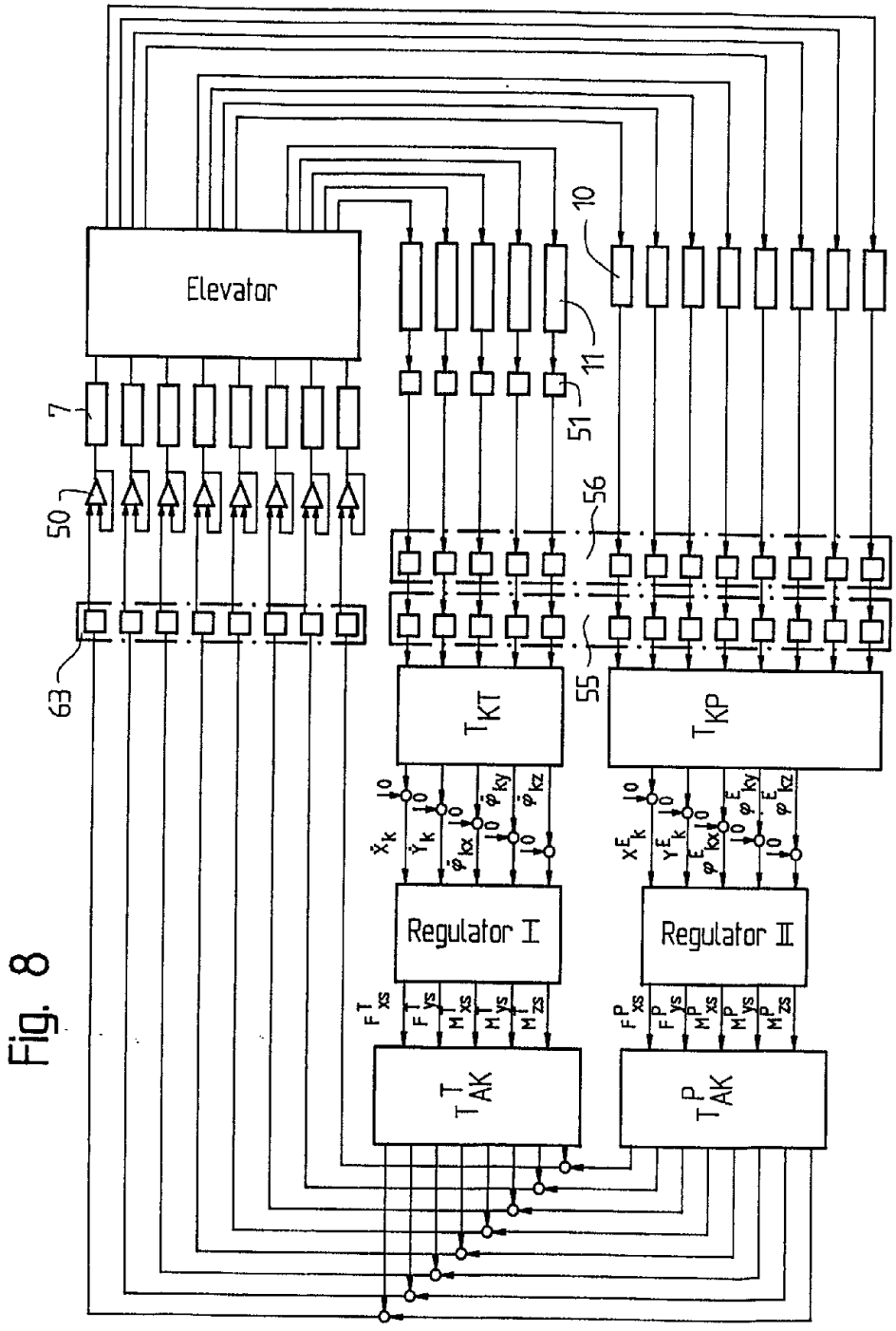
Elevator
10
11
51
7
50
56
63
55
T_{KT}
T_{KP}
Regulator I
Regulator II
T^{T}_{AK}
T^{P}_{AK}

Fig. 8